US012072049B2

(12) **United States Patent**
Mansour et al.

(10) **Patent No.: US 12,072,049 B2**
(45) **Date of Patent: *Aug. 27, 2024**

(54) **CONNECTOR COUPLING ASSEMBLY**

(71) Applicant: **CareFusion 303, Inc.**, San Diego, CA (US)

(72) Inventors: **George Mansour**, Diamond Bar, CA (US); **Raymond P. Feith**, Chino Hills, CA (US)

(73) Assignee: **CareFusion 303, Inc.**, San Diego, CA (US)

(*) Notice: Subject to any disclaimer, the term of this patent is extended or adjusted under 35 U.S.C. 154(b) by 0 days.

This patent is subject to a terminal disclaimer.

(21) Appl. No.: **18/329,073**

(22) Filed: **Jun. 5, 2023**

(65) **Prior Publication Data**

US 2023/0313928 A1 Oct. 5, 2023

Related U.S. Application Data

(63) Continuation of application No. 16/914,028, filed on Jun. 26, 2020, now Pat. No. 11,708,924.

(51) **Int. Cl.**
F16L 37/091 (2006.01)
A61M 39/10 (2006.01)
(Continued)

(52) **U.S. Cl.**
CPC ***F16L 37/091*** (2013.01); ***F16L 37/0985*** (2013.01); ***F16L 37/38*** (2013.01); *A61M 39/1011* (2013.01); *A61M 2039/1027* (2013.01)

(58) **Field of Classification Search**
CPC A61M 39/1011; A61M 39/105; A61M 39/1055; A61M 2039/1016;
(Continued)

(56) **References Cited**

U.S. PATENT DOCUMENTS

2,420,858 A 5/1947 Brownell
4,660,803 A * 4/1987 Johnston F16L 37/0985 285/24
(Continued)

FOREIGN PATENT DOCUMENTS

EP 1678070 A2 7/2006
EP 1517723 B1 1/2007
(Continued)

OTHER PUBLICATIONS

Bangert, Bill, "Shorter times to blood transfusion associated with decreased death risk in trauma patients", Medical Xpress, Apr. 14, 2016, https://medicalxpress.com/news/2016-04-shorter-blood-transfusion-decreased-death.html.
(Continued)

Primary Examiner — Kevin F Murphy
Assistant Examiner — Jonathan J. Waddy
(74) *Attorney, Agent, or Firm* — Morgan, Lewis & Bockius LLP

(57) **ABSTRACT**

Couplers are described herein. A coupler includes a coupler body, a plurality of first retaining fingers, and a plurality of second retaining fingers. The coupler body includes a first end and a second end, and defining a cavity, the cavity configured to receive a first connector and a second connector. The plurality of first retaining fingers are configured to engage against a collar of the first connector to prevent axial motion of the first connector relative to the coupler. The plurality of second retaining fingers are configured to engage against a shoulder of the second connector with a retention force, and release the second connector by radially expanding in response to a pullout force exerted on the second connector exceeding the retention force.

17 Claims, 2 Drawing Sheets

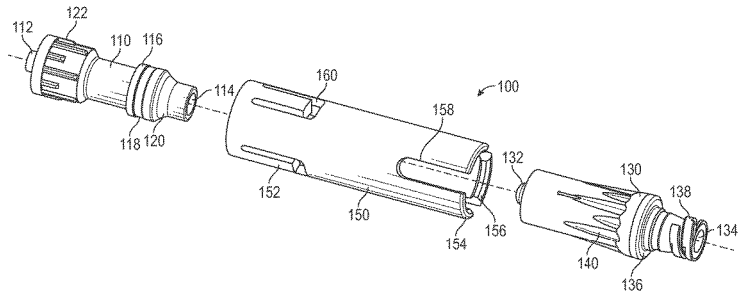

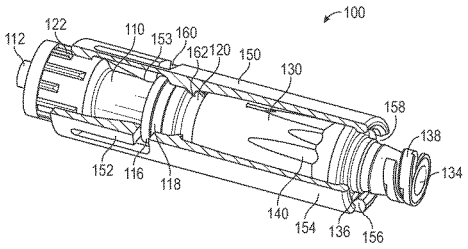

(51) **Int. Cl.**
F16L 37/098 (2006.01)
F16L 37/38 (2006.01)

(58) **Field of Classification Search**
CPC A61M 2039/1027; A61M 2039/1077; A61M 2039/1083; A61M 2039/1088; F16L 37/091; F16L 37/098; F16L 37/0985; F16L 37/133; F16L 37/38
USPC 251/149
See application file for complete search history.

(56) **References Cited**

U.S. PATENT DOCUMENTS

5,176,406 A 1/1993 Straghan
5,462,313 A 10/1995 Rea et al.
5,542,717 A 8/1996 Rea et al.
5,713,856 A 2/1998 Eggers et al.
6,106,028 A 8/2000 Godeau et al.
6,874,522 B2 4/2005 Anderson et al.
7,004,934 B2 2/2006 Vaillancourt
7,040,598 B2 5/2006 Raybuck
7,153,296 B2 12/2006 Mitchell
7,350,764 B2 4/2008 Raybuck
7,396,051 B2 7/2008 Baldwin et al.
7,763,013 B2 7/2010 Baldwin et al.
7,766,394 B2 8/2010 Sage et al.
7,794,675 B2 9/2010 Lynn
7,803,139 B2 9/2010 Fangrow, Jr.
7,803,140 B2 9/2010 Fangrow, Jr.
7,806,139 B2 10/2010 Packham et al.
7,815,614 B2 10/2010 Fangrow, Jr.
7,918,243 B2 4/2011 Diodati et al.
7,998,134 B2 8/2011 Fangrow et al.
8,123,738 B2 2/2012 Vaillancourt
8,142,418 B2 3/2012 McMichael et al.
8,211,069 B2 7/2012 Fangrow, Jr.
8,262,628 B2 9/2012 Fangrow, Jr.
8,361,408 B2 1/2013 Lynn
8,480,968 B2 7/2013 Lynn
8,777,908 B2 7/2014 Fangrow, Jr.
8,777,909 B2 7/2014 Fangrow, Jr.
8,795,256 B1 8/2014 Smith
8,888,758 B2 11/2014 Mansour
8,899,267 B2 12/2014 Diodati et al.
8,910,919 B2 12/2014 Bonnal et al.
8,974,425 B2 3/2015 Tachizaki et al.
8,974,437 B2 3/2015 Williams et al.
9,114,242 B2 8/2015 Fangrow et al.
9,126,028 B2 9/2015 Fangrow et al.
9,126,029 B2 9/2015 Fangrow et al.
9,192,753 B2 11/2015 Lopez et al.
9,234,616 B2 1/2016 Carrez et al.
9,358,379 B2 6/2016 Fangrow, Jr.
9,433,769 B2 9/2016 Bayly
9,468,749 B2 10/2016 Mansour et al.
9,492,649 B2 11/2016 Carrez et al.
9,636,492 B2 5/2017 Fangrow, Jr.
9,724,504 B2 8/2017 Fangrow, Jr. et al.
9,724,505 B2 8/2017 Williams et al.
9,861,805 B2 1/2018 Dennis et al.
9,933,094 B2 4/2018 Fangrow
9,974,939 B2 5/2018 Fangrow, Jr.
9,974,940 B2 5/2018 Fangrow, Jr.
10,029,086 B2 7/2018 Nowak et al.
10,156,306 B2 12/2018 Fangrow
10,173,045 B2 1/2019 Mansour
10,179,203 B1 1/2019 Huslage et al.
10,315,025 B2 6/2019 Phillips et al.
10,398,887 B2 9/2019 Fangrow, Jr. et al.
10,441,507 B2 10/2019 Sanders
10,518,078 B2 12/2019 Stjernberg Bejhed et al.
10,569,073 B2 2/2020 Hallisey et al.
10,625,068 B2 4/2020 Leuthardt et al.
10,655,768 B2 5/2020 Jones et al.
10,697,570 B2 6/2020 Fangrow
10,744,315 B2 8/2020 Sanders
10,842,982 B2 11/2020 Fangrow, Jr.
10,857,346 B2 12/2020 Dennis et al.
10,864,362 B2 12/2020 Jones et al.
10,881,847 B2 1/2021 Lynn
11,168,818 B2 11/2021 Fangrow
11,207,514 B2 12/2021 Kakinoki
11,235,135 B2 2/2022 Tsai
11,273,297 B2 3/2022 Kakinoki
11,484,471 B2 11/2022 Sanders
11,491,084 B2 11/2022 Ueda et al.
11,529,722 B2 12/2022 Kujawski, Jr. et al.
2004/0215158 A1 10/2004 Anderson
2005/0015075 A1* 1/2005 Wright A61M 39/14 604/535
2005/0090805 A1 4/2005 Shaw et al.
2006/0129109 A1 6/2006 Shaw et al.
2007/0088292 A1 4/2007 Fangrow, Jr.
2007/0088293 A1 4/2007 Fangrow, Jr.
2007/0088294 A1 4/2007 Fangrow, Jr.
2007/0225635 A1 9/2007 Lynn
2008/0039803 A1 2/2008 Lynn
2008/0177237 A1 7/2008 Stonehouse
2011/0106046 A1 5/2011 Hiranuma
2014/0207118 A1* 7/2014 Tsoukalis A61M 39/18 604/535
2014/0249487 A1 9/2014 Lynn
2014/0330254 A1 11/2014 Rosenberger et al.
2016/0000363 A1 1/2016 Jones et al.
2018/0200147 A1 7/2018 Sanders
2019/0184152 A1 6/2019 Kakinoki
2019/0282797 A1 9/2019 Tsai
2020/0113784 A1 4/2020 Lopez et al.
2020/0179672 A1 6/2020 Kakinoki
2020/0215319 A1 7/2020 Fangrow, Jr. et al.
2020/0284385 A1 9/2020 Fangrow
2020/0323734 A1 10/2020 Ueda et al.
2020/0338331 A1 10/2020 Sanders
2021/0069484 A1 3/2021 Tsa
2021/0077803 A1 3/2021 Lynn
2021/0252267 A1 8/2021 Fangrow, Jr.
2021/0388926 A1 12/2021 Martin et al.
2021/0393938 A1 12/2021 Lynn et al.
2022/0260189 A1 8/2022 Deuse
2022/0282814 A1 9/2022 Fangrow
2022/0288378 A1 9/2022 Mermelshtein et al.
2024/0115464 A1* 4/2024 Deckard A61J 15/0015

FOREIGN PATENT DOCUMENTS

EP 1622675 B1 8/2009
EP 2144634 A1 1/2010
EP 2298407 A1 3/2011
EP 2694132 A1 2/2014
EP 2562456 B1 6/2014
EP 2782633 A1 10/2014
EP 1842002 B1 4/2015
EP 2736582 B1 5/2015
EP 2089094 B1 1/2016
EP 2219721 B1 12/2017
EP 2753396 B1 12/2017
EP 2736584 B1 4/2018
EP 3305361 A1 4/2018
EP 2271398 B1 11/2018
EP 2480281 B1 11/2018
EP 2790750 B1 11/2018
EP 2331191 B1 3/2019
EP 3079756 B1 3/2019
EP 2121114 B1 5/2019
EP 2719419 B1 5/2019
EP 2956204 B1 8/2019
EP 3421077 B1 8/2019
EP 3530313 A1 8/2019
EP 3538201 A1 9/2019
EP 3570807 A1 11/2019
EP 3570809 A1 11/2019
EP 2536463 B1 4/2020

(56) **References Cited**

FOREIGN PATENT DOCUMENTS

EP	3381505	B1	5/2020
EP	3538201	B1	5/2020
EP	1904152	B1	12/2020
EP	2150307	B1	12/2020
EP	3313490	B1	1/2021
EP	3760275	A1	1/2021
EP	3851155	A1	7/2021
EP	3517164	B1	9/2021
EP	3954355	A1	2/2022
EP	3960229	A1	3/2022
EP	3973044	A1	3/2022
EP	3305361	B1	5/2022
EP	3134052	B1	8/2022
EP	3530313	B1	8/2022
WO	WO-2006122406	A1	11/2006
WO	WO-2018022631	A	2/2018
WO	WO-2021099437	A1	5/2021
WO	WO-2021180675	A1	9/2021
WO	WO-2021252197	A1	12/2021
WO	WO-2022042956	A1	3/2022
WO	WO-2022149339	A1	7/2022
WO	WO-2022207560	A1	10/2022

OTHER PUBLICATIONS

Ivteam, "Force-activated separation IV connectors", 2022, Retrieved from the internet https://www.ivteam.com/intravenous-literature/force-activated-separation-iv-connectors/ [Last retrieved Jan. 13, 2023].

Lineus Medical, SafeBreak Product Features and Benefits Brochure, May 2021, mkg 0058 May 2021 Rev. 02.

Przen, "Lineus Medical Goes International, Signs ONEY for Distribution in Korea", PRZen Online Press Release Distribution, PrZen/33448014, MKG-0130 Rev 00, Retrieved from the internet https://przen.com/pr/lineus-medical-goes-international-signs-oney-for-distribution-in-korea-przen-33448014 [Last retrieved Jan. 13, 2023].

Rickard, et al., "Securing All intraVenous devices Effectively in hospitalised patients—the SAVE trial: study protocol for a multicentre randomised controlled trial", BMJ Open, Sep. 23, 2015;5(9):e008689, doi: 10.1136/bmjopen-2015-008689. PMID: 26399574; PMCID: PMC4593168.

Tada Group AB, LinkedIn Post "ReLink granted patent in Japan", LinkedIn, Mar. 2022, retrieved from the internet https://se.linkedin.com/company/tadamedical?trk=public_post_reshare_feed-actor-image&original_referer= [Last retrieved Mar. 2022].

International Search Report and Written Opinion for Application No. PCT/US2021/039238, dated Oct. 7, 2021, 13 pages.

* cited by examiner

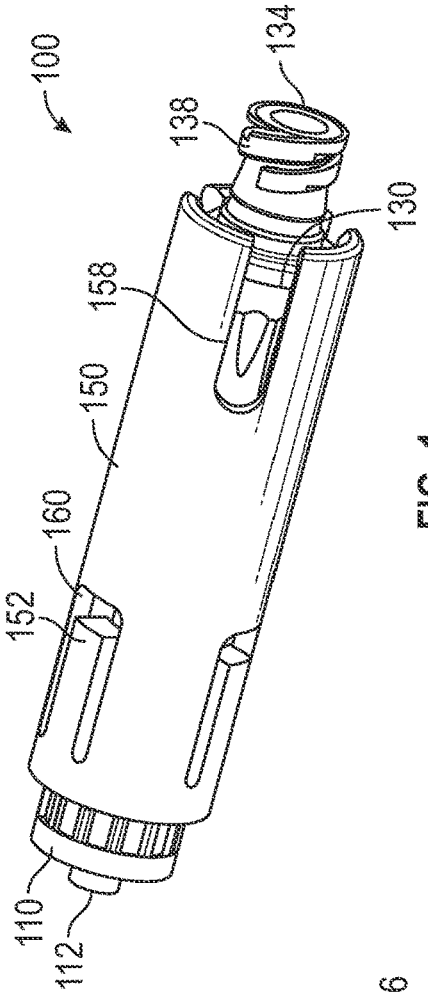
100
134
138
130
158
150
160
152
110
112

FIG. 1

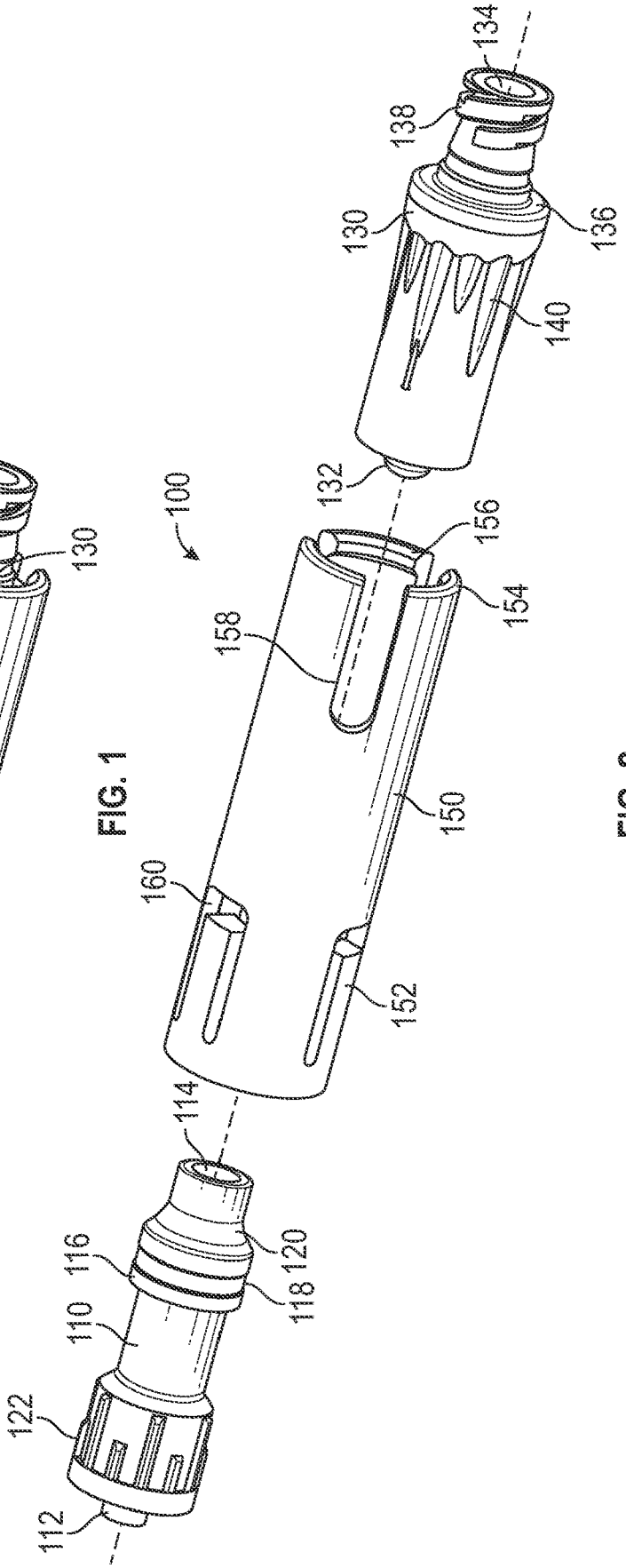
134
138
130
136
140
132
100
156
154
158
150
160
152
114
120
116
118
110
122
112

FIG. 2

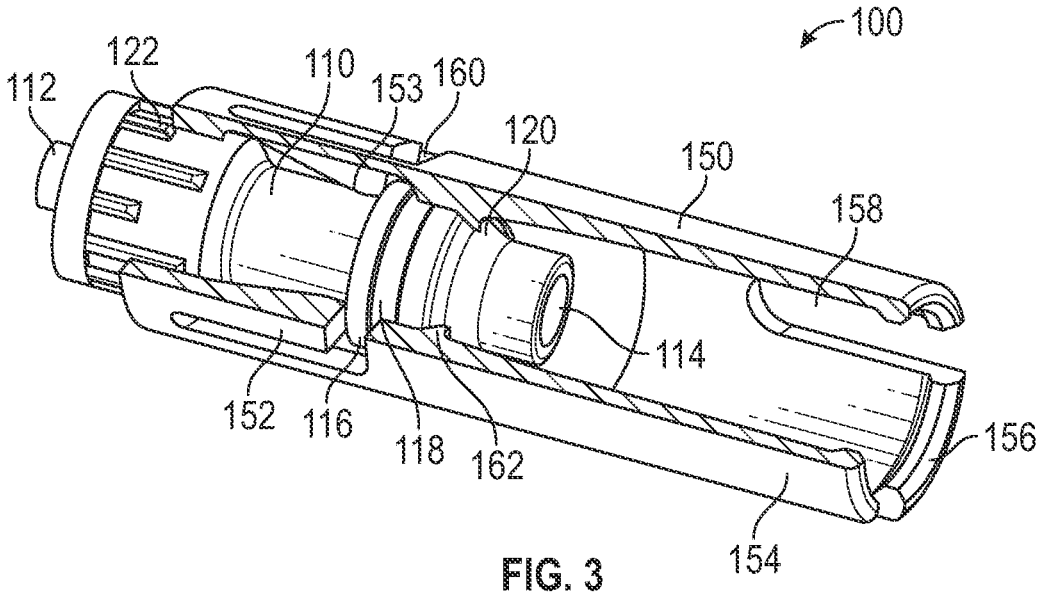
100
112
122
110
153
160
120
150
158
114
152
116
118
162
156
154

FIG. 3

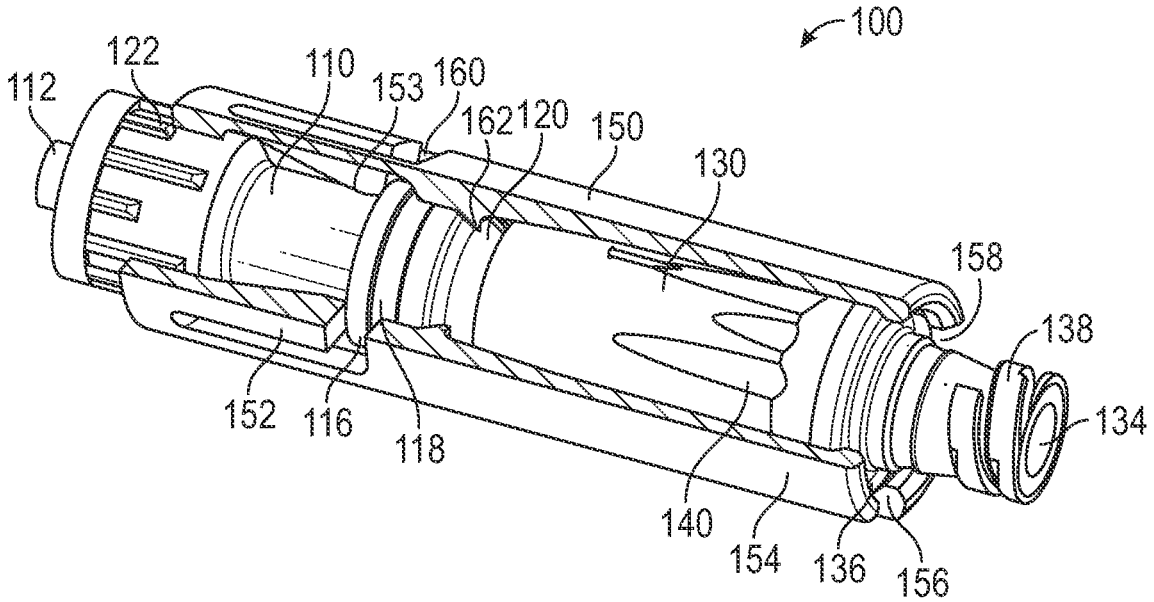
100
112
122
110
153
160
162
120
150
130
158
138
134
152
116
118
140
154
136
156

FIG. 4

CONNECTOR COUPLING ASSEMBLY

CROSS REFERENCE TO RELATED APPLICATION

This application is a continuation of U.S. patent application Ser. No. 16/914,028, entitled "CONNECTOR COUPLING ASSEMBLY", filed Jun. 26, 2020, the disclosure of which is incorporated herein by reference in its entirety.

FIELD OF THE INVENTION

Background

Medical treatments often include the infusion of a medical fluid (e.g., a saline solution or a liquid medication) to patients using an intravenous (IV) catheter that is connected though an arrangement of flexible tubing and fittings, commonly referred to as an "IV set," to a source of fluid, for example, an IV bag. Often, tubing or catheters are coupled or secured to each other to allow fluid communication between various portions of tubing or catheters.

In some applications, such tubing or catheters may become dislodged due to improper securement and/or when the coupling is subject to forces greater than what the coupling is designed to withstand.

SUMMARY

The disclosed subject matter relates to connector couplers. In certain embodiments, a coupler is disclosed that comprises a coupler body comprising a first end and a second end, and defining a cavity, the cavity configured to receive a first connector and a second connector; a plurality of first retaining fingers disposed adjacent to the first end and extending radially inward into the cavity, wherein the plurality of first retaining fingers are radially biased inward toward the cavity and are configured to engage against a collar of the first connector to prevent axial motion of the first connector relative to the coupler; a plurality of second retaining fingers disposed at the second end and extending radially inward into the cavity, wherein the plurality of second retaining fingers are radially biased inward toward the cavity and are configured to: engage against a shoulder of the second connector with a retention force; and release the second connector by radially expanding in response to a pullout force exerted on the second connector exceeding the retention force.

In certain embodiments, a coupler assembly is disclosed that comprises a first connector, comprising: a first connector body with a first inlet configured to be coupled to a first portion of tubing and a first outlet in fluid communication with the first inlet; and a collar disposed between the first inlet and the first outlet, wherein the collar radially extends from the first connector body; a second connector, comprising: a second connector body with a second inlet configured to be releasably coupled with the first outlet of the first connector, and a second outlet configured to be coupled to a second portion of tubing and in fluid communication with the second inlet; and a shoulder disposed between the second inlet and the second outlet, wherein the shoulder radially extends from the second connector body; and a coupler, comprising: a coupler body comprising a first end and a second end, and defining a cavity, wherein the first connector and the second connector are at least partially disposed within the cavity; a plurality of first retaining fingers disposed adjacent to the first end and extending radially inward into the cavity, wherein the plurality of first retaining fingers are radially biased inward to engage against the collar of the first connector to prevent axial motion of the first connector relative to the second connector; and a plurality of second retaining fingers disposed at the second end and extending radially inward into the cavity, wherein the plurality of second retaining fingers are radially biased inward engage against the shoulder of the second connector with a retention force, and the plurality of second retaining fingers are configured to release the second connector by radially expanding in response to a pullout force exerted on the second connector exceeding the retention force.

In certain embodiments, a method is disclosed that comprises inserting a portion of a first connector into a cavity of a coupler, wherein the first connector is coupled to a first portion of tubing; biasing a plurality of first retaining fingers radially inward to engage against a collar of the first connector; inserting a portion of a second connector into the cavity from an opposite end of the coupler, wherein the second connector is coupled to a second portion of tubing; coupling an outlet of the first connector with an inlet of the second connector, permitting fluid communication between the first portion of tubing and the second portion of tubing; and biasing a plurality of second retaining fingers radially inward to engage against a shoulder of the second connector with a retention force.

It is understood that various configurations of the subject technology will become readily apparent to those skilled in the art from the disclosure, wherein various configurations of the subject technology are shown and described by way of illustration. As will be realized, the subject technology is capable of other and different configurations and its several details are capable of modification in various other respects, all without departing from the scope of the subject technology. Accordingly, the summary, drawings and detailed description are to be regarded as illustrative in nature and not as restrictive.

BRIEF DESCRIPTION OF THE DRAWINGS

The accompanying drawings, which are included to provide further understanding and are incorporated in and constitute a part of this specification, illustrate disclosed embodiments and together with the description serve to explain the principles of the disclosed embodiments. In the drawings:

FIG. **1** is a perspective view of a coupler assembly, in accordance with various aspects of the present disclosure.

FIG. **2** is an exploded perspective view of the coupler assembly of FIG. **1**, in accordance with various aspects of the present disclosure.

FIG. **3** is a cross-sectional view of the coupler assembly of FIG. **1** with the second connector omitted, in accordance with various aspects of the present disclosure.

FIG. **4** is a cross-sectional view of the coupler assembly of FIG. **1**, in accordance with various aspects of the present disclosure.

DETAILED DESCRIPTION

The disclosed coupler incorporates a plurality of first retaining fingers and a plurality of second retaining fingers. The plurality of first retaining fingers can be configured to engage against a collar of the first connector to prevent axial motion of the first connector. The plurality of second retaining fingers can be configured to engage against the shoulder of the second connector, preventing axial motion of the

second connector. By preventing axial motion of the first and second connectors, the coupler can prevent unintended or accidental dislodgement of the first and second connectors. Further, the plurality of second retaining fingers can be configured to release the second connector in response to a pullout force. By allowing the second connector to be removed in response to a pullout force, the second connector can be removed if needed by applying an increased pullout force.

The detailed description set forth below is intended as a description of various configurations of the subject technology and is not intended to represent the only configurations in which the subject technology may be practiced. The detailed description includes specific details for the purpose of providing a thorough understanding of the subject technology. However, it will be apparent to those skilled in the art that the subject technology may be practiced without these specific details. In some instances, well-known structures and components are shown in block diagram form in order to avoid obscuring the concepts of the subject technology. Like components are labeled with identical element numbers for ease of understanding. Reference numbers may have letter suffixes appended to indicate separate instances of a common element while being referred to generically by the same number without a suffix letter.

While the following description is directed to the connection of medical fittings for the administration of medical fluid using the disclosed coupler, it is to be understood that this description is only an example of usage and does not limit the scope of the claims. Various aspects of the disclosed coupler may be used in any application where it is desirable to secure the connection of various tubing and fittings.

The disclosed coupler overcomes several challenges discovered with respect to certain conventional couplers. One challenge with certain conventional couplers is that certain conventional couplers may be improperly secured. Further, during use, certain conventional couplers may be designed to release or dislodge in response to relatively low pullout forces. For example, certain conventional couplers may release in response to pullout forces experienced during patients rolling over in bed, patients catching tubing or lines on bed rails, moving patients to a different bed, fidgeting by pediatric patients, and/or disoriented adult patients pulling out their lines. Indeed, the Association for Vascular Access (AVA) Annual Scientific Meeting in 2017 reported a 10% dislodgement rate for 1,000 patients fitted with peripheral IV catheters, translating to approximately 33 million dislodgements per year in the U.S. alone. Because the accidental or unintentional dislodgement of tubing, catheters, or fittings may interrupt the administration of medical fluids, the use of certain conventional couplers is undesirable.

Therefore, in accordance with the present disclosure, it is advantageous to provide a coupler as described herein that allows for improved securement of fittings or connectors. The disclosed coupler provides a plurality of first retaining fingers and a plurality of second retaining fingers that permits the secure retention of the connectors, while allowing intentional removal of the connector as required.

Examples of couplers that allow secure retention of connectors are now described.

FIG. **1** is a perspective view of a coupler assembly **100**, in accordance with various aspects of the present disclosure. FIG. **2** is an exploded perspective view of the coupler assembly **100** of FIG. **1**, in accordance with various aspects of the present disclosure. With reference to FIGS. **1** and **2**, the coupler assembly **100** allows the flow of a fluid, such as a medical fluid, from a fluid source to a patient by releasably coupling a portion of tubing or line with another portion of tubing or line in fluid communication.

In the depicted example, portions of tubing can be terminated with connectors, such as an upper connector **110** and/or a lower connector **130**. The upper connector **110** and/or the lower connector **130** can allow for the connection and/or disconnection of tubing to allow for selective fluid communication therebetween.

As illustrated, a first portion of tubing can be terminated by the upper connector **110** to allow the first portion of tubing to be connected and/or disconnected with a mating connector, such as the lower connector **130**. In some embodiments, a portion of tubing can be coupled with, or engage with an inlet **112** of the upper connector **110**. The inlet **112** can be in fluid communication with the tubing to allow fluid to pass through the upper connector **110**. In some embodiments, the inlet **112** can have a flat surface to allow for clinicians to easily clean and disinfect the inlet **112**. Fluid can exit or flow through the upper connector **110** via an outlet **114** disposed opposite to the inlet **112**. The flow path through the upper connector **110** can have a straight fluid pathway to make flushing easier and to reduce the risk of hemolysis. Optionally, the upper connector **110** can include raised features **122** disposed on the surface of the upper connector **110** to allow a clinician to more easily handle or manipulate the upper connector **110**. Some embodiments of the upper connector **110** can provide connectors that are compatible with connectors of other portions of fluid delivery systems. Examples of the upper connector **110** can include the SmartSite™ connector, the Max Zero connector, and the MaxPlus connector.

Similarly, a second portion of tubing can be terminated by the lower connector **130** to allow the second portion of tubing to be connected and/or disconnected with a mating connector, such as the upper connector **110**. In some embodiments, a portion of tubing can be coupled with, or engage with an outlet **134** of the lower connector **130**. In some embodiments, the outlet **134** can include a threaded luer connection **138** to facilitate coupling with tubing.

The tubing can be in fluid communication with the outlet **134** to allow the tubing to receive flow passing through the lower connector **130**. The lower connector **130** can receive fluid flow from the inlet **132** disposed opposite to the outlet **134**. In some embodiments, the lower connector **130** can include a no-drip feature to prevent leaks or surface contamination. The lower connector can further include a luer lock to prevent accidental discharges. Optionally, the lower connector **130** can include raised features **140** disposed on the surface of the lower connector **130** to allow a clinician to more easily handle or manipulate the lower connector **130**. Examples of the lower connector **130** can include the Texium® connector.

In some embodiments, the outlet **114** of the upper connector **110** and/or the inlet **132** of the lower connector **130** can include features that allow for the outlet **114** to mate with an inlet **132**. For example, the outlet **114** can fit together or otherwise engage with the inlet **132** to allow fluid communication between the upper connector **110** and the lower connector **130** and the portions of tubing coupled thereto. As can be appreciated, the upper connector **110** and the lower connector **130** can be coupled and decoupled to permit fluid communication as desired. As illustrated, the outlet **114** can include an outer portion that is smooth and otherwise free from threads. The outlet **114** can include an outer portion that includes threads to facilitate coupling with the lower connector **130**. As can be appreciated, the upper connector **110** can couple with the lower connector **130** to

provide needle free connections. Advantageously, the upper connector **110** can pair with a lower connector to form a leak-free closed system, allowing the delivery of hazardous drugs. For example, a SmartSite™ connector can connect to a Texium® connector to provide a closed system that prevents hazardous drugs from leaking or dripping.

In some embodiments, the upper connector **110** can include a sealing valve to allow for flow to pass therethrough when the outlet **114** is coupled to a mating connector, and can prevent or restrict flow when the upper connector **110** is disconnected from a mating connector. In some embodiments, the upper connector **110** can include a sealing valve to seal the flow path between the inlet **112** and the outlet **114** when the outlet **114** is uncoupled from a mating connector. The sealing valve can be moved to an open position when a mating connector is coupled to the outlet **114**, allowing flow between the inlet **112**, the outlet **114**, and into the mating connector.

Similarly, the lower connector **130** can include a sealing valve to allow for flow to pass therethrough when the inlet **132** is coupled to a mating connector, and can prevent or restrict flow when the lower connector **130** is disconnected from a mating connector. The lower connector **130** may include a sealing valve to seal the flow path between the inlet **132** and the outlet **134** when the inlet **132** is uncoupled from a mating connector. Further, the sealing valve can be moved to an open position when a mating connector is coupled to the inlet **132**, allowing flow into the lower connector **130** and between the inlet **132** and the outlet **134**. Some embodiments provide that portions of the sealing valve can be formed from silicone.

FIG. **3** is a cross-sectional view of the coupler assembly **100** of FIG. **1** with the lower connector **130** omitted, in accordance with various aspects of the present disclosure. With reference to FIGS. **1-3**, the coupler **150** can secure the upper connector **110** and the lower connector **130** in a coupled position to allow secured fluid communication therebetween that may not be accidently or unintentionally interrupted. In the depicted example, the coupler **150** can retain or secure the upper connector **110** and/or the lower connector **130** by engaging with features of the upper connector **110** and/or the lower connector **130**.

As illustrated, the coupler **150** can have a generally tubular body, extending between a first end configured to receive the upper connector **110** and a second end configured to receive the lower connector **130**. The coupler **150** can define a cavity therein, which allows for portions of the upper connector **110** and/or the lower connector **130** to be disposed within the coupler **150**.

In the depicted example, the upper connector **110** can be inserted into the cavity of the coupler **150** to engage with the coupler **150** and prevent unwanted dislodgment of the upper connector **110**. As illustrated, the outlet **114** end of the upper connector **110** is guided into the cavity through a first end of the coupler **150** to a desired axial position relative to the coupler **150**. For example, the upper connector **110** can be axially positioned within the coupler **150** to allow the outlet **114** to engage or couple with the inlet **132** of the lower connector **130**, when the lower connector **130** is inserted. Advantageously, the upper connector **110** can be axially positioned within the coupler **150**, such that the outlet **114** is recessed within the cavity, preventing touch contamination of the outlet **114** by patients, clinicians, etc., when the upper connector **110** is not coupled to the lower connector **130**.

In some embodiments, features within the coupler **150** can position the upper connector **110** within the cavity of the coupler **150**. Optionally, the coupler **150** can include a tapered alignment feature **162** to radially align the outlet **114** and/or the upper connector **110** generally within the cavity of the coupler **150**. The tapered alignment feature **162** can extend from the walls of the coupler **150** into the cavity and have a generally conical shape that radially converges. Therefore, as the upper connector **110** is inserted or advanced into the coupler **150**, the tapered alignment feature **162** can radially guide the upper connector **110** within the cavity.

In some embodiments, the upper connector **110** can include a frustroconical or tapered portion **120** to engage or interface with the tapered alignment feature **162** of the coupler **150**. The tapered portion **120** can slide along the tapered alignment feature **162** to radially align the upper connector **110** within the coupler **150**. The tapered portion **120** can be disposed between the inlet **112** and the outlet **114** of the upper connector **110**. In some embodiments, the tapered portion **120** can be disposed near the outlet **114** of the upper connector **110**.

As the upper connector **110** is inserted into the coupler **150**, features of the coupler **150** can retain the upper connector **110** in the inserted position. In some embodiments, the coupler **150** can axially retain the upper connector **110**, while permitting the upper connector **110** to rotate relative to the coupler **150**. Optionally, the coupler **150** can rotationally retain the upper connector **110** relative to the coupler **150**.

In the depicted example, the coupler **150** can include a plurality of first retaining fingers **152** to engage or retain the upper connector **110** in the inserted or coupled axial position. In some embodiments, the plurality of first retaining fingers **152** are radially movable to allow the upper connector **110** to be inserted into the coupler **150**. The plurality of first retaining fingers **152** can move in and out of the cavity defined by the coupler **150**.

As illustrated, the plurality of first retaining fingers **152** can be hinged relative to the coupler **150** body. In some embodiments, the plurality of first retaining fingers **152** are integrally formed with the coupler **150**. Optionally, slots or windows **160** are cut around the material of the coupler **150** to form the plurality of first retaining fingers **152**. The plurality of first retaining fingers **152** can be circumferentially spaced apart around the coupler **150**. Optionally, the plurality of first retaining fingers **152** can be disposed in groups or sets around the coupler **150**. In some embodiments, the plurality of first retaining fingers **152** can be spaced apart from the end of the coupler **150** that receives the upper connector **110**.

In the depicted example, the plurality of first retaining fingers **152** can be biased radially inward to engage or retain the upper connector **110** within the coupler **150**. The plurality of first retaining fingers **152** can apply a radial spring force against the upper connector **110** to retain the upper connector **110** within the coupler **150**. As can be appreciated, the spring force of the plurality of first retaining fingers **152** can correspond to the retention force exerted upon the upper connector **110**. The plurality of first retaining fingers **152** can elastically deform to engage against the upper connector **110**.

In some embodiments, the plurality of first retaining fingers **152** can each include a protrusion or protruding feature **153** to engage with features of the upper connector **110**. The protruding feature **153** can extend radially inward to contact the upper connector **110**. For example, the plurality of first retaining fingers **152** and/or the protruding feature **153** can engage against a collar **116** of the upper connector **110**.

Optionally, the upper connector **110** can include a collar **116** that can be a radially raised portion that extends from the upper connector **110**. The collar **116** can be disposed between the inlet **112** and the outlet **114**. As illustrated, the collar **116** can be disposed toward the outlet **114**. Optionally, the collar **116** can include a groove or recess **118** disposed within the collar **116**.

In the depicted example, the plurality of first retaining fingers **152** and/or the protruding feature **153** can engage against the collar **116** to prevent axial movement of the upper connector **110** relative to the coupler **150**. During insertion, after the collar **116** moves past the plurality of first retaining fingers **152** and/or the protruding feature **153**, the plurality of first retaining fingers **152** can move radially inward, axially bearing against the axial surface of the collar **116** and thereby retaining the upper connector **110**. In some embodiments, the protruding feature **153** of each of the plurality of first retaining fingers **152** can engage against the collar **116**. Optionally, the protruding feature **153** can have a generally square or axial-facing surface bearing against the collar **116**, preventing radial expansion of the plurality of first retaining fingers **152** in response to axial (pullout) force exerted against the upper connector **110**.

FIG. **4** is a cross-sectional view of the coupler assembly **100** of FIG. **1**, in accordance with various aspects of the present disclosure. With reference to FIGS. **1-4**, in the depicted example, the lower connector **130** can be inserted into the cavity of the coupler **150** to engage with the coupler **150** and the upper connector **110** and to prevent or resist unwanted dislodgment with the upper connector **110**. As illustrated, the inlet **132** end of the lower connector **130** is guided into the cavity through a second end of the coupler **150** to a desired axial position relative to the coupler **150**. For example, lower connector **130** can be axially positioned within the coupler **150** to allow the inlet **132** to engage or couple with the outlet **114** of the upper connector **110**. In some embodiments, features within the coupler **150** can position lower connector **130** within the cavity of the coupler **150**.

As the lower connector **130** is inserted into the coupler **150**, features of the coupler **150** can retain the lower connector **130** in the inserted position. In some embodiments, the coupler **150** can axially retain the lower connector **130**, while permitting the lower connector **130** to rotate relative to the coupler **150** and the upper connector **110**. Optionally, the coupler **150** can rotationally retain the lower connector **130** relative to the coupler **150**.

In the depicted example, the coupler **150** can include a plurality of second retaining fingers **154** to engage or retain the lower connector **130** in the inserted or coupled axial position. In some embodiments, the plurality of second retaining fingers **154** are radially movable to allow the lower connector **130** to be inserted into the coupler **150**. The plurality of second retaining fingers **154** can move in and out of the cavity defined by the coupler **150**.

As illustrated, the plurality of second retaining fingers **154** can be hinged relative to the coupler **150** body. In some embodiments, the plurality of second retaining fingers **154** are integrally formed with the coupler **150**. Slots or windows **158** may be cut between the material of the coupler **150** to form the plurality of second retaining fingers **154**. The plurality of second retaining fingers **154** can be circumferentially spaced apart around the coupler **150**. The plurality of second retaining fingers **154** can be disposed in groups or sets around the coupler **150**. In some embodiments, the plurality of second retaining fingers **154** can be disposed at the end of the coupler **150** that receives the lower connector **130**.

In the depicted example, the plurality of second retaining fingers **154** can be biased radially inward to engage or retain the lower connector **130** within the coupler **150**. The plurality of second retaining fingers **154** can apply a radial spring force against the lower connector **130** to retain the lower connector **130** within the coupler **150**. As can be appreciated, the spring force of the plurality of second retaining fingers **154** can correspond to the retention force exerted upon the lower connector **130**. The plurality of second retaining fingers **154** can elastically deform to engage against the lower connector **130**.

In some embodiments, the plurality of second retaining fingers **154** can each include a protrusion or protruding feature **156** to engage with features of the lower connector **130**. The protruding feature **156** can extend radially inward to contact the lower connector **130**. For example, the plurality of second retaining fingers **154** and/or the protruding feature **156** can engage against a shoulder **136** of the lower connector **130**.

Optionally, the lower connector **130** can include a shoulder **136** that can be a radially raised portion that extends from the lower connector **130**. The shoulder **136** can be disposed between the inlet **132** and the outlet **134**. As illustrated, the shoulder **136** can be disposed toward the outlet **134**.

In the depicted example, the plurality of second retaining fingers **154** and/or the protruding feature **156** can engage against the shoulder **136** to prevent or restrict axial movement of the lower connector **130** relative to the coupler **150**. During insertion, after the shoulder **136** moves past the plurality of second retaining fingers **154** and/or the protruding feature **156**, the plurality of second retaining fingers **154** can move radially inward, axially bearing against the axial surface of the shoulder **136** and thereby retaining the lower connector **130**. In some embodiments, the protruding feature **156** of each of the plurality of second retaining fingers **154** can engage against the shoulder **136**.

Optionally, the protruding feature **156** can have a generally ramped surface bearing against the shoulder **136**, permitting radial expansion of the plurality of second retaining fingers **154** in response to axial (pullout) force exerted against the lower connector **130**. In some embodiments, the coupler **150** can be configured to allow the lower connector **130** to be removed in response to a selected or predetermined pullout force. The lower connector **130** may be removed from the coupler **150** with a pullout force of 1 pound, 2 pounds, 4 pounds, 5 pounds, 10 pounds, etc. As can be appreciated, the pullout force can be selected to prevent inadvertent release, while preventing damage to tubing or harm to patients.

Optionally, the coupler **150** can be configured to allow the upper connector **110** to remain retained when the lower connector **130** is removed. In other words, the coupler **150** can be configured to allow the lower connector **130** to be released with a lower pullout force compared to the upper connector **110**. After removal, the lower connector **130** can be reinserted into the coupler **150** to reconnect the lower connector **130** with the upper connector **110**.

The present disclosure is provided to enable any person skilled in the art to practice the various aspects described herein. The disclosure provides various examples of the subject technology, and the subject technology is not limited to these examples. Various modifications to these aspects

will be readily apparent to those skilled in the art, and the generic principles defined herein may be applied to other aspects.

A reference to an element in the singular is not intended to mean "one and only one" unless specifically so stated, but rather "one or more." Unless specifically stated otherwise, the term "some" refers to one or more. Pronouns in the masculine (e.g., his) include the feminine and neuter gender (e.g., her and its) and vice versa. Headings and subheadings, if any, are used for convenience only and do not limit the invention.

The word "exemplary" is used herein to mean "serving as an example or illustration." Any aspect or design described herein as "exemplary" is not necessarily to be construed as preferred or advantageous over other aspects or designs. In one aspect, various alternative configurations and operations described herein may be considered to be at least equivalent.

A phrase such as an "aspect" does not imply that such aspect is essential to the subject technology or that such aspect applies to all configurations of the subject technology. A disclosure relating to an aspect may apply to all configurations, or one or more configurations. An aspect may provide one or more examples. A phrase such as an aspect may refer to one or more aspects and vice versa. A phrase such as an "embodiment" does not imply that such embodiment is essential to the subject technology or that such embodiment applies to all configurations of the subject technology. A disclosure relating to an embodiment may apply to all embodiments, or one or more embodiments. An embodiment may provide one or more examples. A phrase such an embodiment may refer to one or more embodiments and vice versa. A phrase such as a "configuration" does not imply that such configuration is essential to the subject technology or that such configuration applies to all configurations of the subject technology. A disclosure relating to a configuration may apply to all configurations, or one or more configurations. A configuration may provide one or more examples. A phrase such a configuration may refer to one or more configurations and vice versa.

In one aspect, unless otherwise stated, all measurements, values, ratings, positions, magnitudes, sizes, and other specifications that are set forth in this specification, including in the claims that follow, are approximate, not exact. In one aspect, they are intended to have a reasonable range that is consistent with the functions to which they relate and with what is customary in the art to which they pertain.

In one aspect, the term "coupled" or the like may refer to being directly coupled. In another aspect, the term "coupled" or the like may refer to being indirectly coupled.

Terms such as "top," "bottom," "front," "rear" and the like if used in this disclosure should be understood as referring to an arbitrary frame of reference, rather than to the ordinary gravitational frame of reference. Thus, a top surface, a bottom surface, a front surface, and a rear surface may extend upwardly, downwardly, diagonally, or horizontally in a gravitational frame of reference.

Various items may be arranged differently (e.g., arranged in a different order, or partitioned in a different way) all without departing from the scope of the subject technology. All structural and functional equivalents to the elements of the various aspects described throughout this disclosure that are known or later come to be known to those of ordinary skill in the art are expressly incorporated herein by reference and are intended to be encompassed by the claims. Moreover, nothing disclosed herein is intended to be dedicated to the public regardless of whether such disclosure is explicitly recited in the claims. No claim element is to be construed under the provisions of 35 U.S.C. § 112, sixth paragraph, unless the element is expressly recited using the phrase "means for" or, in the case of a method claim, the element is recited using the phrase "step for." Furthermore, to the extent that the term "include," "have," or the like is used, such term is intended to be inclusive in a manner similar to the term "comprise" as "comprise" is interpreted when employed as a transitional word in a claim.

The Title, Background, Summary, Brief Description of the Drawings and Abstract of the disclosure are hereby incorporated into the disclosure and are provided as illustrative examples of the disclosure, not as restrictive descriptions. It is submitted with the understanding that they will not be used to limit the scope or meaning of the claims. In addition, in the Detailed Description, it can be seen that the description provides illustrative examples and the various features are grouped together in various embodiments for the purpose of streamlining the disclosure. This method of disclosure is not to be interpreted as reflecting an intention that the claimed subject matter requires more features than are expressly recited in each claim. Rather, as the following claims reflect, inventive subject matter lies in less than all features of a single disclosed configuration or operation. The following claims are hereby incorporated into the Detailed Description, with each claim standing on its own as a separately claimed subject matter.

The claims are not intended to be limited to the aspects described herein, but is to be accorded the full scope consistent with the language claims and to encompass all legal equivalents. Notwithstanding, none of the claims are intended to embrace subject matter that fails to satisfy the requirement of 35 U.S.C. § 101, 102, or 103, nor should they be interpreted in such a way.

What is claimed is:

1. A method, comprising:

inserting a portion of a first connector into a cavity of a coupler, wherein the first connector is coupled to a first portion of tubing;

biasing a plurality of first retaining fingers disposed at a first end of the coupler to engage against a collar of the first connector;

inserting a portion of a second connector into the cavity from a second end of the coupler, wherein a second outlet of the second connector is threadedly engaged with a second portion of tubing;

coupling an outlet of the first connector with an inlet of the second connector, permitting fluid communication between the first portion of tubing and the second portion of tubing;

biasing a plurality of second retaining fingers of the coupler to engage against a shoulder of the second connector with a retention force;

exerting a pullout force on the second connector in excess of the retention force; and

releasing the second connector from the coupler in response to the pullout force in excess of the retention force.

2. The method of claim **1**, further comprising:

radially aligning the portion of the first connector within the cavity of the coupler.

3. The method of claim **1**, further comprising:

radially aligning the first connector within the cavity of the coupler via a tapered portion within the cavity.

4. The method of claim **1**, wherein each of the plurality of second retaining fingers comprises a ramped protrusion extending radially inward.

5. The method of claim 1, further comprising:

permitting rotational motion of the first connector relative to the coupler.

6. The method of claim 1, wherein the coupler comprises a tubular shape.

7. A coupler assembly comprising:

a first connector, comprising:

a first connector body with a first inlet configured to be coupled to a first portion of tubing and a first outlet in fluid communication with the first inlet; and

a collar disposed between the first inlet and the first outlet;

a second connector, comprising:

a second connector body with a second inlet configured to be releasably coupled with the first outlet of the first connector, and a second outlet threadedly engaged with a second portion of tubing and in fluid communication with the second inlet; and

a shoulder disposed between the second inlet and the second outlet; and

a coupler, comprising:

a coupler body comprising a first end and a second end, and defining a cavity, wherein the first connector and the second connector are at least partially disposed within the cavity;

a plurality of first retaining fingers, wherein the plurality of first retaining fingers are biased to engage against the collar of the first connector to prevent axial motion of the first connector relative to the second connector; and

a plurality of second retaining fingers, wherein the plurality of second retaining fingers are biased to engage against the shoulder of the second connector with a retention force, and the plurality of second retaining fingers are configured to release the second connector in response to a pullout force exerted on the second connector exceeding the retention force.

8. The coupler assembly of claim 7, wherein at least one of the first connector and the second connector comprises a sealing valve configured to prevent fluid flow in an uncoupled state.

9. The coupler assembly of claim 7, wherein the collar defines a recess extending radially inward.

10. The coupler assembly of claim 7, wherein the first connector body comprises a frustroconical portion disposed between the first inlet and the collar, and the coupler body further comprising a tapered portion within the cavity, wherein the tapered portion is configured to engage with the frustroconical portion to radially align the first connector within the cavity.

11. The coupler assembly of claim 7, wherein each of the plurality of second retaining fingers comprises a ramped protrusion extending radially inward.

12. The coupler assembly of claim 7, wherein the coupler body comprises a tubular shape.

13. The coupler assembly of claim 7, wherein the plurality of first retaining fingers are circumferentially spaced apart.

14. The coupler assembly of claim 7, wherein the plurality of first retaining fingers are configured to permit rotational motion of the first connector relative to the coupler.

15. The coupler assembly of claim 7, wherein each of the plurality of first retaining fingers comprises a protrusion extending radially inward.

16. The coupler assembly of claim 7, wherein the plurality of first retaining fingers extend from a respective plurality of first windows defined in the coupler body.

17. The coupler assembly of claim 7, wherein the plurality of second retaining fingers defines a respective plurality of second windows therebetween.

* * * * *