April 30, 1935. L. DAVIDSON ET AL 1,999,399

THERMOSTATIC CONTROL DEVICE

Filed June 22, 1932

Fig. 1.

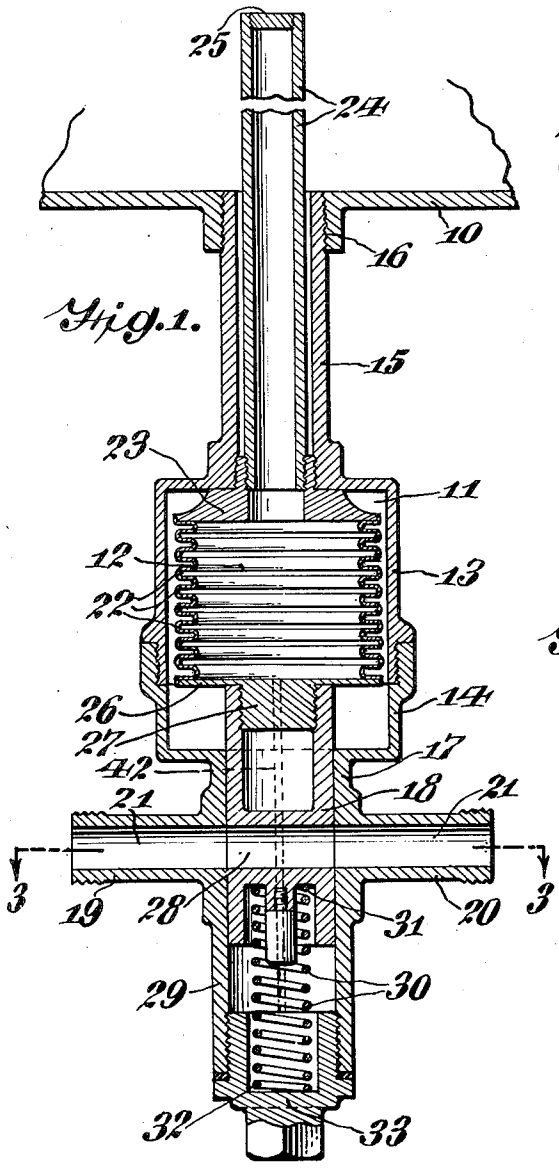

Fig. 2.

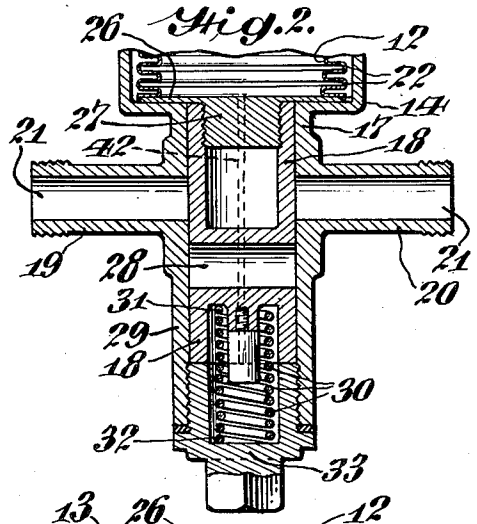

Fig. 4.

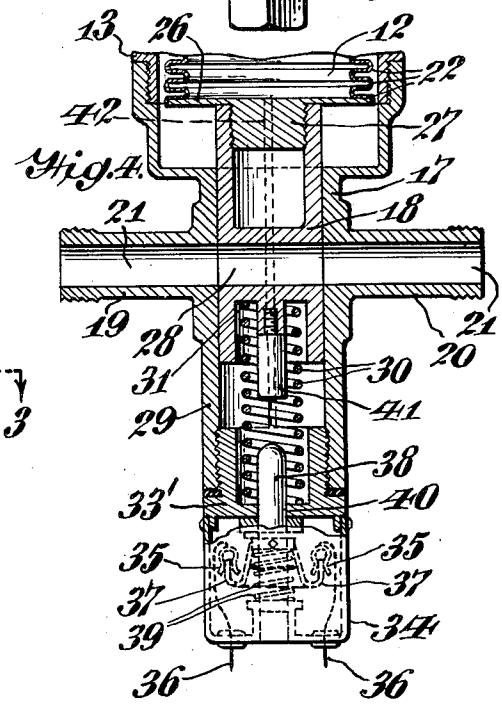

Fig. 3.

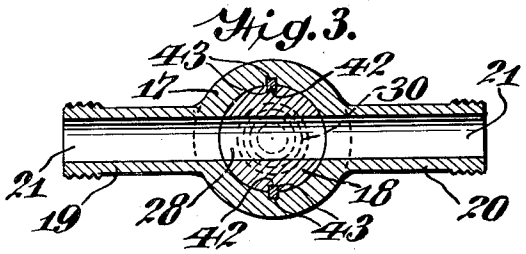

Inventors

Louis Davidson
and Harry L. Davidson,

John W. Myers

Attorney

Patented Apr. 30, 1935

1,999,399

UNITED STATES PATENT OFFICE

1,999,399

THERMOSTATIC CONTROL DEVICE

Louis Davidson and Harry L. Davidson,
Philadelphia, Pa.

Application June 22, 1932, Serial No. 618,710

4 Claims. (Cl. 236—99)

This invention relates to a thermostatic control device and involves an improvement in apparatus of this character in which a temperature sensitive device subject to the temperature of the heating medium within a boiler used for heating purposes is arranged to actuate a valve or other regulating device for controlling the flow of liquid or gaseous fuel to the combustion chamber of the boiler.

It is an object of the invention to provide a construction of this general character wherein the valve for regulating the supply of fuel to the boiler may be under the direct control of the temperature sensitive element. A further object of the improvement is the provision in apparatus of this general character of a construction in which the temperature sensitive element is in direct communication with the interior of the boiler. A further object of the invention is the provision, in such apparatus, of a construction whereby an electric switch may be easily and directly actuated by the temperature sensitive device. A still further object of the improvement is the provision of means whereby such a switch may be actuated upon a definite degree of movement of the temperature sensitive element. A still further object of the improvement is the provision of a fuel control valve so constructed as to be operated directly by the temperature sensitive element.

In order that the invention may be clearly understood, reference may be made to the accompanying drawing in which:

Fig. 1 is a longitudinal sectional view through the device, showing the valve in open position;

Fig. 2 is a longitudinal sectional view through a portion of the device, showing the valve in closed position;

Fig 3 is a transverse sectional view of the device taken on the line 3—3 of Fig. 1; and

Fig. 4 is a longitudinal sectional view, partly in elevation, showing the device adapted for the operation of an electric switch.

The improvement is designed primarily for use in connection with a boiler 10 of a heating system and comprises a two-part casing constituting a chamber 11 for the temperature sensitive device 12. This chamber is formed of two cup-shaped portions 13 and 14 threadedly connected at their open ends as shown in Fig. 1, and one of the cup-shaped portions 13 has projecting from the bottom portion thereof a tubular extension 15 threaded on its outer end for engagement within a suitable opening 16 in the outer wall of the boiler casing. The other cup-shaped portion 14 of the chamber is provided with a hollow extension forming a casing 17 for a slide valve 18 operating therein. Oppositely arranged nipples 19 and 20 on this valve casing constitute a passageway 21 therethrough for a liquid or gaseous fuel when the device is connected in the fuel supply line leading to the combustion chamber of the boiler 10.

The temperature sensitive device 12 within the chamber 11 is of the usual bellows type. One end of the corrugated side wall 22 of this device is secured to an immovable end wall 23 threaded in the inner end of the tubular extension 15 and having a central opening therethrough by means of which the interior of the temperature sensitive device is in communication with the interior of a tube 24 threaded in the opening in the end wall 23 and extending through the tubular extension 15 into the interior of the boiler casing. The outer end 25 of the tube 24 is closed, and the tube being in communication with the interior of the bellows device 12 the fluid employed in the temperature sensitive device is directly subject to the heating medium within the boiler 10.

The movable end of the temperature sensitive device 12 is closed by means of a plate 26 having a boss 27 on its outer face for threaded engagement within an opening in one end of the slide valve 18 mounted for longitudinal movement within the valve casing 17. The slide valve 18 is provided with a transverse opening 28, preferably having a cross-sectional area equal to the cross-sectional area of the passageway 21 through the valve casing. As will be clearly understood, endwise or longitudinal movement of the slide valve 18 serves to bring the transverse passageway 28 into and out of alinement with the passageway 21 through the valve casing, thereby permitting liquid or gaseous fuel to pass freely through the valve casing when the valve is in open position as shown in Figs. 1, 3 and 4, and operating to decrease the flow of fuel through the valve as the slide moves from open toward closed position, the flow being entirely cut off when the valve is completely closed as shown in Fig. 2.

The hollow extension 29 on the valve casing 17 serves as a guideway for the slide valve 18 when the valve is in closed or partially closed position. A coiled spring 30 has the end 31 thereof in engagement with the slide valve and its opposite end 32 supported within the interior of a hollow plug 33 in threaded engagement with the open end of the hollow extension 29 on the valve casing. The coiled spring 30 tends to retain the slide valve in a position wherein the transverse opening therethrough is in alinement with the passageway through the valve casing. The tension on the coiled spring 30 may be regulated by adjusting the position of the threaded plug 33 in the end of the hollow extension, a suitable number of washers being inserted between the flange on the plug and the lower end of the hollow extension 29 if desired.

In Fig. 4 of the drawing, there is disclosed a

construction whereby the temperature sensitive device 12 may be utilized for opening a switch in the circuit of an electric motor which may be employed for driving an oil pump or other similar apparatus used in connection with an oil burning heating system, or for other purposes. In this case the hollow plug 33' secured in the open end of the hollow extension 29 on the valve casing may have an electric switch 34 mounted thereon. This switch comprises stationary contacts 35 to which the electric terminals 36 may be connected, and movable contacts 37 carried by a plunger 38 mounted in such a manner that a coiled spring 39 surrounding the same tends to retain it in its innermost position and to retain the switch in the closed position. One end of the plunger 38 extends through an opening 40 in the closed end of the plug 33' and is of such a length as to contact with a switch operating pin 41, threaded or otherwise secured to the slide valve 18, when the valve is in closed position. In this particular construction, one end of the coiled spring 30 surrounds the extended end of the plunger 38 and the opposite end thereof surrounds the switch operating pin 41.

For the purpose of preventing rotational movement of the slide valve 18 in the valve casing 17, splines 42 may be arranged in suitable kerfs 43 in opposing faces of the walls of the valve and the casing.

As will be understood from the above description, taken with the accompanying drawing, the device is so connected with a heating system that the inner end of the tube 24 connected to the temperature sensitive element 12 extends into the heating medium within the casing of the boiler 10 so that the temperature sensitive element is directly subject to the changes in temperature of the heating medium within the boiler. The expansible element employed in the temperature sensitive device 12 may be any well-known substance, and it will be understood that the expansion thereof, due to an increase in the temperature of the heating medium within the boiler, will operate to move the end wall 26 of the temperature sensitive element in a direction to move the transverse passageway through the slide valve out of direct alinement with the passageway through the valve casing, thereby decreasing the flow of liquid or gaseous fuel through the supply line in which the device is connected. As shown herein the device is so constructed that the supply of fuel may be entirely cut off from the boiler when the temperature of the heating medium is raised to a sufficient extent. When the temperature of the heating medium within the boiler is lowered by giving up heat to the radiators or other elements of the heating system, the expansible medium in the temperature sensitive element contracts, whereupon the movable end wall 26 operates to move the slide valve in a direction to bring the passageway through the slide valve into alinement with the passageway through the valve casing, thus permitting an increased flow of fuel through the valve.

Although the electric switch is shown combined with the slide valve in such a manner that the electrical circuit is broken when the slide valve is in closed position, and the switch is closed when the slide valve is in its open position, it will be understood that it is not essential that the slide valve perform its functions as a valve in order that the switch may be operated by means of the temperature sensitive device. In other words, the temperature sensitive device as herein disclosed may be employed solely for the purpose of operating the electrical switch, in which case the slide valve need not be employed to control the flow of fuel through the passageway of the valve casing.

While there are disclosed herein certain embodiments of the improvement, it will be understood that various changes may be made therein, both in form and construction, without departing from the spirit of the invention as set out in the appended claims.

Having thus described our invention, what we claim and desire to secure by United States Letters Patent is:

1. In a fuel control valve, a valve casing having a passageway therethrough and an opening extending therethrough transversely of said passageway, a slide valve operable in said opening and having a passageway therein movable into different positions of alinement with respect to the passageway through said casing, a guideway on said casing for said slide valve, an electric switch on said guideway, means on said slide valve for opening said switch when said valve is in closed position, means for closing said switch when said valve is in open position, and means for moving said slide valve into open and closed positions.

2. In a fuel control valve, a valve casing having a passageway therethrough and an opening extending therethrough transversely of said passageway, a slide valve operable in said opening and having a passageway therein movable into different positions of alinement with respect to the passageway through said casing, a guideway on said casing for said slide valve, an electric switch on said guideway, means on said slide valve for opening said switch when said valve is in closed position, means for closing said switch when said valve is in open position, and a temperature sensitive device for actuating said slide valve.

3. In a fuel control valve, a valve casing having a passageway therethrough and an opening extending therethrough transversely of said passageway, a slide valve operable in said opening and having a passageway therein movable into different positions of alinement with respect to the passageway through said casing, a guideway on one side of said casing for said slide valve, an electric switch on said guideway, means on said slide valve for opening said switch when said valve is in closed position, means for closing said switch when said valve is in open position, and means for adjusting said switch to and from said slide valve.

4. In a thermostatic control device, a casing having a tubular extension on one end thereof for connecting the same to a boiler and a hollow extension on the opposite end, a temperature sensitive device within said casing and having means extending through said tubular extension and communicating with the interior of said boiler, an electric switch mounted on said hollow extension, means on said temperature sensitive device and extending through said hollow extension for opening said switch, and means for closing said switch.

LOUIS DAVIDSON.
HARRY L. DAVIDSON.