US 20030035733A1

(19) **United States**

(12) **Patent Application Publication** (10) **Pub. No.: US 2003/0035733 A1**

Hirota (43) **Pub. Date: Feb. 20, 2003**

(54) **COMPRESSION CAPACITY CONTROL DEVICE FOR REFRIGERATION CYCLE**

(76) Inventor: **Hisatoshi Hirota**, Tokyo (JP)

Correspondence Address:
James E. Nilles
Nilles & Nilles, S.C.
U.S. Bank Center, Suite 2000
777 East Wisconsin Avenue
Milwaukee, WI 53202 (US)

(21) Appl. No.: **10/217,556**

(22) Filed: **Aug. 13, 2002**

Related U.S. Application Data

(63) Continuation of application No. PCT/JP02/00364, filed on Jan. 18, 2002.

(30) **Foreign Application Priority Data**

Jan. 19, 2001 (JP) 2001-011513
Apr. 23, 2001 (JP) 2001-123750

Publication Classification

(51) **Int. Cl.**[7] **F04B 1/26**; F25B 1/00; F25B 49/00
(52) **U.S. Cl.** **417/222.2**; 62/228.3; 62/228.5

(57) **ABSTRACT**

In a compression capacity control device for a refrigeration cycle including a variable displacement compressor that compresses refrigerant sucked from a suction chamber communicating with a suction line, and discharges the refrigerant into a discharge chamber communicating with a discharge line, while varying the delivery quantity of the refrigerant by changing pressure in a pressure-regulating chamber which has the pressure therein controlled by an electromagnetic control valve, the electromagnetic control valve arranged between the discharge chamber and the pressure-regulating chamber is held in an open state to place the variable displacement compressor in a state with the minimum delivery quantity within a variable range, when the electromagnetic control valve is in a deenergized state. This makes it possible to dispense with a clutch for inhibiting operation of the compressor, thereby largely reducing the device cost.

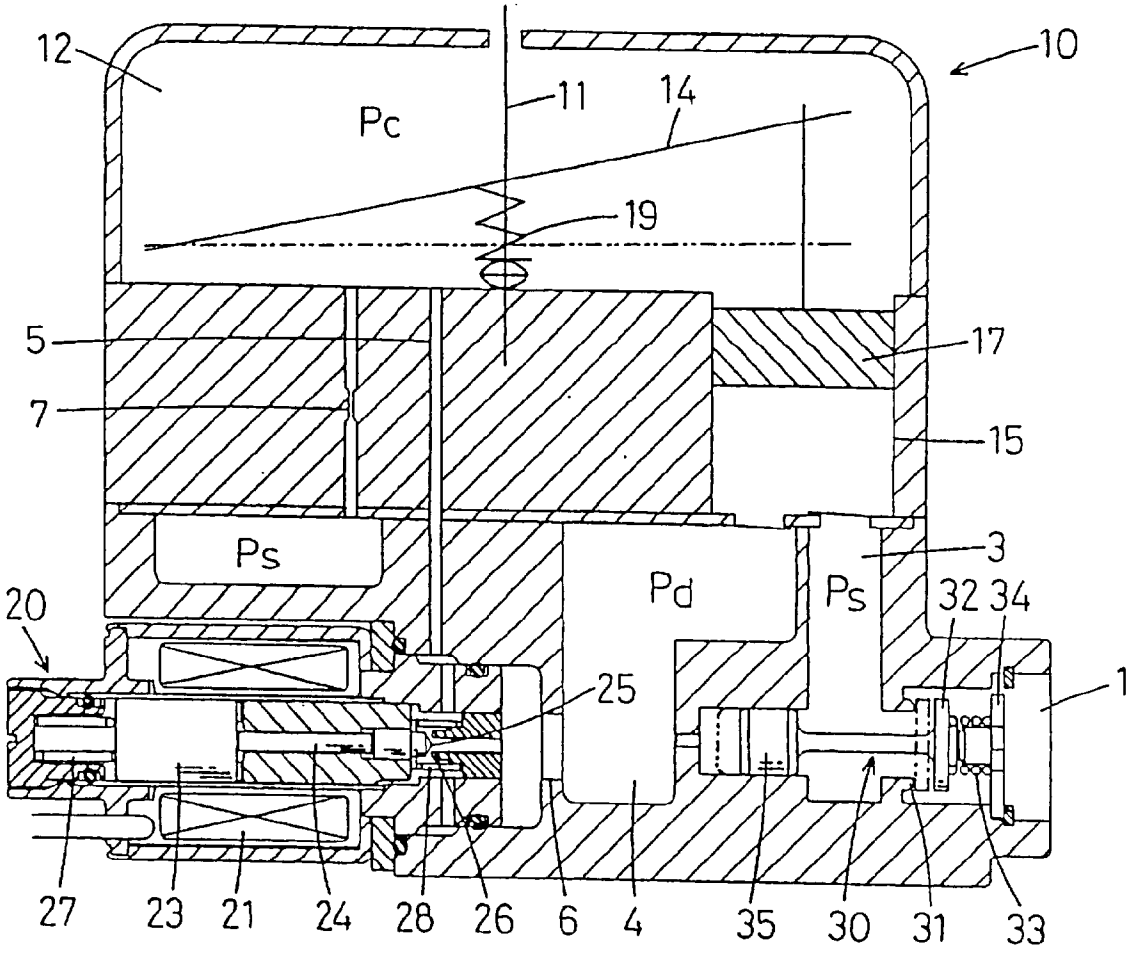

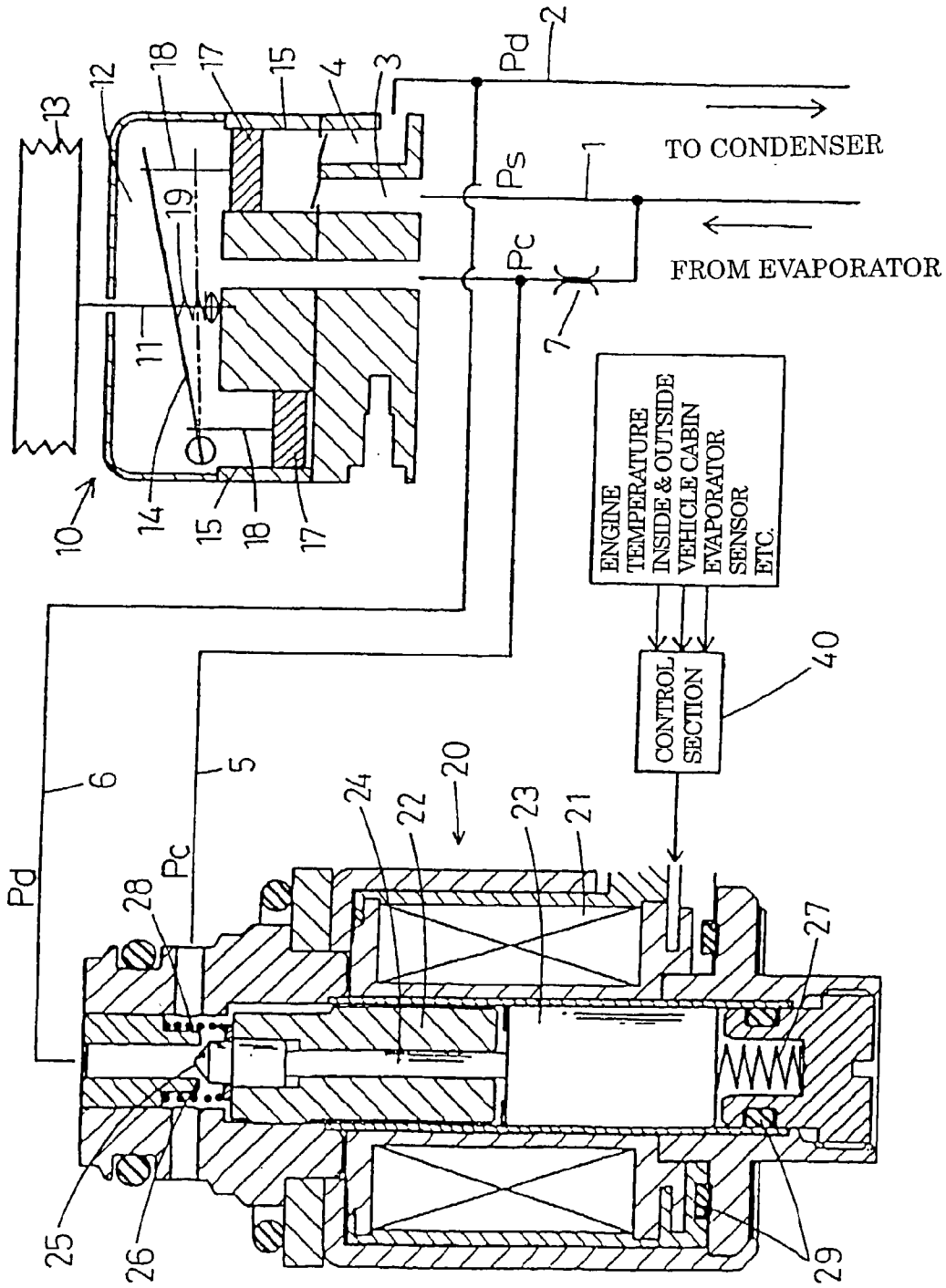
Pd
2
TO CONDENSER
Ps
1
FROM EVAPORATOR
Pc
7
ENGINE TEMPERATURE
INSIDE & OUTSIDE VEHICLE CABIN EVAPORATOR SENSOR
ETC.
CONTROL SECTION
40
6
5
Pd
Pc
28
24
22
20
23
21
27
25
26
29
10
14
15
18
17
11
19
12
13
4
3

FIG. 1

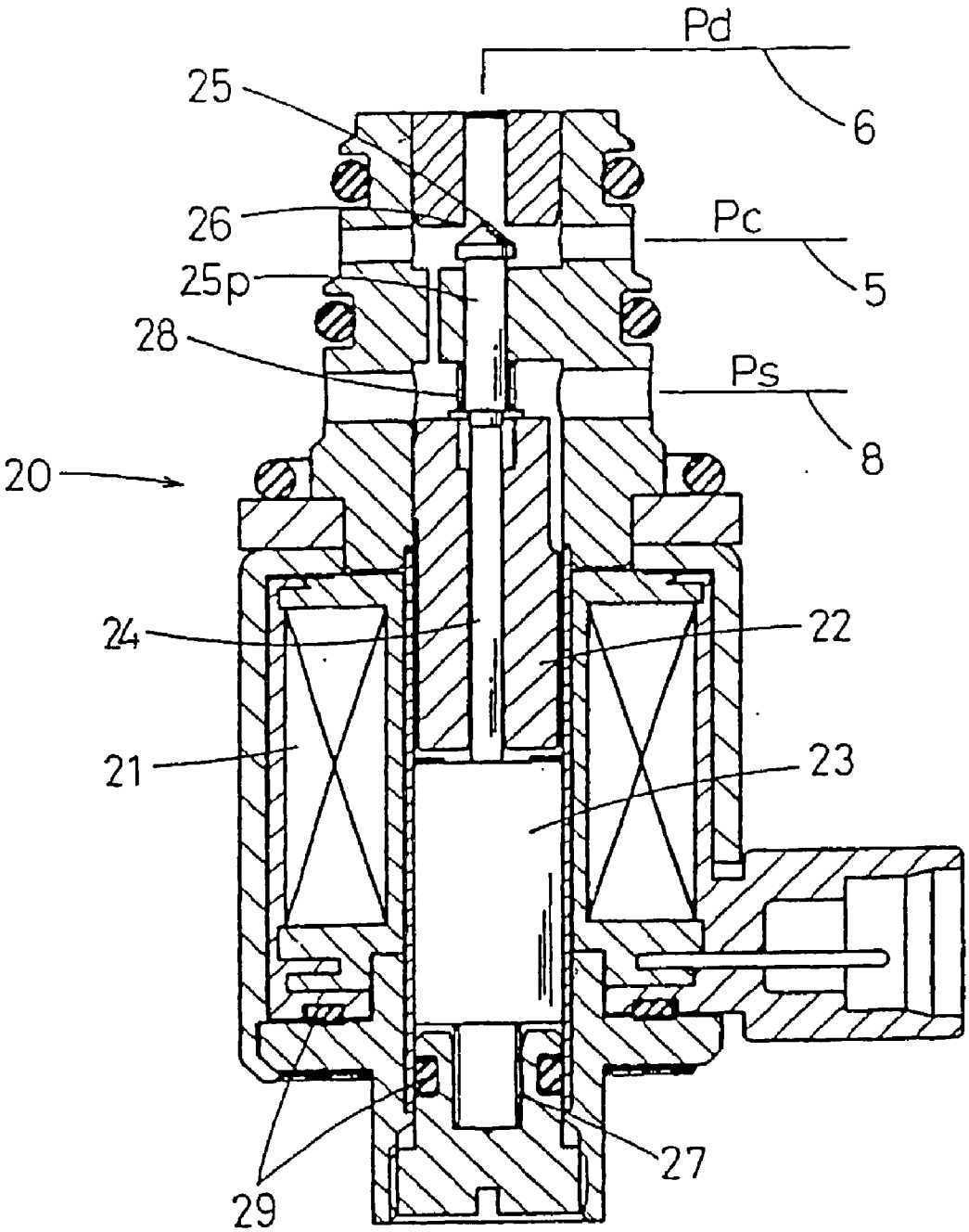

FIG. 2

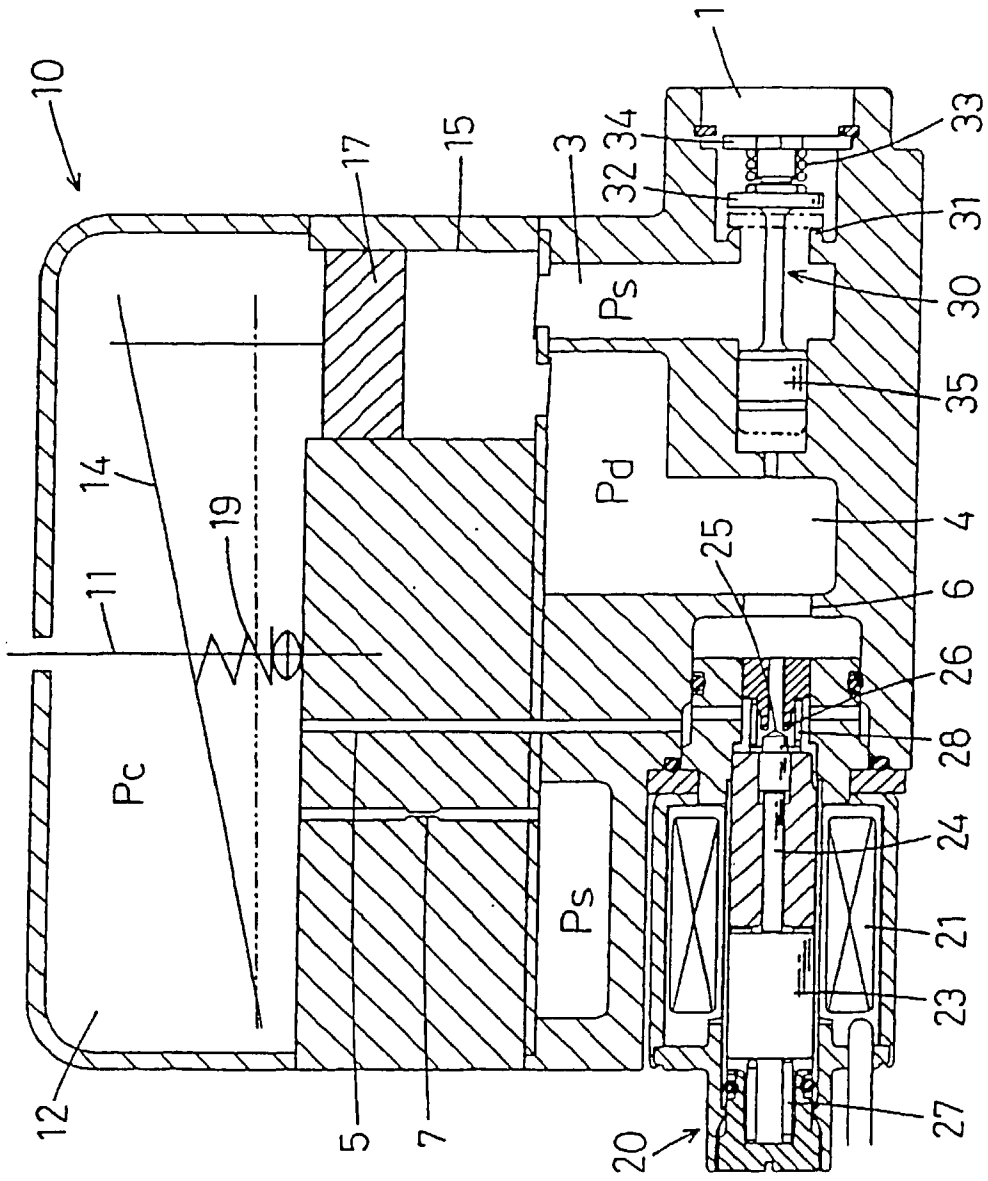
10
1
17
15
3
34
32
33
31
30
35
Ps
Pd
4
25
6
26
28
24
21
23
27
20
Ps
Pc
14
19
11
12
5
7

FIG. 3

COMPRESSION CAPACITY CONTROL DEVICE FOR REFRIGERATION CYCLE

[0001] This application is a continuing application, filed under 35 U.S.C. §111(*a*), of International Application PCT/JP02/00364, filed on Jan. 18, 2002.

BACKGROUND OF THE INVENTION

[0002] (1) Field of the Invention

[0003] This invention relates to a compression capacity control device for a refrigeration cycle used in an automotive air conditioner or the like.

[0004] (2) Description of the Related Art

[0005] A compressor used in a refrigeration cycle for an automotive air conditioner is directly connected to an engine by a belt, and hence is not capable of controlling the rotational speed thereof. For this reason, a variable displacement compressor capable of changing the compression capacity (delivery quantity) is employed so as to obtain an adequate refrigerating capability without being constrained by the rotational speed of the engine.

[0006] Such a variable displacement compressor is generally configured such that it compresses a refrigerant sucked from a suction chamber communicating with a suction line, and discharges the refrigerant into a discharge chamber communicating with a discharge line, while varying a delivery quantity of the refrigerant by changing pressure in a pressure-regulating chamber which has the pressure therein controlled by an electromagnetic control valve or the like.

[0007] In the conventional device, a pulley receiving the rotation of the belt directly connected to the engine is provided with an electromagnetic clutch or the like so as to inhibit the compressor from being driven when it is in an operating condition in which compression of the refrigerant is not required. Thus, the trouble of increasing the device cost is taken only for inhibiting operation of the compressor.

SUMMARY OF THE INVENTION

[0008] It is an object of the invention to provide a compression capacity control device for a refrigeration cycle, which is capable of dispensing with a clutch for inhibiting operation of a compressor, thereby largely reducing the device cost.

[0009] To attain the above object, there is provided a compression capacity control device for a refrigeration cycle including a variable displacement compressor that compresses refrigerant sucked from a suction chamber communicating with a suction line, and discharges the refrigerant into a discharge chamber communicating with a discharge line, while varying a delivery quantity of the refrigerant by changing pressure in a pressure-regulating chamber, the pressure in the pressure-regulating chamber being controlled by an electromagnetic control valve, characterized in that the compression capacity control valve is configured to place the variable displacement compressor in a state with a minimum delivery quantity within a variable range, when the electromagnetic control valve is in a deenergized state.

[0010] Further, the compression capacity control device may be configured such that the electromagnetic control valve opens and closes communication between pressure in the discharge chamber and the pressure-regulating chamber and the discharge chamber such that differential pressure between at least one of pressure in the pressure-regulating chamber and pressure in the suction chamber is held at a predetermined differential pressure, and that an electromagnetic force of the electromagnetic control valve is changed to thereby change the differential pressure to change the pressure in the pressure-regulating chamber, whereby the delivery quantity of the refrigerant is controlled.

[0011] Further, the compression capacity control device may be configured such that urging means is arranged for holding the electromagnetic control valve in an open state when the electromagnetic control valve is in the deenergized state, whereby by controlling the electromagnetic control valve in the open state, the variable displacement compressor is placed in the state with the minimum delivery quantity within the variable range.

[0012] Still further, the compression capacity control device may be configured such that a suction line opening/closing valve is arranged for closing communication between the suction line and the suction chamber when the differential pressure between the pressure in the discharge chamber and the pressure in the suction chamber becomes equal to or smaller than a predetermined value.

[0013] The above and other objects, features and advantages of the present invention will become apparent from the following description when taken in conjunction with the accompanying drawings which illustrate preferred embodiments-of the present invention by way of example.

BRIEF DESCRIPTION OF THE DRAWINGS

[0014] **FIG. 1** is a longitudinal sectional view showing the whole arrangement of a compression capacity control device for a refrigeration cycle, according to a first embodiment of the invention;

[0015] **FIG. 2** is a longitudinal sectional view showing a capacity control electromagnetic valve according to a second embodiment of the invention; and

[0016] **FIG. 3** is a longitudinal sectional view showing the whole arrangement of a compression capacity control device for a refrigeration cycle, according to a third embodiment of the invention.

DESCRIPTION OF THE PREFERRED EMBODIMENTS

[0017] The present invention will now be described hereafter with reference to the accompanying drawings.

[0018] In **FIG. 1**, reference numeral **10** denotes a swash plate variable displacement compressor which is used in a refrigeration cycle for air conditioning of an automotive vehicle. Although R134A or the like is used as refrigerant, the invention may be applied to a refrigeration cycle using carbon dioxide as refrigerant.

[0019] Reference numeral **11** denotes a rotational shaft arranged in a hermetically sealed crankcase **12** (pressure-regulating chamber). The rotational shaft **11** is connected to an axial portion of a pulley **13** which is driven for rotation by a drive belt, not shown, directly connected to an engine. As the rotational shaft **11** rotates, a wobble plate **14** performs

wobbling motion which is arranged in the crankcase **12** in a manner inclined with respect to the rotational shaft **11**.

[**0020**] The crankcase **12** has cylinders **15** arranged at a peripheral portion thereof. Each cylinder **15** has a piston **17** arranged therein such that the piston **17** can perform reciprocating motion. The piston **17** and the wobble plate **14** are connected to each other by a rod **18**.

[**0021**] As a result, when the wobble plate **14** performs wobbling motion, each piston **17** is caused to reciprocate within the cylinder **15**, whereby a low-pressure (suction pressure Ps) refrigerant is sucked from a suction chamber **3** into the cylinder **15** to be compressed therein. The refrigerant compressed to a high-pressure (discharge pressure Pd) is delivered into a discharge chamber **4**.

[**0022**] The suction chamber **3** has a refrigerant supplied therein from an evaporator, not shown, which is arranged at a location upstream thereof, via a suction line **1**. The discharge chamber **4** delivers the high-pressure refrigerant to a condenser, not shown, which is arranged at a location downstream thereof, via a discharge line **2**.

[**0023**] The degree of inclination of the wobble plate **14** is changed according to pressure (crankcase pressure Pc) in the crankcase **12**, and the quantity (delivery quantity, i.e. compression capacity) of the refrigerant delivered from the cylinder **15** is changed according to the degree of inclination of the wobble plate **14**.

[**0024**] The delivery quantity is increased when the wobble plate **14** is inclined as indicated by a solid line, whereas when the wobble plate **14** is not inclined as indicated by a two-dot chain line, the delivery quantity is small. The delivery quantity is reduced to zero if the wobble plate **14** becomes perpendicular to the rotational shaft **11**.

[**0025**] However, as the wobble plate **14** is progressively brought into a state in which the degree of inclination thereof is being reduced to zero (state in which the wobble plate **14** is approaching the two-dot chain line), a minimum-securing spring **19** mounted in the manner surrounding the rotational shaft **11** is progressively compressed by the wobble plate **14**.

[**0026**] As a result, a reaction force exerted from the minimum-securing spring **19** to the wobble plate **14** is progressively increased whereby the wobble plate **14** is inhibited from becoming perpendicular to the rotational shaft **11** to prevent the delivery quantity from being smaller than e.g. approximately 3 to 5% of the maximum delivery quantity.

[**0027**] The above operating condition in which the delivery quantity is controlled to be minimum is referred to as "the minimum operation". It should be noted that the minimum-securing spring **19** is known in the art and formed e.g. by a combination of a wavy spring and a coil spring.

[**0028**] Reference numeral **20** denotes a capacity control electromagnetic valve which is controlled by an electromagnetic solenoid (electromagnetic control valve) for carrying out compression capacity control by automatically controlling the crankcase pressure (Pc). Reference numerals **21** and **22** denote an electromagnetic coil and a fixed core, respectively.

[**0029**] A movable core **23** and a valve element **25** are connected to each other by an axially movable rod **24** that is arranged in a state extending through the fixed core **22**, and are urged from opposite ends thereof by respective compression coil springs **27**, **28**.

[**0030**] Reference numeral **29** denotes O rings as sealing members. It should be noted that the urging forces of the two compression coil springs **27**, **28** are set such that the urging force of the spring **28** for opening the valve is larger than that of the spring **27** for closing the valve.

[**0031**] A valve seat **26** is formed between a crankcase communication passage **5** for communication with the crankcase **12**, and a discharge chamber communication passage **6** for communication with the discharge chamber **4**. The valve element **25** is arranged in a manner opposed to the valve seat **26** from the side of the crankcase communication passage **5**. The crankcase communication passage **5** and the suction line **1** are communicated with each other via a thin leak passage **7**.

[**0032**] The above construction permits the differential pressure (Pd−Pc) between the discharge pressure (Pd) and the crankcase pressure (Pc) to act on the valve element **25** in the valve-opening direction, and the electromagnetic force (including the urging forces of the compression coil springs **27**, **28**) of the capacity control electromagnetic valve **20** to act on the valve element **25** in the valve-closing direction.

[**0033**] Therefore, when the current value of current for energizing the electromagnetic coil **21** is constant and hence the electromagnetic force of the capacity control electromagnetic valve **20** is constant, the valve element **25** is opened and closed in accordance with changes in the differential pressure (Pd−Pc) between the discharge pressure (Pd) and the crankcase pressure (Pc) such that the differential pressure (Pd−Pc) is held constant, whereby the crankcase pressure (Pc) is controlled to have a value corresponding to a value of the discharge pressure (Pd), for holding constant the compression capacity (delivery quantity).

[**0034**] Then, when the current value of the current for energizing the electromagnetic coil **21** is changed to change the electromagnetic force of the capacity control electromagnetic valve **20**, the differential pressure (Pd Pc) to be held constant is varied in a manner corresponding to the change, whereby the compression capacity (delivery quantity) is held constant at a level different from that of the above compression capacity (delivery quantity).

[**0035**] More specifically, when the electromagnetic force of the capacity control electromagnetic valve **20** is reduced, the differential pressure (Pd−Pc) to be held constant is reduced, so that the crankcase pressure (Pc) is increased to become closer to the discharge pressure (Pd), and the wobble plate **14** becomes closer to a position where it is perpendicular to the rotational shaft **11**, resulting in a reduced delivery quantity of refrigerant.

[**0036**] Inversely, when the electromagnetic force of the capacity control electromagnetic valve **20** is increased, the differential pressure (Pd−Pc) to be held constant is increased, so that the crankcase pressure (Pc) is decreased to be increasingly different from the discharge pressure (Pd), whereby the degree of inclination of the wobble plate **14** toward the rotational shaft **11** is increased, which results in an increased delivery quantity of refrigerant.

[**0037**] It should be noted that to control the current value of the current for energizing the electromagnetic coil **21**,

signals from a plurality of sensors for detecting various conditions, such as conditions of an engine, temperatures inside and outside the vehicle cabin, and an evaporator sensor, are input to a control section **40** incorporating a CPU, etc., and a control signal based on results of computations thereof is delivered from the control section **40** to the electromagnetic coil **21**. The drive circuit of the electromagnetic coil **21** is omitted from illustration.

[**0038**] If energization of the electromagnetic coil **21** is stopped, the valve element **25** is moved away from the valve seat **26** to open the capacity control electromagnetic valve **20**, due to the difference between the urging forces of the two compression coil springs **27**, **28** urging the valve element **25** of the capacity control electromagnetic valve **20**.

[**0039**] Then, the differential pressure between the discharge pressure (Pd) and the crankcase pressure (Pc) is reduced to zero (i.e. Pd−Pc 0), so that the wobble plate **14** is about to be perpendicular to the rotational shaft **11**. However, before this position, the inclination of the wobble plate **14** is balanced with the reaction force from the minimum-securing spring **19**, whereby the compressor **10** is placed in a state maintaining the minimum operation.

[**0040**] As described above, if energization of the electromagnetic coil **21** of the capacity control electromagnetic valve **20** is stopped, the compressor **10** starts the minimum operation, so that even if it is not necessary to operate the compressor **10**, the rotational shaft **11** can continue to be driven for rotation.

[**0041**] **FIG. 2** shows a capacity control electromagnetic valve **20** according to a second embodiment of the invention. Since a compressor **10** is similar to the compressor of the first embodiment, it is omitted from illustration. Further, the leak passage is arranged as appropriate.

[**0042**] In this embodiment, the valve element **25** has a piston rod **25***p* integrally formed therewith on a rear side thereof. The piston rod **25***p* has a pressure-receiving area equal to that of the valve seat **26**. The piston rod **25***p* has a rear surface facing a space which is communicated with a suction chamber communication passage **8**, and a side surface facing a space which is communicated with the crankcase communication passage **5**. Further, a space on a rear side of the valve seat **26** as viewed from a valve element side is communicated with the discharge chamber communication passage **6**.

[**0043**] As a result, the crankcase pressure (Pc) applied to the piston rod **25***p*, the valve element **25**, and so forth is canceled out, and the valve element **25** is opened and closed by the differential pressure (Pd−Ps) between the discharge pressure (Pd) and the suction pressure (Ps), whereby communication between the crankcase **12** and the discharge chamber **4** is opened and closed for execution of compression capacity control.

[**0044**] If energization of the electromagnetic coil **21** is stopped, the valve element **25** is moved away from the valve seat **26** to open the capacity control electromagnetic valve **20**, by the difference between the urging forces of the two compression coil springs **27**, **28**, which maintains the minimum operation of the compressor **10**.

[**0045**] As described above, the present invention can be applied to a device in which communication between the crankcase **12** and the discharge chamber **4** is opened and closed such that differential pressure between the pressure (Pd) in the discharge chamber **4** and at least one of the pressure (Pc) in the crankcase **12** and the pressure (Ps) in the suction line **1** is held at a predetermined differential pressure, and the electromagnetic force of the capacity control electromagnetic valve **20** is changed to thereby change the above differential pressure to change the pressure (Pc) in the crankcase **12** whereby the delivery quantity is varied. Further, it is also possible to apply the present invention to a device which is controlled by a method other than the above.

[**0046**] **FIG. 3** shows a third embodiment of the invention. In this embodiment, the device having the same construction as the device according to the first embodiment further includes a suction line opening/closing valve **30** for closing communication between the suction line **1** and the suction chamber **3** when the differential pressure between the pressure in the discharge chamber **4** and the pressure in the suction chamber **3** becomes equal to or lower than a predetermined value.

[**0047**] In this embodiment, a valve element **32** is arranged in a manner opposed to a valve seat **31** which is formed between the suction line **1** and the suction chamber **3**, from the suction line side. The valve element **32** is urged by a compression coil spring **33** in the valve-closing direction. Reference numeral **34** denotes a spring receiver having a large cut-away portion formed such that it does not obstruct passing of the refrigerant.

[**0048**] A pressure-receiving piston **35**, which receives the pressure (Pd) from the discharge chamber **4** and the pressure (Ps) in the suction chamber **3** from a front side and a rear side thereof, respectively, is connected to the valve element **32**. When then differential pressure (Pd−Ps) between the pressure (Pd) in the discharge chamber **4** and the pressure (Ps) in the suction chamber **3** is larger than a predetermined value, the valve element **32** is away from the valve seat **31** to open the suction line opening/closing valve **30**, whereas when the compressor **10** starts the minimum operation and the differential pressure (Pd−Ps) becomes smaller than the predetermined value, the valve element **32** is pressed against the valve seat **31** to close the suction line opening/closing valve **30**.

[**0049**] The above construction makes it possible to prevent fins of the evaporator from collecting ice during the minimum operation under a low operating load e.g. in winter, since a low-pressure refrigerant in the suction line **1** is not sucked into the compressor **10**.

[**0050**] According to the present invention, the variable displacement compressor maintains the minimum delivery quantity within a variable range when the electromagnetic control valve is not energized. This makes it possible to dispense with a clutch for inhibiting operation of the compressor, thereby largely reducing the device cost.

[**0051**] The foregoing is considered as illustrative only of the principles of the present invention. Further, since numerous modifications and changes will readily occur to those skilled in the art, it is not desired to limit the invention to the exact construction and applications shown and described, and accordingly, all suitable modifications and equivalents may be regarded as falling within the scope of the invention in the appended claims and their equivalents.

What is claimed is:

1. A compression capacity control device for a refrigeration cycle including a variable displacement compressor that compresses refrigerant sucked from a suction chamber communicating with a suction line, and discharges the refrigerant into a discharge chamber communicating with a discharge line, while varying a delivery quantity of the refrigerant by changing pressure in a pressure-regulating chamber, the pressure in the pressure-regulating chamber being controlled by an electromagnetic control valve,

wherein the compression capacity control device is configured to place the variable displacement compressor in a state with a minimum delivery quantity within a variable range, when the electromagnetic control valve is in a deenergized state.

2. The compression capacity control device according to claim 1, wherein the electromagnetic control valve opens and closes communication between the pressure-regulating chamber and the discharge chamber such that differential pressure between pressure in the discharge chamber and at least one of pressure in the pressure-regulating chamber and pressure in the suction chamber is held at a predetermined differential pressure, and wherein an electromagnetic force of the electromagnetic control valve is changed to thereby change the differential pressure to change the pressure in the pressure-regulating chamber, whereby the delivery quantity of the refrigerant is controlled.

3. The compression capacity control device according to claim 1, wherein urging means is arranged for holding the electromagnetic control valve in an open state when the electromagnetic control valve is in the deenergized state, whereby by holding the electromagnetic control valve in the open state, the variable displacement compressor is placed in the state with the minimum delivery quantity within the variable range.

4. The compression capacity control device according to claim 1, wherein a suction line opening/closing valve is arranged for closing communication between the suction line and the suction chamber when the differential pressure between the pressure in the discharge chamber and the pressure in the suction chamber becomes equal to or smaller than a predetermined value.

* * * * *