March 21, 1961 A. L. PANSINI 2,975,791

AUTOMATIC SWIMMING POOL CLEANER

Filed July 2, 1959 3 Sheets-Sheet 1

FIG_1

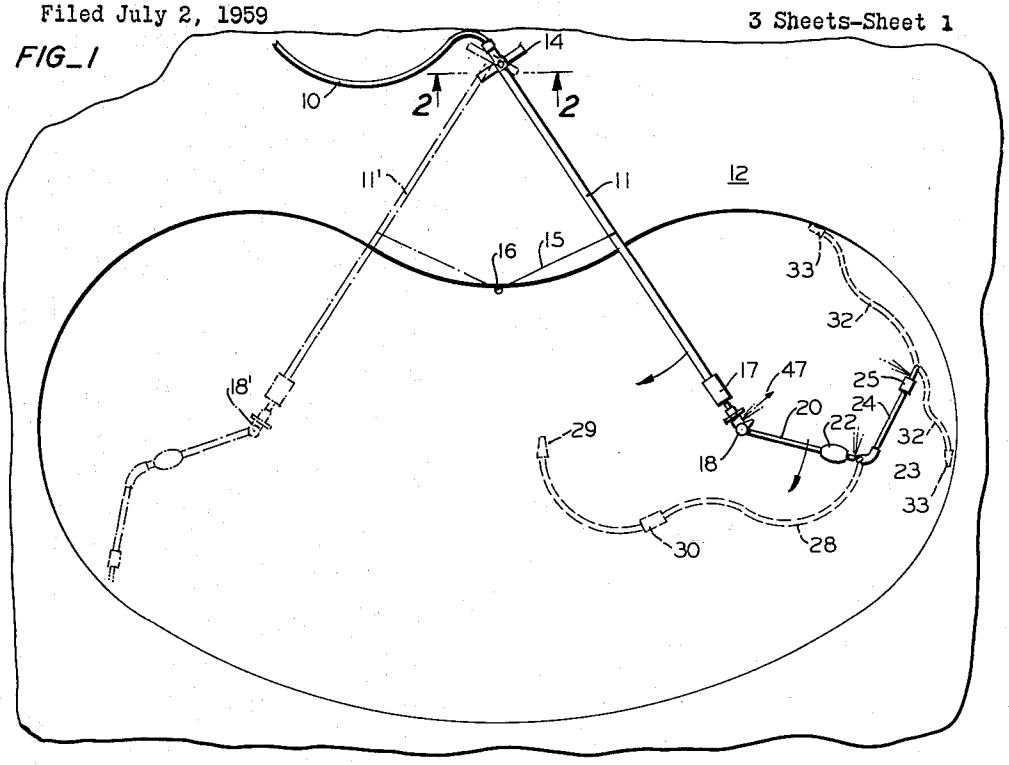

FIG_2

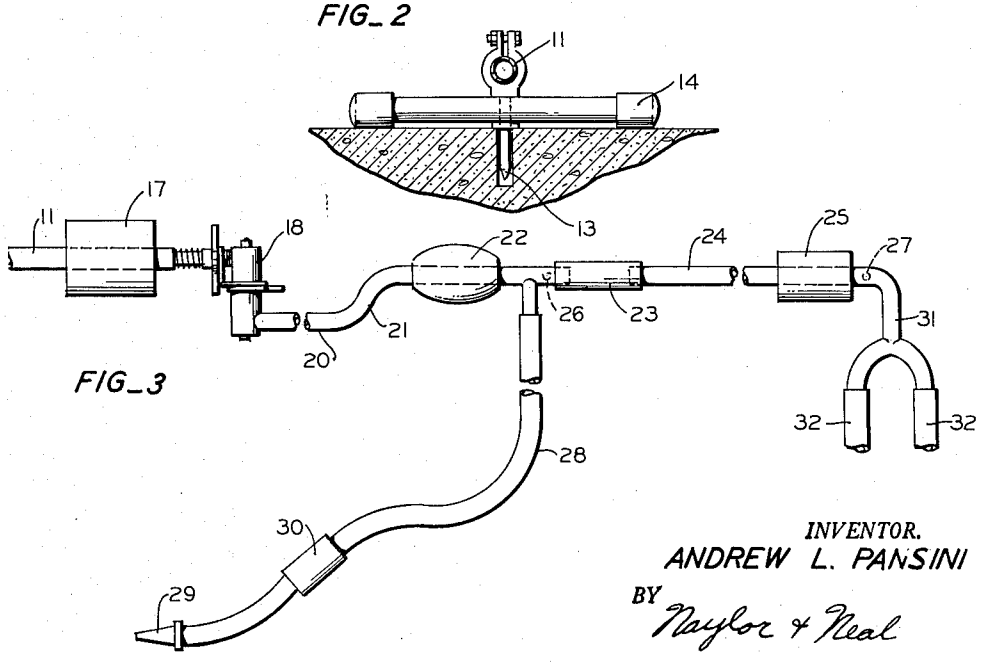

FIG_3

INVENTOR.
ANDREW L. PANSINI
BY Naylor & Neal
ATTORNEYS

March 21, 1961 A. L. PANSINI 2,975,791

AUTOMATIC SWIMMING POOL CLEANER

Filed July 2, 1959 3 Sheets-Sheet 2

FIG_4

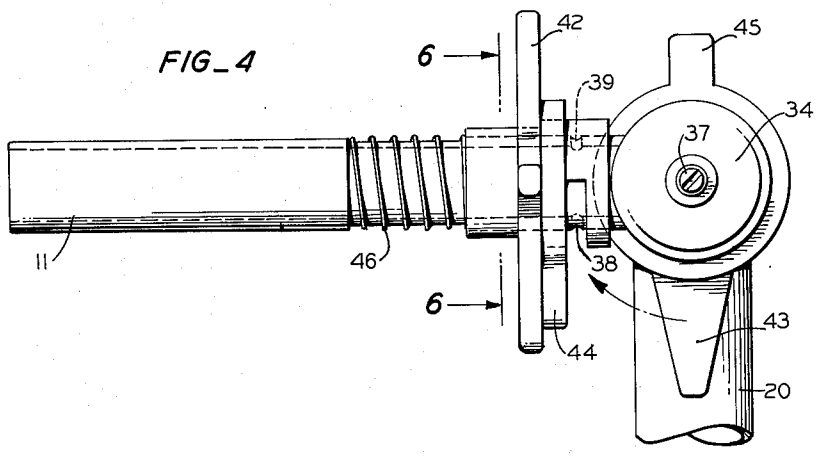

FIG_5

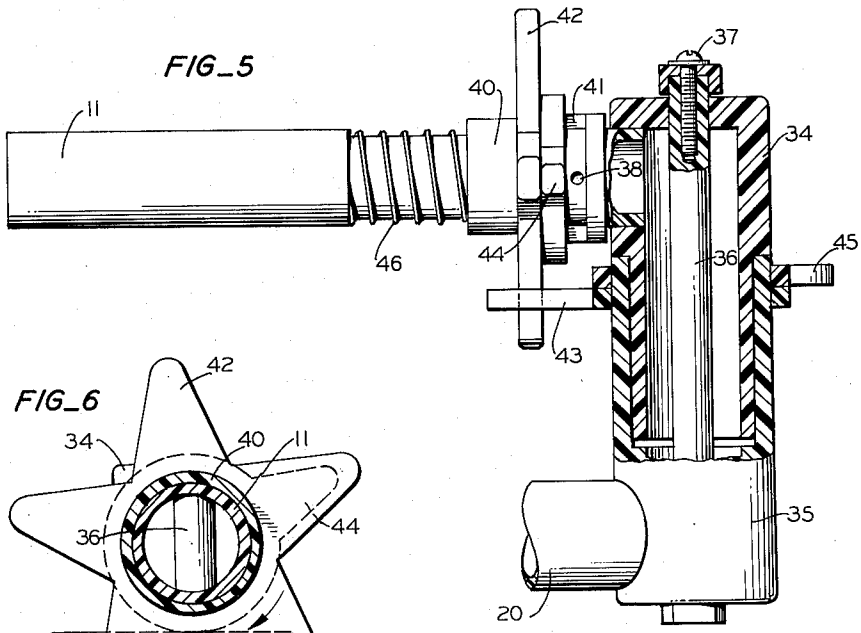

FIG_6

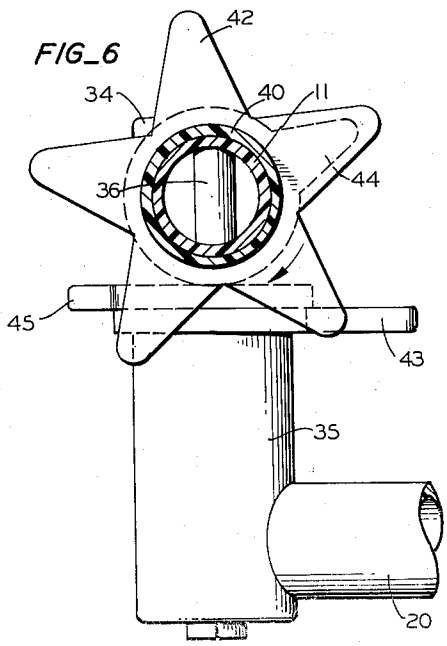

INVENTOR.
ANDREW L. PANSINI

BY Naylor & Neal

ATTORNEYS

March 21, 1961 A. L. PANSINI 2,975,791

AUTOMATIC SWIMMING POOL CLEANER

Filed July 2, 1959 3 Sheets-Sheet 3

FIG_7

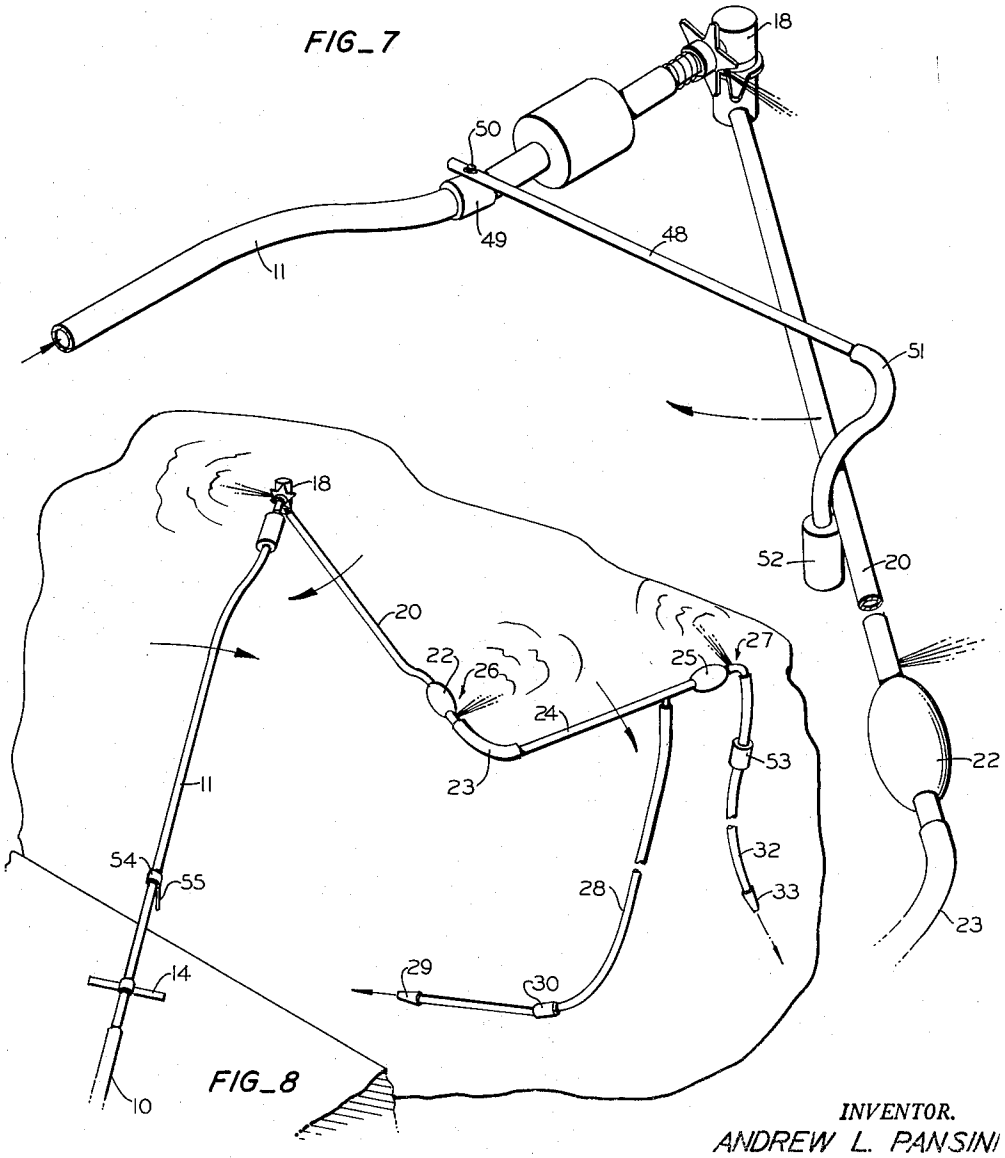

FIG_8

INVENTOR.
ANDREW L. PANSINI
BY
Naylor & Neal
ATTORNEYS

United States Patent Office 2,975,791
Patented Mar. 21, 1961

2,975,791

AUTOMATIC SWIMMING POOL CLEANER

Andrew L. Pansini, 180 Los Cerros Drive, Greenbrae, Calif.

Filed July 2, 1959, Ser. No. 824,562

17 Claims. (Cl. 134—167)

This invention relates, as indicated, to an automatic cleaner for swiming pools, and more particularly to improvements in the type of automatic swimming pool cleaner disclosed and claimed in my co-pending application, Serial Number 734,772, filed May 12, 1958. This application is a continuation-in-part of said co-pending application.

My above-identified co-pending application discloses an automatic cleaner for swimming pools in which accumulated scum and dirt are cleaned from the side walls and bottom of the pool by the water spray issuing from a discharge nozzle attached to a flexible hose. The scum and dirt are dispersed in the water in the pool and removed therefrom through the conventional pool filtering system which is preferably used in conjunction with the pool cleaner. The hose is supported by a float in the pool which conveys the hose to different portions of the pool. While the automatic cleaner disclosed in said co-pending application is highly efficient and results in very thorough cleaning of the interior surfaces of the pool, it has now been found that much more efficient cleaning of the interior surfaces of the pool can be obtained by controlling more accurately the positioning of the hose in the pool and its transportation from point to point in the pool.

Accordingly, it is the principal object of the present invention to provide means for automatically removing the accumulated scum and dirt from the pool sides and bottom and dispersing the same in the water for handling by the pump filter system.

It is a further object of this invention to provide new and improved support means for the flexible hoses in my automatic swimming pool cleaner whereby the cleaning nozzles on said hoses may have more complete access to all portions of the side walls and bottom of the pool.

It is still a further object of the invention to provide improved positioning and control means whereby the flexible hoses in the cleaner may be moved periodically from place to place in the pool in order to effect more efficient cleaning of the pool surfaces.

It is another object of this invention to so coordinate the hose supporting means and the positioning and control means to obtain more efficient cleaning of the interior surfaces of the pool.

Other objects and advantages of the present invention will become more apparent from the following description read together with the attached drawings, in which:

Figure 1 is a plan view of a swimming pool containing an improved automatic cleaner of this invention;

Figure 2 is a cross sectional view of the apparatus of Figure 1 taken upon the plane and in the direction indicated by the line and arrows at 2—2 in Figure 1;

Figure 3 is a more detailed fragmentary view of important elements of the cleaner illustrated in Figure 1;

Figure 4 is a top plan view of the rotary means employed in the positioning and control portion of the cleaner illustrated in Figure 1;

Figure 5 is a side elevational view partially in cross section of the structure illustrated in Figure 4 and in which two of the elements of the structure illustrated in Figure 4 have been rotated 90° with respect to each other;

Figure 6 is a cross sectional view of the structure illustrated in Figure 4 taken upon the plane and in the direction of the line and the arrows at 6—6 in Figure 4;

Figure 7 is a perspective view of the improved cleaner employing additional control means; and

Figure 8 is a plan view of an alternative form of the cleaner of this invention.

Referring now in detail to Figures 1 through 4, a fluid supply line 10 is connected to a rigid pipe 11 which is pivotally secured to the deck 12 of a pool by means of pivot pin 13 (Fig. 2), and the pipe 11 is provided with a horizontal support pipe 14 resting against the deck 12 of the pool to prevent the pipe 11 from rotating about its axis. A flexible tie member or cord 15 is provided with one end anchored to the side of the pool at 16 and the other end secured to the pipe 11 thereby limiting the travel of pipe 11 to the angle subtended by the two positions of pipe 11 illustrated in Figure 1. The movable end of pipe 11 is provided with a float 17 to support pipe 11 on the surface of the water in the pool. The free end of pipe 11 is connected to rotary means 18 illustrated in detail in Figures 4 through 6 and referred to in more detail hereinafter.

The rotary means 18 is provided with a fluid discharge port to which is connected rigid conduit 20. As illustrated in Figure 3, rigid conduit 20 is provided with a curved portion 21 which permits the conduit 20 to be supported on the surface of the pool by float 22 while the inner portion of conduit 20 is free to clear float 17 as it rotates about rotary means 18. A flexible coupling 23 is provided at the outer end of conduit 20 and a rigid conduit 24 is connected to conduit 20 by means of flexible coupling 23. The outer end of conduit 24 carries a float 25 which supports the conduit 24 on the surface of the pool. The length of conduit 20 is less than the minimum distance between rotary means 18 and the side of the pool, and the combined length of conduits 20 and 24 is greater than the maximum distance from each point on the edge of the pool wall to the nearest approach of rotary means 18 to such point.

Conduits 20 and 24 are provided with jet orifices 26 and 27, respectively, near their outer ends. Connected to conduit 20 and hanging therefrom in pendant relation is a flexible hose 28 carrying at its lower end a discharge nozzle 29 and provided intermediate of its ends with a metallic weight 30 adjustably clamped onto the side of the hose. Hose 28 is of sufficient length to reach the bottom of the pool, and weight 30 holds hose 28 down on the bottom of the pool. Connected to the free end of conduit 24 is a split delivery conduit 31 to each side of which is attached a flexible hose 32 which carries at its lower end a delivery nozzle 33. Preferably one of the hoses 32 is shorter than the other hose 32.

Referring now in detail to Figures 4 through 6, the rotary means, illustrated at 18 in Figures 1 and 3, comprises an inner tube 34 telescopically engaging an outer tube 35 and rigidly connected to the fluid supply pipe 11. A securing rod 36 is provided axially through the tubes 34 and 35 and is provided with a restraining screw 37 to prevent axial separation of the tubes 34 and 35. The fluid supply conduit 11 is provided with two diametrically opposed jet orifices 38 and 39 adjacent to the inner tube 34. A sleeve 40 is provided on the pipe 11 over the orifices 38 and 39 and has therein a slot 41 which extends around 180° of the circumference of the sleeve 40.

The slot 41 is in the same radial plane as the orifices 38 and 39 and is operable upon rotation of the sleeve 40 with respect to the pipe 11 to alternately open and close the orifices 38 and 39. A star wheel 42 is fixedly secured on the sleeve 40 and a finger 43 is fixedly secured on the outer tube 35 positioned to engage star wheel 42 when tube 35 is rotated relative to tube 34. A ring having a finger 44 is provided on the sleeve 40 between the star wheel 42 and the inner tube 34, and a ring having a short finger 45 is provided on outer tube 35 diametrically opposed to finger 43. The ring elements carrying the fingers 44 and 45 are frictionally fitted on sleeve 40 and on tube 35 so as not to move relative thereto during operation of the rotary means 18, but said ring elements may be manually moved to adjust said fingers to new positions. A helical spring 46 is provided on pipe 11 spring biasing sleeve 40 toward inner tube 34.

When the improved swimming pool cleaner, described above, is in operation, fluid under pressure is supplied through line 10 and proceeds through pipe 11 through the central cavity in rotary means 18, hence conduits 20 and 24, and flexible hoses 28 and 32. The water passing through these passageways issues through jet orifices 26 and 27, delivery nozzles 29 and 33, and one of the opposed jet orifices 38 and 39 depending on the position of sleeve 40, the rate of flow through each aperture depending on its diameter and the rates of flow through the remainder of the system. As illustrated by the arrow 47 in Figure 1, water is issuing from jet orifice 39 and the sleeve 40 is covering jet orifice 38, and therefore, as illustrated in Figure 1, the jet issuing from orifice 39 will cause pipe 11 to rotate about pin 13 until pipe 11 has moved to the dotted position indicated at 11'. While this movement is progressing, the jets issuing from orifices 26 and 27 cause conduits 20 and 24 to rotate clockwise carrying with them flexible hoses 28 and 32, and during such rotation fluid emanating from nozzles 29 and 33 continuously remove dirt and scum particles from the bottom and sides of the pool.

The rotation of conduits 20 and 24 around rotary means 18 causes finger 43 to rotate the star wheel 42 and sleeve 40 of rotary means 18. After pipe 11 and rotary means 18 have reached the other end of the pool at 11' and 18', rotation of conduits 20 and 24 will continue until sleeve 40 has been rotated to cover orifice 39 and uncover orifice 38 at which time the jet stream emanating from orifice 38 will cause pipe 11 and rotary means 18 to move back toward the right hand position illustrated in Figure 1.

It should be noted that with the provision of five points on star wheel 42 and the provision of finger 44 on sleeve 40 and finger 45 on tube 35, conduits 20 and 24 are permitted to complete one more revolution in one end of the pool than they complete in the other end of the pool. For instance, if star wheel 42 is set so that the extra revolution of conduits 20 and 24 will be done in the deep end of the pool, the conduits 20 and 24 will complete two and a half revolutions in the deep end of the pool for every one and a half revolutions in the shallow end of the pool. In this manner it is possible to effect more efficient cleaning of the pool by setting the star wheel in such a position that rotary means 18 and the cleaning hoses with it will remain for a longer period of time in places more difficult to clean than in places which are cleaned more easily. Every 360° turn of the sleeve 40 requires four rotations of tube 35. During these four rotations the sleeve is given five advancing impulses, four of them by finger 43 engaging the star wheel fingers and one by finger 45 engaging finger 44. This co-action of fingers 44 and 45 decreases by one revolution the time during which one of the orifices 38, 39 is open. If finger 45 is manually moved into overlying relation with finger 43, a full turn of sleeve 40 will require five revolutions of tube 35.

When the rotary means 18 is not being used in the pool, finger 43 will get out of mesh with the star wheel. To prevent finger 43 from snapping off a finger of the star wheel as it is manually moved toward mesh relation with the wheel, spring 46 is provided to permit yielding movement of sleeve 40 on conduit 11.

The provision of the flexible coupling 23 between rigid conduits 20 and 24 permits the flexible hoses 28 and 32 to clean the walls of the pool efficiently regardless of the shape of the pool. Rotary means 18 is prevented from approaching the sides of the pool by a distance equal to the length of conduit 20 because flexible cable 15 restricts the angle through which pipe 11 can move. Therefore, at no time during its rotation does conduit 20 strike the walls of the pool and hence the movement of the conduit 20 is not interrupted by contact with the wall of the pool. However, conduit 24 extending from the end of conduit 20 is permitted to follow the side wall of the pool as it rotates about rotary means 18 without interrupting the travel of conduits 20 and 24 because at any point when conduit 24 is in contact with the wall of the pool, flexible coupling 23 can bend, thus permitting conduit 24 to move along the wall of the pool unobstructed.

As illustrated above, the star wheel on rotary means 18 and the mechanism associated therewith controls the movement of rotary means 18 back and forth across the pool so that the cleaning nozzles on hoses 28 and 32 can be maintained for a longer period of time in parts of the pool that are difficult to clean than in parts of the pool that are more easily cleaned. Similarly, the apparatus illustrated in Figure 7 permits the delaying of the travel of conduit 20 during an arcuate portion of its rotation about rotary means 18 in order to clean more efficiently some difficultly cleanable portion of the pool in that area. The apparatus in Figure 7 includes a rigid rod 48 attached to pipe 11 by means of collar 49 and bolt 50. Suspended from the free end of rod 48 is a flexible member 51 carrying at its lower end a selectively adjustable metallic weight 52. In operation of the automatic cleaner, the motion of conduit 20 will be retarded as it moves past flexible member 51 because of the frictional resistance encountered in pushing flexible member 51 and weight 52 aside.

As illustrated in Figure 8, the alternative form of this invention illustrated therein differs from that illustrated in Figure 1 in that the flexible hose 28 is not connected to conduit 20 but instead is connected to the middle portion of conduit 24 and only one flexible hose 32 is provided on the outer end of conduit 24. The provision of flexible hoses in these positions is often more desirable than the arrangement shown in Figure 1 in order to effect more efficient cleaning of a pool of particular dimensions. It should be noted that the structure illustrated in Figure 8 is also provided with a metallic weight 53 on flexible hose 32 a short distance from the top thereof; this metallic weight 53 insures that hose 32 will remain in the water and the sinuous movement of the hose and its nozzle 33 will be controlled to effect more efficient cleaning of the walls of the pool, and hence nozzle 33 will not leave the surface of the water to spread its fluid stream on adjacent areas. It should also be noted that in the structure illustrated in Figure 8 the flexible cable 15 is not used to limit the path of pipe 11 but instead a collar 54 is provided on pipe 11 carrying a downwardly disposed pin 55 which contacts the wall of the pool to prevent movement of pipe 11 outside a predetermined arc.

While a number of embodiments of the invention have been shown and described, it will be appreciated that the invention is subject to further modification within the spirit of the invention and the range of equivalents to which it is entitled.

What is claimed is:

1. An automatic cleaner for a swimming pool comprising rotary means having fluid passageway means ex-

tending therethrough including a fluid discharge port, said rotary means being rotatable about a vertical axis, float means for supporting said rotary means on the surface of said pool, positioning means for limiting to a fixed distance the approach of said rotary means toward the side wall portions of said pool, a first rigid conduit extending from said discharge port and having a radial length less than said fixed distance, a second rigid conduit, the combined length of said first and second conduits substantially exceeding said fixed distance, a flexible coupling connecting said first and second conduits, second float means for supporting said conduits, laterally directed jet orifice means connected to at least one of said conduits adapted to rotate said conduits about said rotary means, and a flexible hose connected to said second conduit at the end thereof remote from said first conduit and having a submergible length portion carrying a discharge nozzle.

2. The automatic cleaner of claim 1 characterized further by the provision of a second flexible hose connected to said conduits at a point intermediate of said rotary means and said first flexible hose, said second flexible hose carrying a second discharge nozzle and having a submergible length portion of sufficient length to engage the bottom of said pool.

3. The automatic cleaner of claim 1 in which said positioning means comprises a third rigid conduit pivotally connected to the side portion of said pool and connected to said rotary means and a flexible tie member secured to the side portion of said pool and connected at its other end to a point on said third conduit.

4. The automatic cleaner of claim 1 in which said second float means is adjacent to said flexible coupling and a third float means is provided adjacent the end of said second conduit remote from said first conduit.

5. The automatic cleaner of claim 1 in which there is a laterally directed jet orifice in each of said conduits and said jet orifices face in the same direction when said first and second conduits are in alignment.

6. An automatic cleaner for a swimming pool comprising rotary means having fluid passageway means extending therethrough including a discharge port, said rotary means being rotatable about a vertical axis, positioning means for limiting to a finite path the movement of said rotary means in said pool, all points on said path being at least a fixed distance from the wall portions of said pool, float means for supporting said rotary means on the surface of said pool, a first rigid conduit extending from said discharge port and having a radial length less than said fixed distance, a second rigid conduit, the combined length of said first and second conduits being substantially greater than said fixed distance, a flexible coupling connecting said first and second conduits, second float means for supporting said conduits, a flexible hose connected to said second conduit at the end thereof remote from said first conduit and having a submergible length portion carrying a discharge nozzle, laterally directed jet orifice means connected to at least one of said conduits adapted to rotate said conduits about said rotary means, opposed jet orifices on said rotary means for propelling said rotary means in both directions along said path, and control means for alternately opening and closing said opposed jet orifices responsive to the number of revolutions said conduits make around said rotary means.

7. The automatic cleaner of claim 6 in which there is provided in each of said conduits a laterally directed jet orifice which face in the same directions when said conduits are in alignment.

8. The automatic cleaner of claim 6 in which said second float means is adjacent to said flexible coupling and a third float means is provided adjacent the end of said second conduit remote from said first conduit.

9. The automatic cleaner of claim 6 characterized further by the provision of a second flexible hose connected to said conduits at a point intermediate of said rotary means and said first flexible hose, said second flexible hose carrying a second discharge nozzle and having a submergible length portion of sufficient length to engage the bottom of said pool.

10. The automatic cleaner of claim 6 in which said positioning means comprises a third rigid conduit pivotally connected to the side portion of said pool and connected to said rotary means and a flexible connector secured to the side portion of said pool and connected at its other end to a point on said third conduit.

11. The automatic cleaner of claim 6 in which said rotary means comprises a first tube and second tube mounted together for relative rotation about a common axis, means preventing axial separation of said tubes, a first pipe extending from said first tube, a second pipe extending generally radially from said second tube at a point thereon remote from said first tube.

12. The automatic cleaner of claim 11 in which said opposed jet orifices on said rotary means are located in said second pipe and are directed in opposite directions along a line generally perpendicular to the axis of said second pipe and said axis of said tubes, and said control means comprises a sleeve on said second pipe rotatable with respect thereto and overlying said opposed orifices, said sleeve being provided with a slot therein alignable alternately with said orifices by rotation of said sleeve about said pipe, a star wheel on said sleeve and a finger on said first tube positioned to engage said star wheel upon relative rotation of said tubes.

13. The automatic cleaner of claim 12 characterized further by the provision of means with said control means for maintaining said slot in alignment with one of said opposed orifices for a greater period of time than with the other of said opposed orifices, said means with said control means comprising a finger carried by said sleeve between said star wheel and said second tube and a second finger carried by said first tube shorter than the distance between said first tube and said star wheel but longer than the distance between said first tube and said finger on said sleeve.

14. An automatic cleaner for a swimming pool comprising rotary means having fluid passageway means extending therethrough including a discharge port, said rotary means being rotatable about a vertical axis, positioning means for limiting to a finite path the movement of said rotary means in said pool, float means for supporting said rotary means on the surface of said pool, a rigid conduit extending generally radially from said discharge port and carrying a laterally directed jet orifice adapted to rotate said conduit around said rotary means, second float means for supporting said conduit, a flexbile hose connected to said conduit and having a submergible length portion sufficiently long to engage the bottom of said pool and carrying a discharge nozzle, opposed jet orifices on said rotary means for propelling said rotary means in both directions along said path, and control means for alternately opening and closing said opposed jet orifices responsive to the number of revolutions said conduit makes around said rotary means.

15. The automatic cleaner of claim 14 in which said rotary means comprises a first tube and a second tube mounted together for relative rotation about a common axis, means preventing axial separation of said tubes, a first pipe extending from said first tube, a second pipe extending generally radially from said second tube at a point thereon remote from said first tube.

16. The automatic cleaner of claim 15 in which said opposed jet orifices on said rotary means are located in said second pipe and are directed in opposite directions along a line generally perpendicular to the axis of said second pipe and said axis of said tubes, and said control means comprises a sleeve on said second pipe rotatable with respect thereto and overlying said

opposed orifices, said sleeve being provided with a slot therein alignable alternately with said orifices by rotation of said sleeve about said pipe, a star wheel on said sleeve and a finger on said first tube positioned to engage said star wheel upon relative rotation of said tubes.

17. The automatic cleaner of claim 16 further characterized by the provision of means with said control means for maintaining said slot in alignment with one of said opposed orifices for a greater period of time than with the other of said opposed orifices, said means

with said control means comprising a finger carried by said sleeve between said star wheel and said second tube and a second finger carried by said first tube shorter than the distance between said first tube and said star wheel but longer than the distance between said first tube and said finger on said sleeve.

References Cited in the file of this patent

FOREIGN PATENTS

925,208 Germany ---------- Mar. 14, 1955