W. S. SUTTON.

METHOD OF CLEANING SCREENS OF VACUUM CLEANING APPARATUS.

APPLICATION FILED JAN. 2, 1912. RENEWED AUG. 17, 1915.

1,157,131. Patented Oct. 19, 1915.

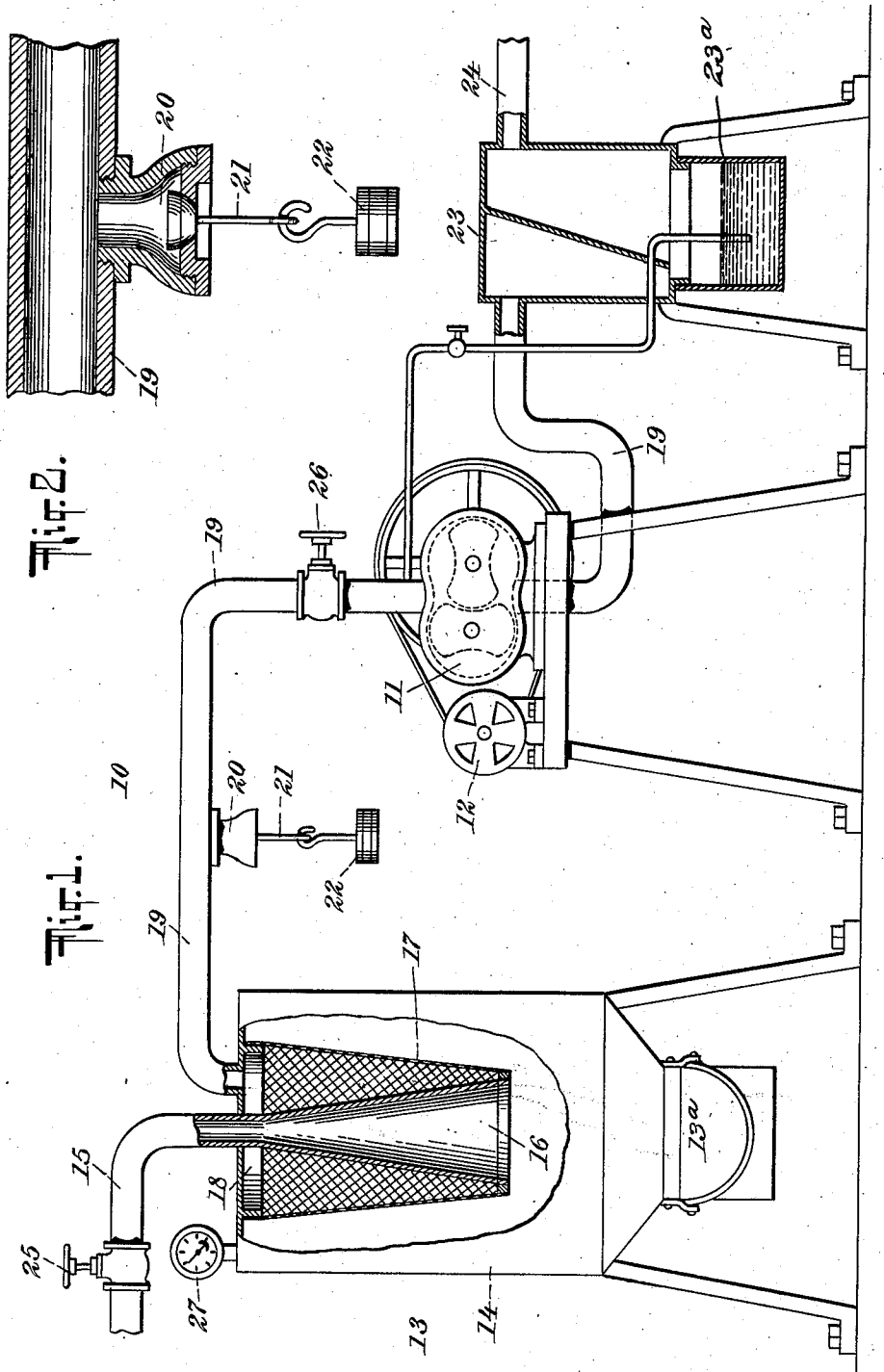

Fig. 2.

Fig. 1.

WITNESSES

Edwin H. Dietrich.

Elenor M. Chase.

INVENTOR

WILLIAM S. SUTTON

BY

Conrad A. Dietrich

his ATTORNEY

UNITED STATES PATENT OFFICE.

WILLIAM S. SUTTON, OF ROCKFORD, ILLINOIS, ASSIGNOR TO HOUSTON MANUFACTURING COMPANY, A CORPORATION OF ILLINOIS.

METHOD OF CLEANING SCREENS OF VACUUM CLEANING APPARATUS.

1,157,131. Specification of Letters Patent. Patented Oct. 19, 1915.

Application filed January 2, 1912, Serial No. 668,891. Renewed August 17, 1915. Serial No. 46,017.

To all whom it may concern:

Be it known that I, WILLIAM S. SUTTON, a citizen of the United States, residing at Rockford, in the county of Winnebago, State of Illinois, have invented certain new and useful Improvements in Methods of Cleaning Screens of Vacuum Cleaning Apparatus, of which the following is a full, clear, and exact specification.

My invention relates to improvements in pneumatic cleaning systems, and the same has for its object more particularly to provide a simple, rapid and effective method of cleaning the screen which serves to separate the dust and other solid matter from the air by means of which the same is removed and conducted from the surface operated upon to the separator.

Further, said invention has for its object to provide a method of cleaning the screen by violently agitating the same by means of sudden pulsations or compression shocks produced by air admitted to the separator at atmospheric pressure and directed against said screen from within in the direction opposite to that of the flow of air during the time the apparatus is in use for cleaning purposes.

It has been found in the ordinary operation of the vacuum cleaner that after a short period of use the screen within the separator becomes clogged by reason of dust and other fine particles of solid matter adhering to or becoming embedded in the fabric thereof. When this occurs the free passage of the air through the screen is prevented, and the proper operation of the apparatus interfered with. To overcome this, the screen must be thoroughly cleaned of such matter.

One of the principal objects of my present invention is to provide a method which does not necessitate taking the separator apart each time to clean the screen.

To the attainment of the foregoing objects and ends, my invention consists in the successive steps and operations hereinafter more fully described and then pointed out in the claims.

In the accompanying drawings forming part of this specification, wherein like numerals of reference indicate like parts, Figure 1 is a diagrammatic view showing one form of apparatus adapted for use in carrying out my said invention, and Fig. 2 is an enlarged detail central vertical section showing the construction of the valve arranged intermediate the separator and the suction apparatus.

In said drawings 10 designates a vacuum cleaning apparatus comprising a suction pump 11, an electric motor 12 for operating said suction pump, a separator 13 consisting of an outer casing or receptacle 14 having an intake pipe 15 connected to the top thereof, and provided with a valve 25, and a funnel shaped end 16 arranged within said receptacle or casing 14.

17 denotes a cylindrical screen made of close mesh fabric, or other suitable material, which will arrest the passage of dust or solid matter, but will permit of the passage of air therethrough. The said screen is secured along its lower edge to the lower edge of the funnel shaped end 16, and at its upper edge to a circular flange 18 depending from the top of the receptacle or casing 14.

19 denotes a pipe connected at one end to the upper end of the separator casing 14, and communicating with the interior of the screen 17, and its other end, which includes the suction pump 11, is connected with a muffler or separator 23. 26 denotes a valve arranged in said pipe between said separator 13 and pump 11.

20 denotes an inwardly-opening, quick-acting valve arranged in the pipe 19, intermediate the separator and suction pump, and provided with a projecting stem 21 which serves as a handle for operating said valve. From the end of said handle 21 depends a removable weight 22 which serves to maintain said valve normally seated.

23 denotes a muffler and collector for any liquid matter, or any solid matter, which may pass through the screen 17 of the separator 13, and 24 denotes an outlet pipe extending from the muffler or collector 23 through which the purified air is discharged. Both the separator 13 and the muffler 23 are provided at their bases with detachable receptacles 13^a, 23^a, respectively.

When the apparatus is in operation, the dust laden air is received from the tool or renovator through the pipe 15, flaring end 16, and then discharged into the receptacle 13, while the air passes through the screen

17, pipe 19, suction pump 11, muffler 23, and is finally discharged, relieved of all dust and solid matter, through the outlet pipe 24.

In the ordinary course of operation, a certain quantity of dust is usually caused to become embedded in, and to adhere to the outer surface of the screen 17, and this, after a while, will prevent the screen operating properly to separate dust from the air passing through the receptacle 13. To overcome this, the screen 17 must be thoroughly and effectively cleaned from time to time and to this end the mere reversing of the flow of air by means of the pump 11 is not effective because a considerable quantity of the dust adheres so tightly to the screen that it can only be removed by more or less violently agitating or shaking the screen itself in order to dislodge the matter so adhering thereto, or which has partly entered into the fabric of the screen.

I have found that the necessary agitating or shaking action of the screen is best accomplished by causing a series of sudden inrushes of air to enter the separator, and pass through the screen therein in a direction opposite to that of the flow of the air while the apparatus is in operation and the pump acting as a suction apparatus. By causing such series of sudden inrushes of air, I am enabled to produce a succession of pulsations or compression shocks within the screen which serve to dilate, and more or less violently agitate the screen, and at the same time cause the air passing through said screen to coöperate therewith in removing all solid matter embedded in the fabric of the screen or adhering to the outer surface thereof. To accomplish this result, I provide a quick-acting inwardly-opening valve 20 in the pipe 19 leading from the top of the separator 13 to the suction pump 11, and provide said valve with a projecting stem 21 which forms a handle by means of which, when said handle is oscillated, the valve may be quickly opened and closed a number of times to allow of sudden inrushes of air within the receptacle 13, and to enter the screen 17, and thereby cause the latter to be dilated and then permitted to return to its normal state a number of times under the influence of the series of compression shocks or impulses produced by the inrushing air.

In carrying out my method, I first cause the intake pipe 15 to be sealed either by a separate valve as 25, which may be located at any desirable point between the separator 13 and the implement or renovator (not shown) which communicates with said intake pipe 15. Next, I secure the valve 20 against accidental unseating, as for example, by adding weight to the weights 22. Hereupon the valve 26, located in the pipe 19, extending from the separator to the suction pump 11, is opened, and the suction pump then set in operation to exhaust the separator 13. As soon as the air has been fully exhausted, which will be indicated by the vacuum gage 27 on said separator, the valve 26 is then closed, and the operation of the suction pump discontinued. At this stage of the operation, the separator 13 will be substantially entirely exhausted of air, and the access of air thereto prevented by maintaining the valve 25 in the intake valve 15, and the valve 26 in the pipe 19 closed. Hereupon the valve 20 is operated by repeatedly oscillating the handle or stem 21 in order to permit air at atmospheric pressure to enter the pipe 19 suddenly and pass into the screen 17, and in so doing cause the sides of said screen to be violently dilated or agitated with each inrush of air at the valve 20, and the sudden closing thereof again. By this action a series of pulsations or compression shocks are produced within the screen by the inrushing air entering the same and passing through it in a direction opposite to that of the flow of air during the exhausting action. The flow of air in the reverse direction through the screen serves to relieve the screen of all solid matter adhering to the fabric thereof, or partly embedded therein. The solid matter and dust thus removed from the screen is then caused to collect in the detachable receptacle 13ª connected to the bottom of the separator casing 14.

The operation above described may be repeated until there no longer exists a difference in air pressures within and without the separator 13. If the screen has not been properly cleaned by the operation above described and further cleaning is necessary, it merely becomes necessary to exhaust the receptacle 13 again as first hereinabove described, and then continue the operation described.

Having thus described my invention, what I claim and desire to secure by Letters Patent, is:

1. The method of cleaning the screen in the separator of a vacuum cleaning apparatus which consists in sealing the air intake, exhausting the air from said separator, discontinuing said exhausting operation and sealing said separator, and then causing a series of sudden inrushes of air, at atmospheric pressure, to enter said separator in a direction opposite to that of the flow of air during said exhausting operation whereby to produce a series of pulsations or compression shocks within said separator acting upon said screen to dislodge solid matter adhering thereto, substantially as specified.

2. The method of cleaning the screen in the separator of a vacuum cleaning apparatus which consists in sealing the air intake, exhausting the air from said separator by means of a suitable exhausting ap-

paratus, discontinuing said exhausting operation, sealing said separator against the inflow of air from said exhausting apparatus, and then interruptedly admitting air at atmospheric pressure to said separator at a point intermediate said separator and exhausting apparatus and causing the same to enter the screen therein and successively dilating the same by means of the produced series of pulsations or compression shocks in order to dislodge solid matter adhering to said screen, substantially as specified.

3. The method of cleaning the screen in the separator of a vacuum cleaning apparatus having a relief valve intermediate said separator and its exhausting apparatus, which consists in sealing the air intake, exhausting the air from said separator, discontinuing said exhausting operation, sealing said separator against the inflow of air from said exhausting apparatus, and then actuating said relief valve whereby to admit air at atmospheric pressure interruptedly to said separator to produce a series of air impulses adapted to enter the screen therein and successively dilate the same in order to dislodge solid matter adhering to said screen, substantially as specified.

4. The method of cleaning the screen in the separator of a vacuum cleaning apparatus which consists in sealing the air intake, exhausting the air from the separator, sealing the air exhaust, and then causing a series of sudden inrushes of air successively to enter the separator in a direction opposite to that of the flow of air during the exhausting operation whereby the screen is subjected to a series of successive shocks which agitate the screen and dislodge solid matter adhering thereto, substantially as specified.

5. The method of cleaning the screen in the separator of a vacuum cleaning apparatus which consists in sealing the air intake, exhausting the air from the separator, sealing the air exhaust, and then causing a sudden inrush of air to enter the separator in a direction opposite to that of the flow of air during the exhausting operation whereby the screen is agitated to dislodge solid matter adhering thereto, substantially as specified.

Signed at Chicago, in the county of Cook, and State of Illinois, this twentieth day of December nineteen hundred and eleven.

WILLIAM S. SUTTON.

Witnesses:
A. E. HALLOWELL,
F. J. KEARNS.