(No Model.)

U. G. McQUEEN.

SASH CORD GUIDE.

No. 590,329. Patented Sept. 21, 1897.

Fig. 1.

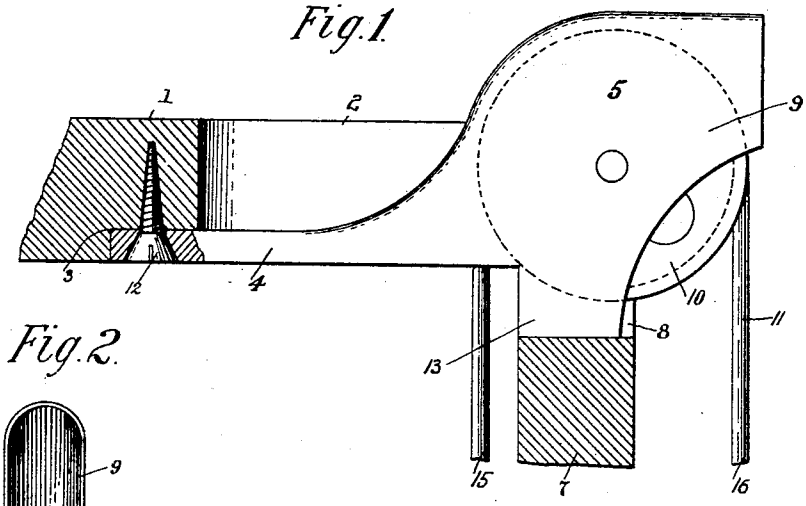

Fig. 2.

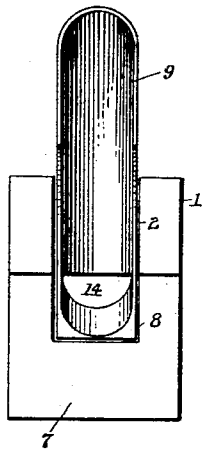

Fig. 3.

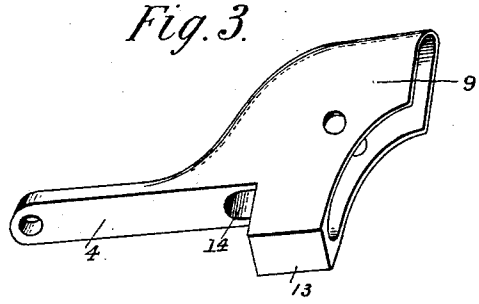

WITNESSES:

Norris A. Clark

R. E. Rogers

INVENTOR

Ulysses G. McQueen

BY

Charles A. Rogers

ATTORNEY

THE NORRIS PETERS CO., PHOTO-LITHO., WASHINGTON, D. C.

UNITED STATES PATENT OFFICE.

ULYSSES G. McQUEEN, OF ELIZABETH, NEW JERSEY.

SASH-CORD GUIDE.

SPECIFICATION forming part of Letters Patent No. 590,329, dated September 21, 1897.

Application filed June 10, 1897. Serial No. 640,232. (No model.)

To all whom it may concern:

Be it known that I, ULYSSES G. McQUEEN, a citizen of the United States, residing at Elizabeth, in the county of Union and State of New Jersey, have invented certain new and useful Improvements in Pulleys; and I do hereby declare the following to be a full, clear, and exact description of the invention, such as will enable others skilled in the art to which it appertains to make and use the same.

This invention relates to pulleys, and particularly to that class known as "sash-pulleys" adapted to be used in connection with window-sash and for similar purposes; and the objects of the invention are to provide a pulley of this class which can be employed where there is very small head-room or where the distance above the lintel of the window-frame is very short, thus requiring a pulley which will extend only a short distance above the lintel; also, to produce a pulley of this character provided with an extension base or support which is constructed to rest within a recess formed in the pulley-stile, thereby centering all of the strain upon the stile, and by means of the base extending thereinto the pulley is rigidly supported and prevented from lateral movement; and with these and other objects in view the invention consists in the construction and arrangements of parts hereinafter more fully described in the specification and illustrated in the accompanying drawings, in which—

Figure 1 is a side elevation of this improved pulley, showing the same in operative position. Fig. 2 is an end view of the pulley in operative position, and Fig. 3 is a perspective view of the pulley detached.

Similar characters of reference designate similar parts throughout the several views.

Referring to the drawings, the reference numeral 1 indicates the lintel of an ordinary window-frame, the end of which is cut away or slotted, as shown at 2, and the lower face or under side of the lintel is provided with a recess 3 to receive the extended portion or end 4 of the pulley-casing 5, as hereinafter described, and the bifurcated or slotted extremities of the lintel have formed therein notches or recesses 6, adapted to receive the upper end of the pulley-stile 7, which is provided with a notch or recess 8, as clearly shown in Figs. 1 and 2 of the drawings.

The pulley-casing 5 consists of a main portion or hood 9, within which is revolubly mounted a pulley-wheel 10, having either a flat or grooved periphery adapted to receive the suitable sash cord, band, or chain 11, and the main portion or hood 9 is extended to form the end 4, adapted to be secured within the recess 3 on the under side of the lintel, in which position it is secured by a screw or bolt 12, and the casing is provided with a depending projection or extension-base 13, which is securely retained within the notch 8 in the pulley-stile, and by means of this construction a firm bearing is afforded for the projection 13 and the casing is securely held against lateral movement, while the upward movement of the sash is not decreased, as the projection 13 is of the same width as the pulley-stile 7, and the sash can be elevated until it contacts with the under face of the lintel 1, whereby it will be seen that a geat economy of space is effected.

The pulley-casing is provided at the junction of the extended portion 4 and the depending projection 13 with an opening 14, through which the sash-cord 11 passes, and the end 15 of the sash-cord 11 is connected in any suitable manner with the upper bar or head of the sash, and to the end 16 of the sash-cord 11 is attached a weight or other suitable device.

By means of the specific construction of the parts herein shown and described less head-room or space above the lintel of the window-frame is required, which is most essential in the present architectural construction, and the upward movement of the sash is not decreased, but the same can be forced upward into contact with the under surface of the lintel of the window-frame, as before explained; also, greater rigidity is secured for the casing, and the under surface of the lintel is not marred, all of which characteristics constitute the most essential advantages, as has been demonstrated by years of actual practice.

Having accurately described my invention, what I claim as new, and desire to secure by Letters Patent, is—

1. A pulley provided with a casing having

an attaching extension adapted to be secured to the under face of the lintel of a window-frame, said casing extending above said extension to form a hood, and having a depending extension base or support in a plane below said attaching extension and a pulley mounted within the hood and projecting into the extension base or support so that the periphery thereof lies below the lintel.

2. The combination with a slotted lintel having a recessed under face and a notched pulley-stile, of a pulley-casing having an attaching extension adapted to be secured in said recessed under face of the lintel, said casing projecting above said attaching extension, and having a depending extension base or support in a plane below said attaching extension adapted to be secured within the notch in the pulley-stile, and a pulley mounted in the casing and projecting into the extension base or support so that the periphery thereof lies in a plane below the lintel of the window.

In testimony whereof I affix my signature in presence of two witnesses.

ULYSSES G. McQUEEN.

Witnesses:

CHARLES S. ROGERS,

K. E. ROGERS.