May 27, 1947. G. W. DUNHAM 2,421,251

SUPPORTING MEANS FOR VERTICAL AXIS WASHING MACHINE SPINNER BASKETS

Filed April 9, 1943 3 Sheets-Sheet 1

Fig. 1.

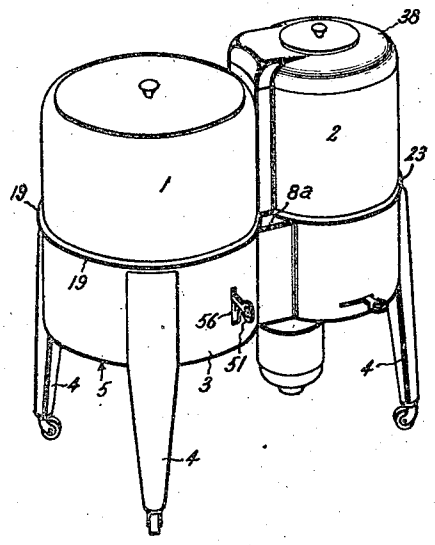

Fig. 3.

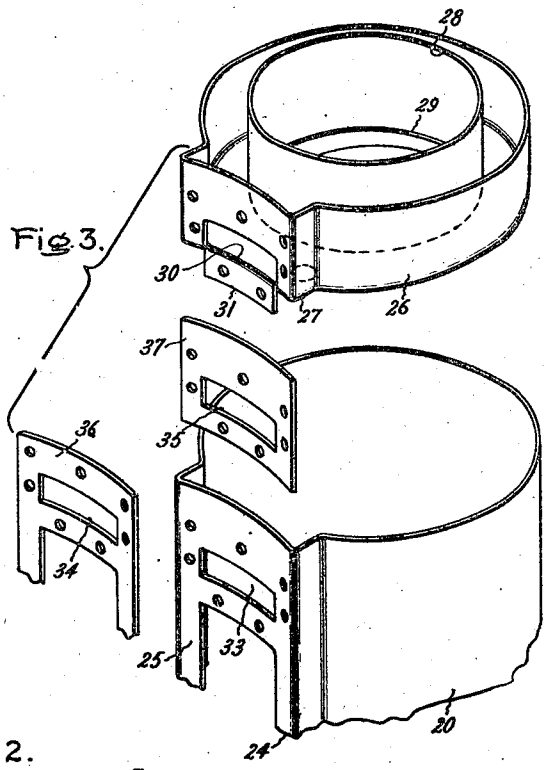

Fig. 2.

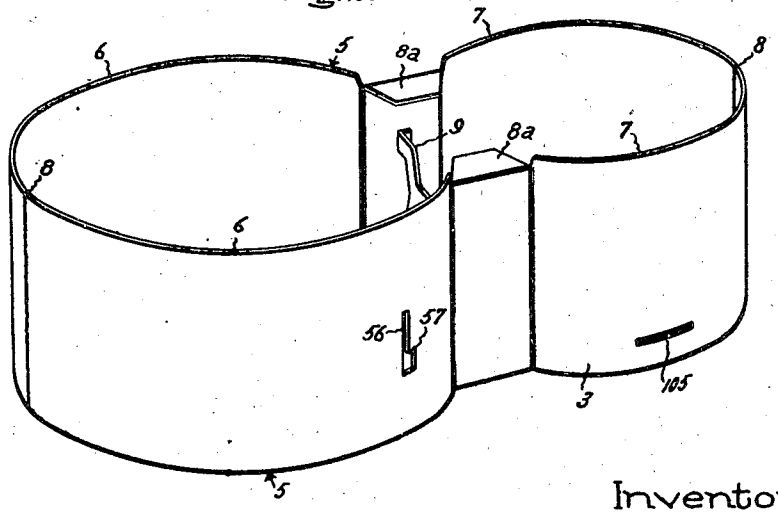

Inventor:
George W. Dunham,
by Harry E. Dunham
His Attorney.

May 27, 1947. G. W. DUNHAM 2,421,251

SUPPORTING MEANS FOR VERTICAL AXIS WASHING MACHINE SPINNER BASKETS

Filed April 9, 1943 3 Sheets-Sheet 2

Fig. 4.

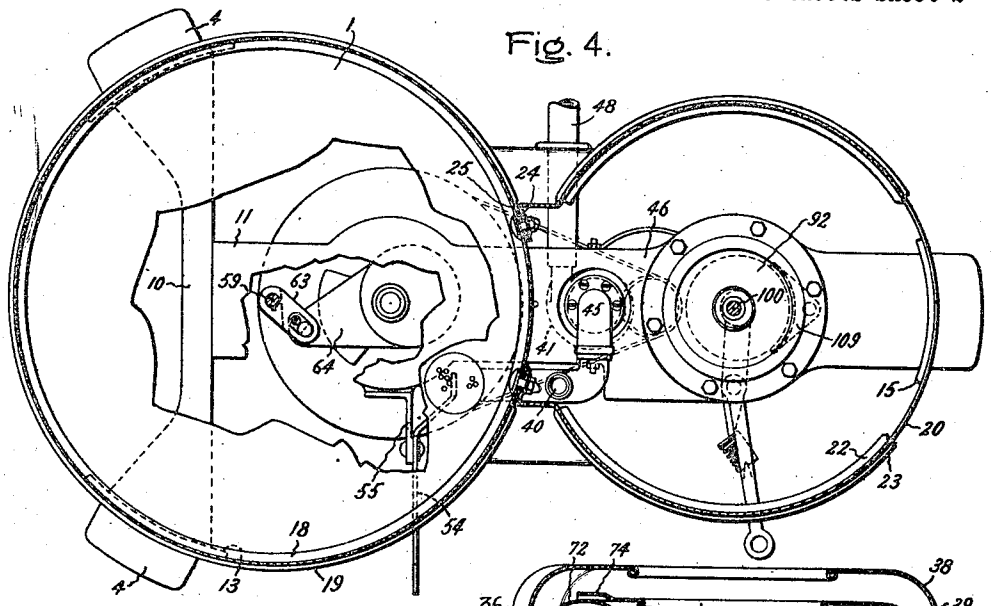

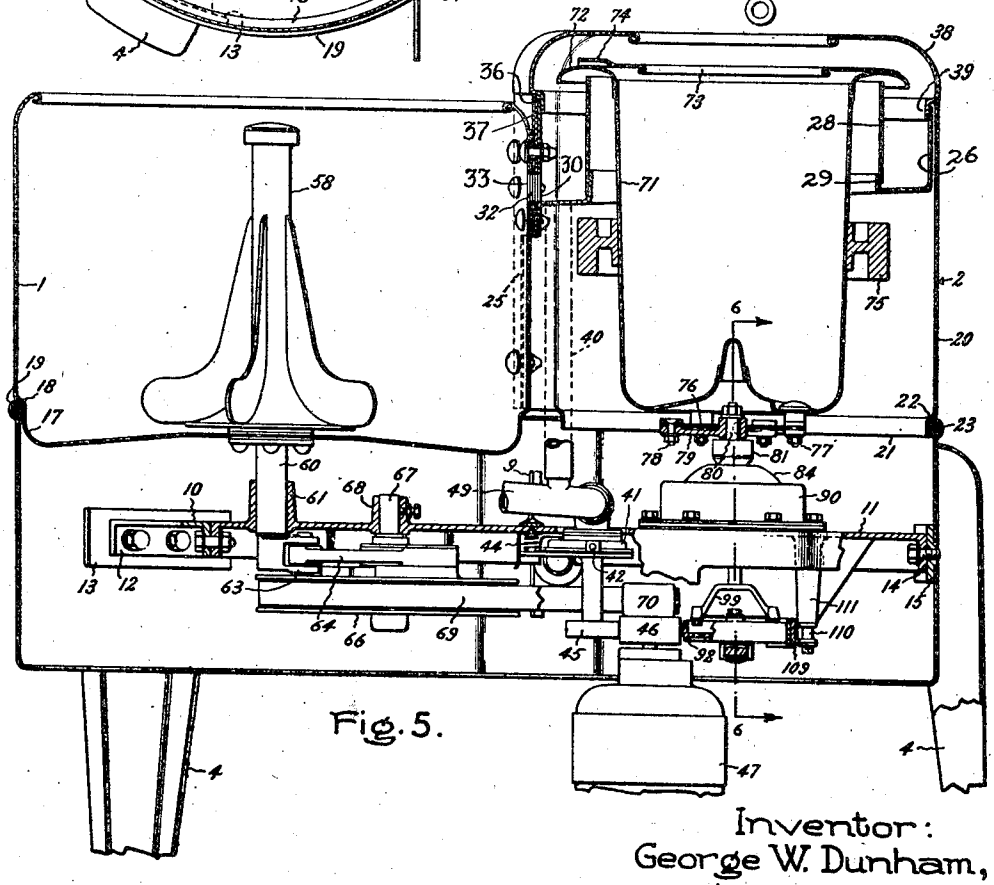

Fig. 5.

Inventor:
George W. Dunham,
by Harry E. Dunham
His Attorney.

May 27, 1947. G. W. DUNHAM 2,421,251

SUPPORTING MEANS FOR VERTICAL AXIS WASHING MACHINE SPINNER BASKETS

Filed April 9, 1943 3 Sheets-Sheet 3

Fig. 6.

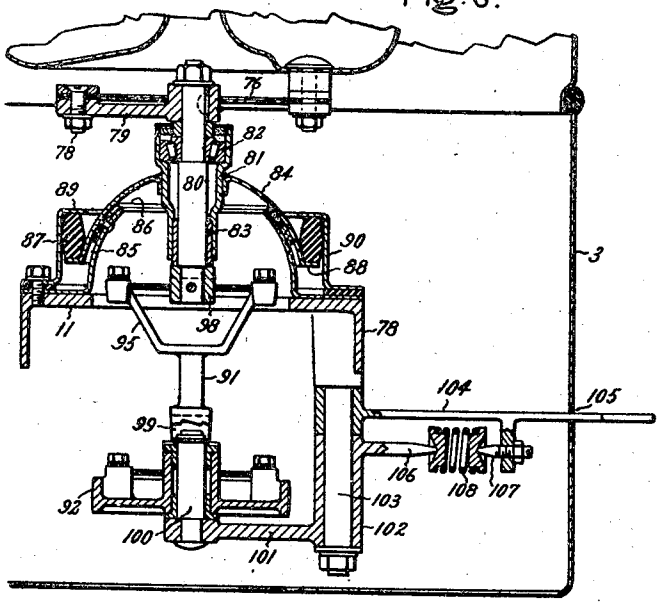

Fig. 9.

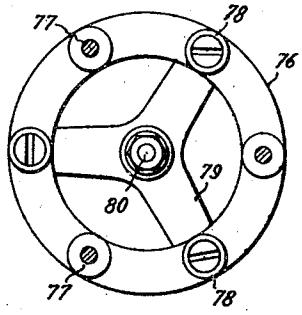

Fig. 10.

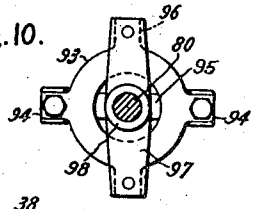

Fig. 7.

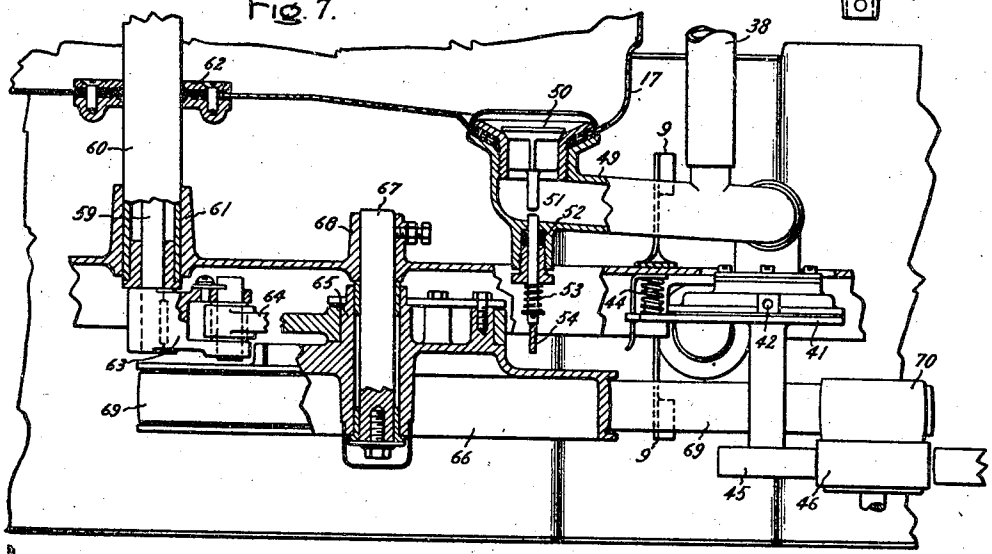

Fig. 8

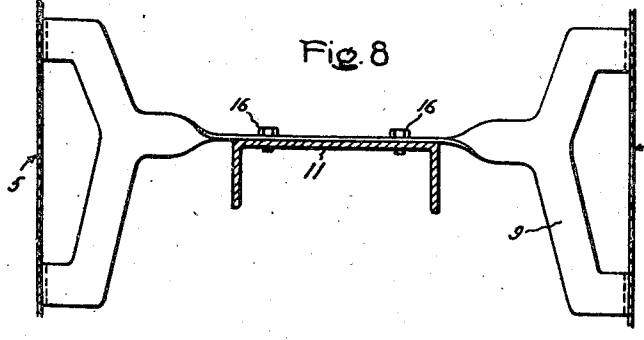

Fig. 11.

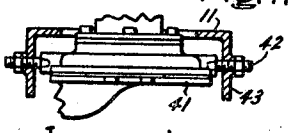

Inventor:
George W. Dunham,
by Harry E. Dunham
His Attorney.

Patented May 27, 1947

2,421,251

UNITED STATES PATENT OFFICE

2,421,251

SUPPORTING MEANS FOR VERTICAL AXIS WASHING MACHINE SPINNER BASKETS

George W. Dunham, Westport, Conn., assignor to General Electric Company, a corporation of New York

Application April 9, 1943, Serial No. 482,417

2 Claims. (Cl. 210—71)

1

The present invention relates to washing machines of the type having adjacent washing and spinning compartments in which clothes are respectively washed and centrifugally dried.

The object of my invention is to provide an improved construction and arrangement in washing machines of this type, and for a consideration of what I believe novel and my invention, attention is directed to the following description and the claims appended thereto. The tub structure disclosed is not claimed herein, it forming the subject matter of my divisional application, Serial No. 592,105, filed May 5, 1945.

In the accompanying drawings, Fig. 1 is a perspective view of a washing machine embodying my invention; Fig. 2 is a perspective view of the supporting skirt; Fig. 3 is an exploded view of the upper end of the spinning compartment; Fig. 4 is a sectional top plan view; Fig. 5 is a sectional elevation; Fig. 6 is a section taken on line 6—6; Fig. 7 is an enlarged sectional elevation of the agitator drive; Fig. 8 is a detail of the skirt reenforcement; Fig. 9 is a plan of the universal connection to the spinner basket; Fig. 10 is a plan of the universal connection to the spinner drive shaft; and Fig. 11 is a detail of the pump support.

Referring to the drawings, there is shown a washing machine having adjacent washing and spinning compartments 1 and 2 carried on a skirt 3 to which are affixed supporting legs 4. As shown in Fig. 2, the skirt is fabricated from two symmetrical pieces 5 each of which has semi-cylindrical sections 6 and 7 joined at opposite ends by welds 8 and connected at the center by a reenforcing member 9 (Fig. 8. This design permits the making of the skirt from sheet stock and eliminates the large and expensive forming dies heretofore in general use. The skirt sections 5 have integral tabs 8a which close the space between the skirt and the lower ends of the washing and spinning compartments.

Extending across and fixed at its ends to the skirt is a T-shaped frame comprising sections 10 and 11. Opposite ends of section 10 have arcuate flanges 12 bolted to reenforcing pads 13 fixed to the skirt. One end of the section 11 is bolted to the center of the section 10 (Fig. 5) and the other end is provided with an arcuate flange 14 bolted to a reenforcing pad 15. The section 11 extends beneath the reenforcing member 9 and is bolted thereto at 16 as shown in Fig. 8. The points of attachment of the frame to the skirt are beneath the legs 4 so the weight of the mechanism carried by the frame is transmitted directly to the legs.

2

The washing compartment 1 consists of a tub having a reduced portion 17 at the lower end telescoped within the part of the skirt formed by semi-cylindrical sections 6 and having a shoulder 18 seated on a rubber bead 19 on the upper edge of the skirt. The spinning compartment 2 consists of a cylindrical shell 20 having a stiffening flange 21 telescoped within the part of the skirt formed by semi-cylindrical sections 7 and having a shoulder 22 resting on a rubber bead 23 on the upper edge of the skirt. The tub and the shell are preferably tightly wedged into the upper end of the skirt to stiffen the same so the skirt may be made of lighter gage metal. On the side adjacent the tub, the shell 20 has a projecting portion 24 the arcuate end wall 25 of which is presented toward and conforms to the side wall of the tub. In the upper end of the shell is an annular trough having an outer section 26 provided with a projecting portion 27 which nests within the projecting portion 24 of the shell 20 and having cylindrical inner section 28 which closely fits within an upstanding wall 29 at the inner edge of the outer section 26. The wall 29 is above the normal liquid level in the trough so the section 28 serves primarily as a splash guard. The bottom of the trough slopes toward an opening 30 at its lowermost part formed by a tab 31 struck out of the arcuate end wall of the projecting portion 27 adjacent the bottom wall of the trough. The opening 30 registers with openings 32 and 33 in the tub and in the end wall 25 and with openings 34 and 35 in gaskets 36 and 37 respectively arranged between the tub and the outer surface of the wall 25 and between the inner surface of the wall 25 and the nesting projection 27 of the trough. When the nesting projections 24 and 27 are bolted to the side of the tub, the shell 20 is fixed to the tub so the shell and tub constitute a rigid structural unit, the trough is securely supported in the upper end of the shell, and the registering openings 30, 32, 33, 34, and 35 form a drain from the trough to the tub which is preferably located at the desired liquid level in the tub. The upper end of the trough is enclosed by a cover member 38 seated on the upper edge of the shell 20 and having a flange 39 overlapping and projecting within the upper outer edge of the trough.

An auxiliary drain from the trough is provided by a standpipe 40 which extends up through one corner of the projection 24 and has its upper end slightly above the lowermost part of the open-

ing connecting the trough and the tub. The upper end of the standpipe defines the maximum liquid level in the tub. The lower end of the standpipe is at all times connected to the inlet of a pump 41 pivotally supported between pivot pins 42 (Fig. 11) threaded in flanges 43 on the frame member 11. By means of a spring 44 the pump is urged in a counterclockwise direction (Figs. 5, 7) so as to hold the pump drive pulley 45 against a pulley 46 on the shaft of a motor 47. The pump is continuously driven during the operation of the machine and tends to draw liquid from the trough and pump it through a drain hose 48. The pump inlet is connected to the bottom of the tub through a conduit 49 and a valve 50 controlled by a push rod 51 extending through a packing 52 in the tub end of the conduit 49. The push rod is biased by a spring 53 to the lowered position in which the valve 50 is closed and is raised by a lever 54 pivoted on a bracket 55 (Fig. 4) and extending out through a slot 56 in the skirt 3. The slot 56 has a notch 57 for holding the lever 54 in the lowered position in which the valve 50 is opened connecting the pump to the bottom of the tub.

In the tub is a bladed agitator 58 which is oscillated by a shaft 59 journaled in a tubular post 60 which is fixed in a boss 61 on the frame member 11 and sealed at 62 to the bottom of the tub. Fixed to the lower end of the shaft 59 is a crank arm 63 connected to an eccentric strap 64 on an eccentric 65 integral with a pulley 66. The pulley is journaled on a stub shaft 67 fixed in a boss 68 on the frame member 11 and is driven through a belt 69 by a pulley 70 on the motor shaft. With the above described mechanism the agitator will be continuously oscillated when the motor 47 is running. If desired, some arrangement may be provided whereby the agitator drive may be disconnected from the motor.

In the spinning compartment is a spinner basket 71 having imperforate side walls flaring outward toward the top and terminating in a rim 72 which overlaps the inner wall 28 of the annular trough. Fixed to the top of the rim 72 is an annular flange 73 provided with radial indentations 74 which serve as centrifugal discharge openings. The flange 73 projects radially inward of the side walls of the spinner basket and serves as a guard ring which keeps the clothes within the spinner basket during centrifugal drying. Beneath the trough is a balance ring 75 arranged substantially opposite the center of gravity of the spinner basket and of such proportions that the moment of inertia of the spinner basket about its axis of spin is equal to or greater than the moment of inertia of the spinner basket about a cross axis through its center of gravity.

The spinner basket is driven through a universal connection comprising a spring steel ring 76 (Fig. 9) having alternate points 77 bolted to the bottom wall of the spinner basket and intermediate points 78 bolted to arms 79 of a spider fixed the the upper end of a drive shaft 80. This universal connection to the spinner basket permits tilting of the spinner basket relative to its drive shaft 80 so as to neutralize unbalanced couple resulting from unequal distribution of clothes in the spinner basket. The unbalanced couple is equivalent to equal and opposite weights above and below the center of gravity of the spinner basket. Because the driving connection to the spinner basket is below its center of gravity, it is important that the moment of inertia of the spinner basket about its axis of spin be greater than the moment of inertia about a cross axis through its center of gravity. If the cross axis moment of inertia is greater than the moment of inertia about the axis of spin, the basket is dynamically unstable since it tends to rotate about the axis having the greater moment of inertia.

The spinner drive shaft 80 is journaled in a sleeve 81 by means of a tapered roller thrust bearing 82 and a sleeve bearing 83. Fixed to the sleeve 81 is a semi-spherical stamping 84 which rests on a complementary spherical support 85 carrying friction members 86 which frictionally resist tilting of the sleeve. Tilting of the sleeve from its central position is resiliently resisted by a rubber ring 87 arranged between a flange 88 on the stamping 84 and a flange 89 at the upper end of a cylinder 90. The supporting member 85 and the cylinder 90 are bolted to the upper surface of the frame member 11. The stiffness of the rubber ring 87 is such that the critical speed of the spinner basket is substantially below its normal running speed. In the present construction the critical speed is of the order of 60 to 100 R. P. M., and the running speed is of the order of 1200 R. P. M. Since the rubber ring is relatively weak, the sleeve 83 tends to tilt to a position in which the spinner basket rotates about its center of gravity, thus neutralizing the effect of static unbalance. At speeds above the critical speed there are gyroscopic vibrations, known as precession, which may be either forward or backward as regards the direction of rotation of the spinner basket. These gyroscopic vibrations are damped by the friction between the friction members 86 and the inner surface of the spherical member 84.

The spinner basket is driven through an intermediate shaft 91 having a universal connection at its lower end to a pulley 92 and a similar universal connection at its upper end to the spinner shaft 80. The universal connection to the spinner shaft 80 is illustrated in Fig. 10. It comprises a spring steel ring 93 having diametrically opposed tabs 94 bolted to forked arms 95 at the upper end of the intermediate shaft 91 and having intermediate tabs 96 fixed to the ends of an arm 97 projecting from a hub 98 pinned to the spinner shaft 80. At the lower end of the intermediate shaft 91 is a similar universal joint connected between forked arms 99 and the pulley 92. The universal connection to the lower end of the spinner shaft 80 is at the center of the spherical surfaces 84 and 85 so that the upper end of the intermediate shaft 91 is always at the same point.

The pulley 92 is journaled on a pin 100 fixed in the outer end of an arm 101 integral with a sleeve 102 pivoted on a pin 103 depending from the frame member 11. Also pivoted on the pin 103 is a lever 104 projecting out through a slot 105 in the skirt 3 and having a toggle connection with the sleeve 102 comprising pins 106 and 107 and a compression spring 108. As the lever 104 is moved on opposite sides of the center line of the toggle, the arm 101 is pivoted so as to move the pulley either into engagement with the pulley 46 on the motor shaft or into engagement with an arcuate brake member 109 (Figs. 4 and 5) pivoted on a pin 110 fixed in a boss 111 depending from the frame member 11. With the lever 104 in the position illustrated in Fig. 4, the pulley 92 is in engagement with the brake 109. When the lever 104 is moved to the left, the pulley 92 is moved into engagement with the drive pulley 46. In the driving and braking positions the intermediate

shaft 91 has a slight angularity which is permitted by the universal connections.

In the use of the machine the tub is filled with water to the level of the opening connecting the tub with the annular trough, and the drain hose 48 may be arranged to discharge to a drain. If the drain hose discharges to a drain the upper end of the standpipe 40 determines the maximum water level in the tub. Since the upper end of the standpipe, as shown in Figs. 3 and 4, is slightly out of line with the passage connecting the trough and tub, there is very little tendency for water to be splashed into the standpipe during oscillation of the agitator, and the liquid level in the tub will remain substantially constant during washing. At the conclusion of the washing operation the clothes are removed from the tub and loaded in the spinner basket 71, and the lever 104 is moved from the braking position to the driving position. The liquid in the clothes is centrifugally discharged through the opening 74 into the trough surrounding the upper end of the spinner basket, and the bulk of the liquid caught in the trough drains back into the tub. A small amount of liquid in the trough may drain through the standpipe, but, since the upper end of the standpipe is above the lowermost part of the trough and presents a relatively small opening, it is expected that the bulk of the centrifugally discharged liquid will drain back into the tub. If the clothes are non-uniformly distributed in the spinner basket, the effect of static unbalance will be neutralized by the tilting of the spinner drive shaft 80 permitted by the rubber ring 87, and the effect of dynamic unbalance (unbalanced couple) will be neutralized by the tilting of the spinner basket relative to the upper end of the spinner shaft 80 permitted by the universal connection through the spring steel ring 76. At speeds above the critical speed, gyroscopic vibration or precession will be damped by the friction between the friction members 86 and the spherical surface 84. By this arrangement the harmful vibrations due to unbalanced distribution of clothes in the spinner basket are kept to a minimum. After the clothes have been centrifugally dried, the clothes may be rinsed by spraying clean water into the spinner basket either with the spinner basket stationary or while it is rotating. The spray rinse water will be centrifugally discharged into the trough, and enough of the rinse water to replace that absorbed in the clothes will flow back into the tub through the passage connecting the trough with the tub. The balance of the rinse water will flow through the standpipe 40 to the pump and will be discharged to the drain. At the conclusion of the rinsing operation the tub accordingly will be filled to the proper level with wash water. At the end of the centrifugal drying operation the lever 104 is moved to the braking position illustrated in Fig. 4, and the spinner basket is quickly brought to rest by the brake 109. When the washing is finished, the lever 54 is moved into the notch 57 at the lower end of the slot 56, raising the valve 50 and connecting the bottom of the tub to the pump so that the water in the tub is pumped to the drain.

What I claim as new and desire to secure by Letters Patent of the United States is:

1. In a washing machine, a spinner basket, a drive shaft therefor, means resiliently supporting the drive shaft and spinner basket for gyratory movement, a pulley, an intermediate shaft having universal connections with said pulley and said drive shaft, a driving pulley and a brake on opposite sides of said first pulley, and means for selectively moving said first pulley into engagement with said driving pulley or said brake.

2. In a washing machine, a spinner basket rotatable on a vertical axis and having a diameter less than its depth, a vertical shaft, means yieldingly supporting the spinner basket on said shaft for universal tilting relative to its instantaneous axis of spin, means resiliently supporting said shaft for gyratory movement whereby the instantaneous axis of spin of the basket about the vertical axis passes through the center of mass of the basket, a balance ring fixed to the basket at said center of mass for making the moment of inertia of the basket about a vertical axis greater than the moment of inertia about a horizontal axis through said center of mass, and means connected with the shaft for rotating it about its vertical axis.

GEORGE W. DUNHAM.

REFERENCES CITED

The following references are of record in the file of this patent:

UNITED STATES PATENTS

Number	Name	Date
2,277,923	Morgenstern (1)	Mar. 31, 1942
2,291,088	Morgenstern (2)	July 28, 1942
2,279,878	Suits et al.	Apr. 14, 1942
2,219,177	Dunham	Oct. 22, 1940
1,829,988	Getz	Nov. 3, 1931
1,483,326	Bock	Feb. 12, 1924
2,346,668	Dunham	Apr. 18, 1944
2,346,669	Dunham	Apr. 18, 1944