(No Model.)

M. C. ROESSLE.

SCHOLAR'S COMPANION.

No. 585,595. Patented June 29, 1897.

FIG. 1.

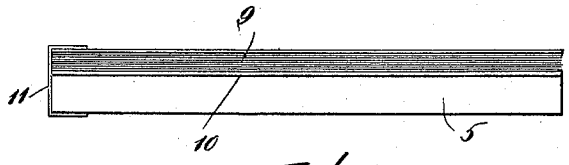

FIG. 2.

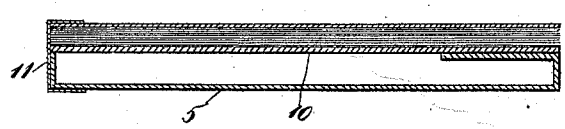

FIG. 3.

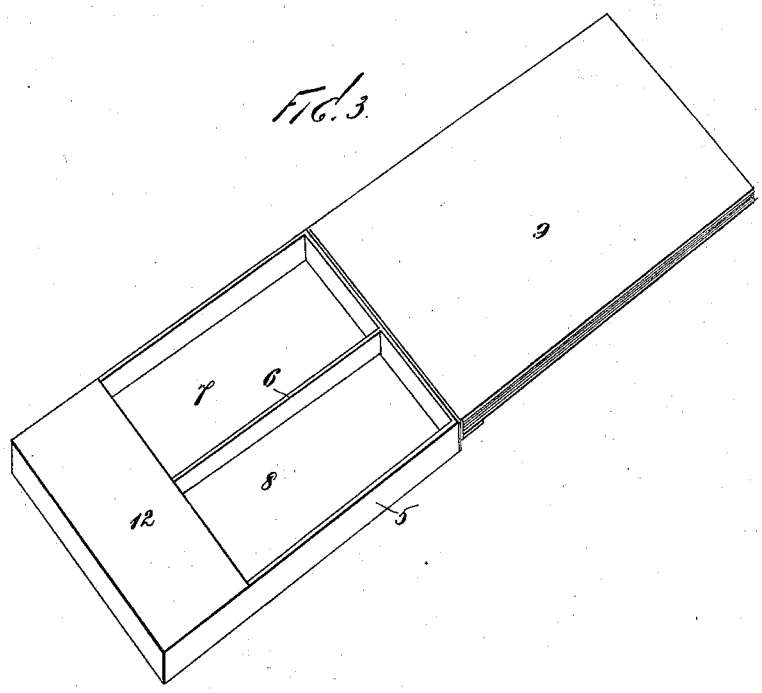

WITNESSES

John Burgkler

C. Gerst

INVENTOR

Marcus C. Roessle

BY

Edgar Tate & Co

ATTORNEYS.

THE NORRIS PETERS CO., PHOTO-LITHO., WASHINGTON, D. C.

UNITED STATES PATENT OFFICE.

MARCUS C. ROESSLE, OF WASHINGTON, DISTRICT OF COLUMBIA.

SCHOLAR'S COMPANION.

SPECIFICATION forming part of Letters Patent No. 585,595, dated June 29, 1897.

Application filed January 27, 1897. Serial No. 620,898. (No model.)

To all whom it may concern:

Be it known that I, MARCUS C. ROESSLE, a citizen of the United States, residing at Washington, in the District of Columbia, have invented certain new and useful Improvements in Scholars' Companions, of which the following is a full and complete specification, such as will enable those skilled in the art to which it appertains to make and use the same.

This invention relates to what are known as "scholars' companions;" and the object thereof is to provide an improved device of this class which consists of a rectangular box or casing provided with separate compartments for receiving pencils, pens, and other articles, and to which is secured at one end by means of a flexible connection a pad of writing-paper which is adapted to serve as a cover for the box or casing.

The invention is fully disclosed in the following specification, of which the accompanying drawings form a part, in which—

Figure 1 is a side view of my improvement; Fig. 2, a central longitudinal section, and Fig. 3 a perspective view with the pad or cover thrown back.

In the drawings forming part of this specification the separate parts of my improvement are designated by the same numerals of reference in each of the views, and in the practice of my invention I provide a rectangular box or casing 5, which is divided longitudinally by a partition 6, whereby two longitudinal compartments 7 and 8 are formed, and I also provide a pad 9 of writing-paper, the separate sheets of which are secured at one end to a heavy sheet 10 of cardboard or similar material, and this pad is secured to one end of the box or casing by means of a flexible strip 11 and is adapted to be turned back, as shown in Fig. 3.

The pad 9 constitutes a cover for the box or casing, and transversely of said box or casing at the end thereof opposite the end to which the pad is secured is a transverse strip or plate 12, which closes the outer end of the compartments 7 and 8.

The paper which constitutes the pad 9 may be of any desired quality or color, and my improvement is adapted for use for scholars or students, and also in offices, houses, and other places wherever articles of this class are required, and said device is also simple in construction and operation and well adapted to accomplish the result for which it is intended.

Having fully described my invention, I claim as new and desire to secure by Letters Patent—

1. The herein-described device which consists of an oblong box or casing to one end of which is hinged or flexibly secured a pad of writing-paper, which is adapted to serve as a cover therefor, said box or cover being provided with a partition whereby a plurality of compartments are formed, and the ends of said compartments opposite the end of the box or casing to which the pad is secured being provided with a partial cover, substantially as shown and described.

2. As an improved article of manufacture, a scholar's companion consisting of a rectangular box or casing divided longitudinally by a partition, whereby two compartments are formed, and a pad composed of writing-paper, the separate sheets of which are secured at one end to a heavy sheet of cardboard, said pad being secured to one end of said box or casing, by a flexible strip whereby a hinged connection is formed, said pad being adapted to serve as a cover for the said box or casing, said box or casing being provided at the end opposite that to which the pad is secured with a transverse strip or plate which is adapted to prevent the escape of any article between the free end of the pad and the box or casing, substantially as and for the purpose described.

In testimony that I claim the foregoing as my invention I have signed my name, in presence of the subscribing witnesses, this 23d day of January, 1897.

MARCUS C. ROESSLE.

Witnesses:

H. T. MURRAY,

E. T. FEARON.