(12) UK Patent Application (19) GB (11) 2 098 569 A

(21) Application No 8117939
(22) Date of filing 11 Jun 1981
(30) Priority data
(31) 8109601
(32) 14 May 1981
(33) France (FR)
(43) Application published 24 Nov 1982
(51) INT CL³ B65D 71/02
(52) Domestic classification B8C BA1
(56) Documents cited
GB 1363780
GB 1332895
US 4235062
US 4206846
US 4204377
US 4136501
GB 3945493
(58) Field of search
B8C
A4X

(71) Applicants
Societe Des Etablissements Thimon,
7 rue Clement Ader,
73100 Aix les Bains,
France
(72) Inventor
Jean-Philippe Begnatborde
(74) Agents
Marks and Clerk,
Scottish Life House,
Bridge Street, Manchester
M3 3DP

(54) **Method for binding a load**

(57) A flexible elastic band is stretched astride the load on at least two vertices of the latter. The band covers the vertices at least partially. The band can be stretchable in its longitudinal or transverse direction. It may be heat-shrunk. Its ends may be welded, wedged or stuck to the load or the band may be endless or perforated (e.g. net-like).

FIG.4

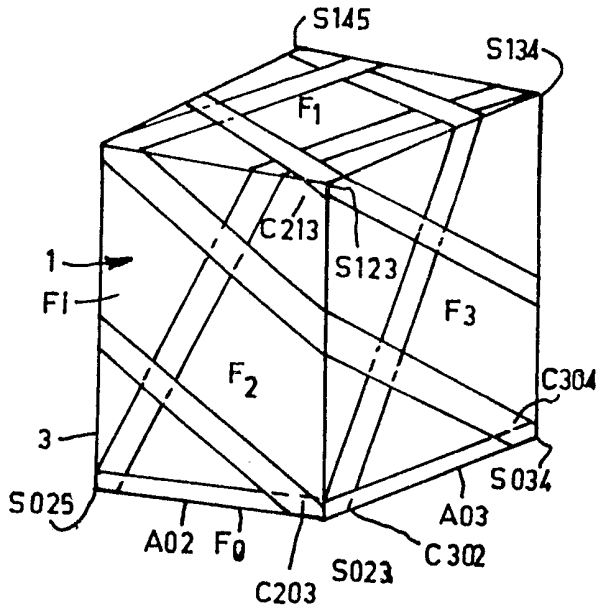

FIG.6

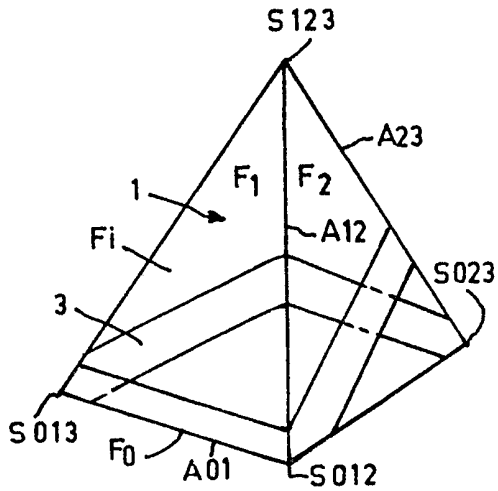

GB 2 098 569 A

The drawings originally filed were informal and the print here reproduced is taken from a later filed formal copy.

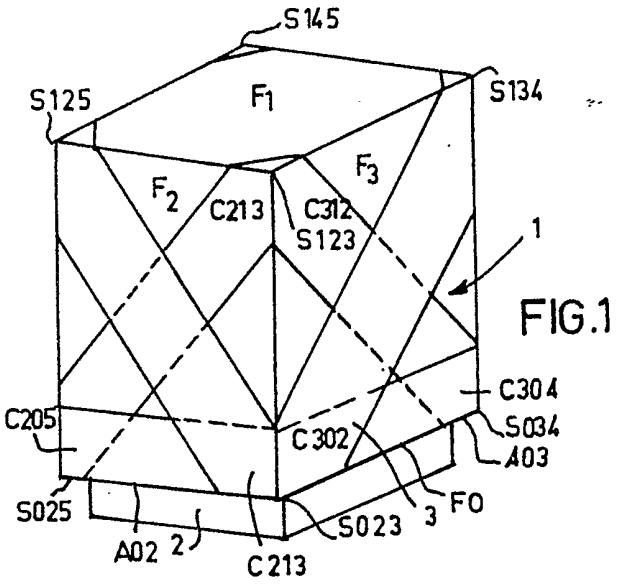

FIG.1

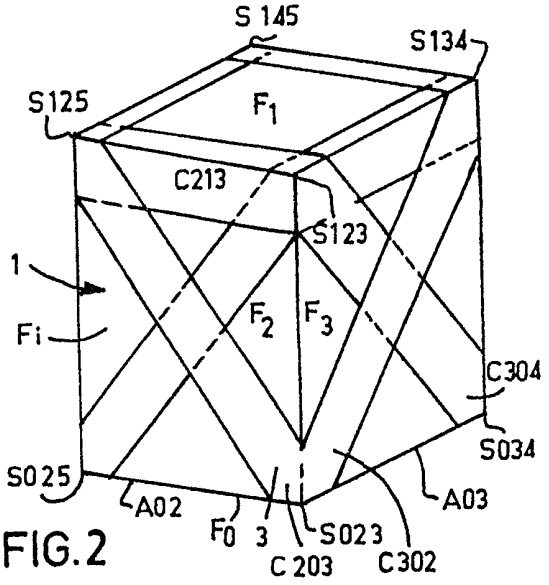

FIG.2

FIG.3

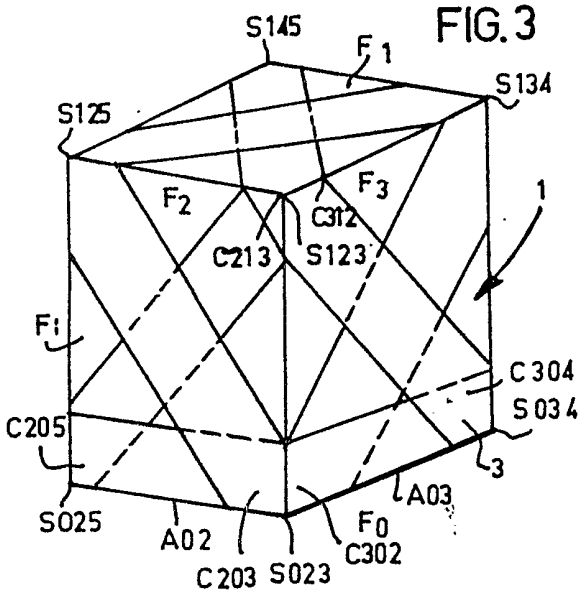

FIG.4

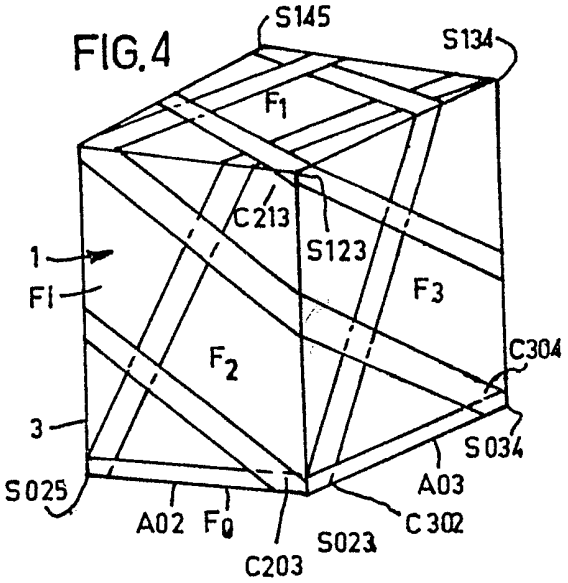

FIG.5

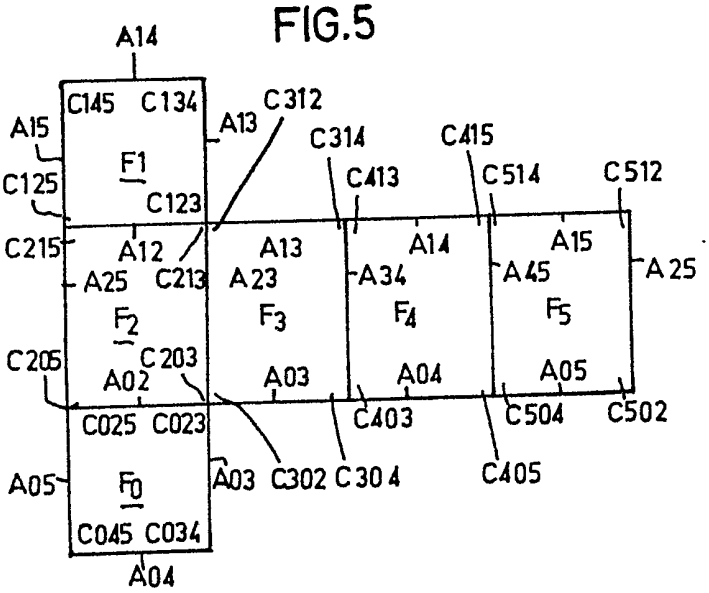

FIG.6

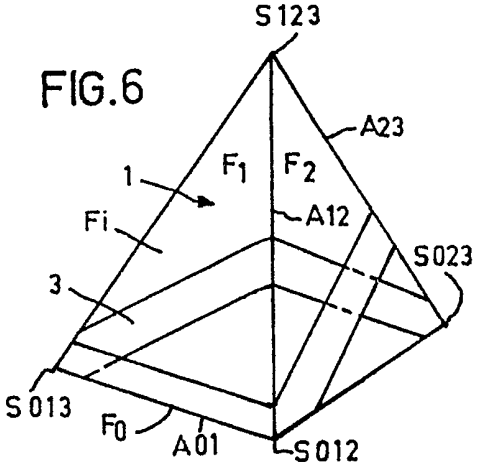

2098569

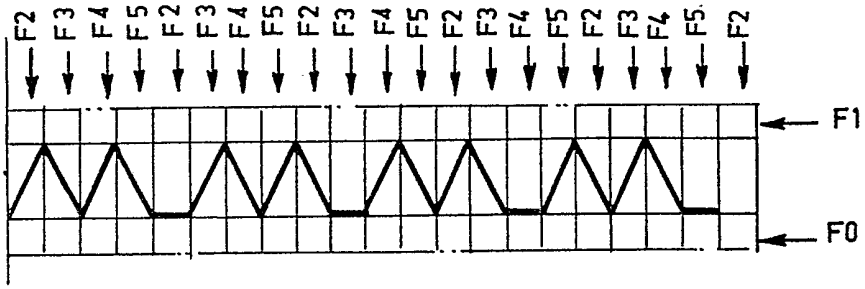

FIG.7A

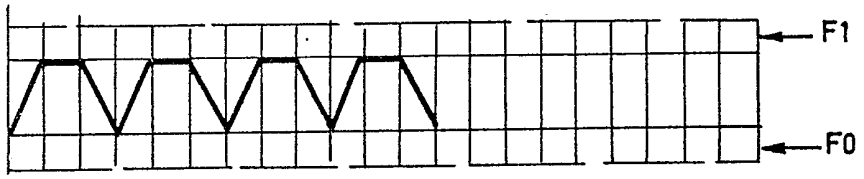

FIG.7B

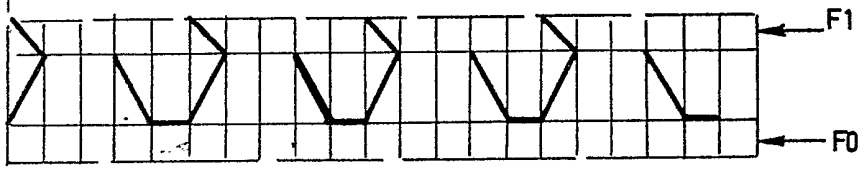

FIG.7C

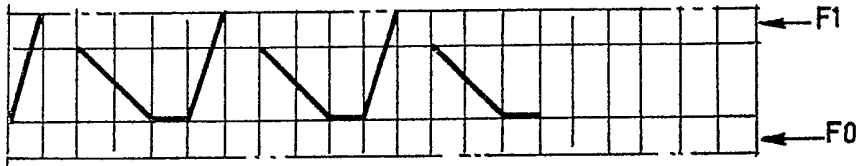

FIG.7D

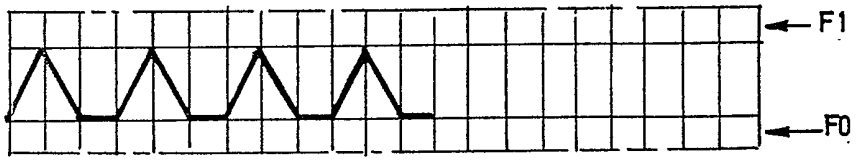

FIG.7E

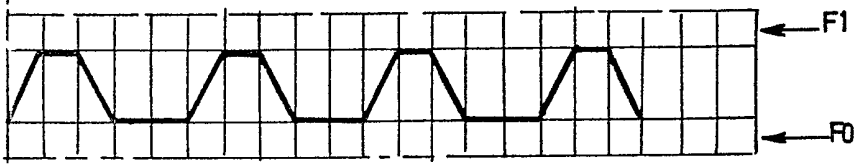

FIG.7F

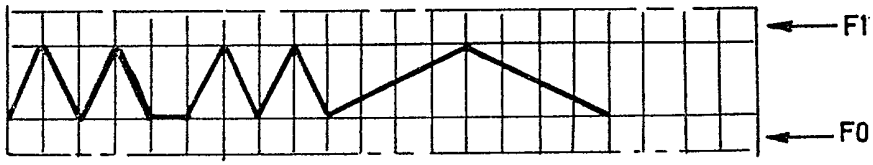

FIG.7G

FIG.7H

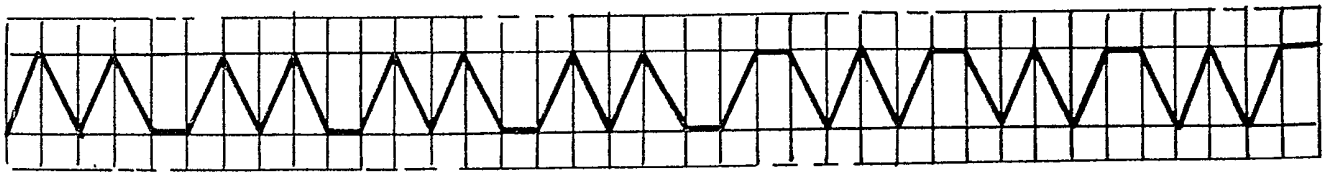

SPECIFICATION

Method for maintaining the cohesion of a load and load resulting from the implementation of the method

The invention relates to a method for maintaining the cohesion of a load and the load resulting from the implementation of the method.

Methods are already known for maintaining the cohesion of a load of the type comprising several vertices, in particular a polyhedral load, either if the load has inadequate intrinsic cohesion or if the load is constituted by an assembly of juxtaposed rigid articles.

In the case of a light load which is not very bulky and is thus able to be moved, in particular lifted, a known method consists of binding the load on its lower, upper and side faces.

In the case of a heavy and bulky load such as loads on pallets, this method cannot be used since it is difficult to handle the load in order to apply a binding member to its lower face, more particularly in its central region. In fact, the lower face of the load constitutes the permanent support surface of the latter, in particular on the pallet. Assuming that a binding member of this type could be positioned, in the central region of the lower face, this would constitute the drawback that this binding member could be damaged in particular at the time of sliding of the load, maintenance of the cohesion thus no longer being ensured.

In another known method, applied to heavy and bulky loads, binding of the load is carried out with a flexible band of plastics material, applied with windings placed edge to edge on the side faces of the load. As a variation, the side faces of the load are covered with a strip of film extending directly over all its faces. These methods have the drawback in that their use is limited to loads of regular and parallelepipedal shape. Furthermore, in this case, the band of film creates cohesion forces in the load which are essentially perpendicular to a single axis, which does not prevent the absence of maintenance of cohesion along this axis. Thus, in the case of a parallelepipedal load, the band is applied to the side faces and creates horizontal cohesion forces for example not preventing the separation of the layers of articles constituting the load one with respect to the other, in the vertical direction.

Finally, a method is known which is also applicable to heavy and bulky loads, in which a rigid retaining member, such as a hoop is placed on the load. However, this method has the drawback of necessitating the presence of means for securing the retaining member on the load itself. Furthermore, this method presupposes a regular shape and constant dimensions for the load.

The invention intends to remedy these drawbacks and to this end it proposes a method of maintaining the cohesion of a load which in particular is heavy and bulky and comprises several vertices, especially a polyhedral load, in particular constituted by the assembly of juxtaposed rigid articles, by means of a flexible band, in which one uses a band having a certain elasticity, the band is placed and stretched astride the load on at least two vertices of the latter, the band being applied to the latter and covering them at least partially, which creates cohesion forces perpendicular to at least two separate axes in the load.

The invention also relates to the load resulting from implementation of the method.

The invention has the advantage of being simple to implement, in particular not requiring access to the central region of the lower support face of the load. This method can be applied to loads of irregular shape, the dimensions of which are variable, of parallelepipedal shape or any other shape. Finally, this method of maintaining cohesion may be combined with a method for packing the load or a method for protecting the latter.

The invention will be better understood by virtue of the ensuring description referring to the accompanying drawings in which:

Figure 1 is a diagrammatic perspective view of a load resulting from the implementation of the method, according to a variation.

Figures 2 to 4 are partial diagrammatic views, illustrating other variations of loads obtained by the implementation of the method according to the invention.

Figure 5 is a diagrammatic view illustrating the load of figures 1 to 4, before implementation of the method, opened out along its faces.

Figure 6 is a diagrammatic partial perspective view of a load obtained by implementation of the method according to the invention, according to another variation.

Figures 7a to 7h are eight diagrams illustrating eight non-limiting variations of sequences for implementing the method according to the invention, the load being shown opened out.

The invention relates to a method for maintaining the cohesion of a load 1, which in particular is heavy and bulky.

The load 1 is defined by a lower face F_0 for supporting the load, in particular on a pallet 2 or the like and at least one outer face F_i, in particular at least three outer faces.

In the method according to the invention, a band 3 is used having a certain elasticity in the longitudinal and/or transverse direction, for example consisting of plastics material. The band 3 is placed and stretched astraddle the load 1 on at least two vertices S_α and S_β of the latter. The band 3 is applied to the vertices S_α and S_β and covers them at least partially. The function of this arrangement is to create in the load 1 cohesion forces perpendicular to at least two separate axes, in particular perpendicular to each other.

According to one possible variation, the band 3 is stretched between at least two vertices S_α and S_β belonging to the same face F_i (figure 1). According to another variation, the band is stretched between two vertices S_α and S_β

belonging to two different faces F_i and F_j, either adjacent or not adjacent each other (figure 4), (figure 6).

According to the invention, the band 3 is stretched between all (figures 1 to 4) or part (figure 6) of the vertices S_λ of the load 1.

According to a possible variation, between two vertices S_α and S_β covered by the band 3, the band 3 is applied to at least one face F_i of the load 1, in particular in its central region (figure 1).

According to another variation, between two vertices S_α and S_β covered by the band 3, the band 3 is placed longitudinally astraddle one edge A_λ of the load 1 and on the edges of the faces F_i, F_j of the load 1 adjacent to this edge (figure 2).

According to a variation, the band 3 is applied to at least one face F_i of the load 1 and the band 3 is stretched between at least two corners C_α and C_γ of this face F_i separated from each other by at least an intermediate corner C_β of this same face. The band 3 is thus stretched along a diagonal of the face F_i (figures 1 and 2).

According to a variation, the band 3 is applied to at least one face F_i of the load and it is stretched between all the pairs of corners of this face, separated from each other by at least one intermediate corner of this same face F_i, thus along all the diagonals of this face F_i which, if necessary, overlap (figures 1 and 2).

According to one variation, the band 2 is applied to at least one face F_i of the load 1 and the band is stretched between at least two edges A_α and A_β of this face F_i. These two edges are either adjacent each other, or not adjacent each other (not shown).

According to one variation, the band 3 is applied to at least one face F_i of the load and the band is stretched between one edge $A_{\lambda'}$ and one corner $C_{\lambda''}$ of this face F_i. Preferably, the corner $C_{\lambda''}$ is opposite the edge $A_{\lambda'}$ (figure 6).

According to one variation, the band 3 is applied to all the outer faces F_i of the load 1. In particular, it is possible to apply the band 3 to all the side faces of the load 1. As a variation, the band 3 is applied to the upper faces of the load 1 also.

In the method according to the invention, the band 3 is not applied to the lower face F_0 supporting the load 1, in particular in its central region. On the other hand, the band 3 may possibly be applied to the corners C_{0ij} of the lower F_0 and in the immediate vicinity of the dges A_{0i} of this face F_0.

On the other hand and by way of a variation, the load 1 is kept permanently supported by its lower face F_0.

In a possible variation, a band is used which can be stretched in the longitudinal and/or transverse direction. In another variation a heat-shrinkable band is used and this band is heated once it has been placed on and around the load in order to ensure its shrinkage.

In a possible variation, a band 3 is used comprising an initial free end part and a final free end part. In this case, the initial free end part of the band 3 is firstly kept at least temporarily firmly connected to the load 1 in particular by sticking, welding, wedging, simple pressure and finally the terminal free end part of the band 3 is firmly connected to the load 1 and/or to another part of the band 3 in particular by sticking, welding, wedging.

In another variation, an endless band 3 is used. A first part of this band 3 is firstly positioned and kept pressed against the load 1 then in succession other parts of this band 3 are positioned and kept pressed against the load 1.

According to one variation, the entire surface of the outer faces F_i is covered with the band 3. This makes it possible to achieve wrapping of the load.

According to another variation, several thicknesses of band 3 are placed at certain desired points, in order to ensure the protection of the load at these points.

According to a variation, the band 3 is applied to all or part of the edges A_λ of the load 1. As a variation, the band 3 is not applied to all or part of the edges A_λ of the load 1, adjacent the lower face F_0 but not comprised in this lower face F_0.

Figures 1 to 4 show a load of general parallelepipedal shape, comprising an upper face F_1 and four side faces F_2, F_3, F_4 and F_5.

In the case of figure 1, once the method has been implemented, the band 3 covers each pair of diagonals of the side faces F_2 to F_5. Furthermore, the band 3 is applied to the edges A_{02}, A_{03}, A_{04} and A_{05}. All the vertices of the load are thus connected. A particular sequence for implementing the method in order to obtain this result is illustrated in figure 7a. The band 3 is applied to the face F_2 between the corner C_{205} and the corner C_{213}, then the band is applied to the face F_3 between the corner C_{312} and the corner C_{304}. Then, the band is applied to the face F_4 between the corner C_{403} and the corner C_{415}. Then, the band is applied to the face F_5 between the corner C_{514} and the corner C_{502}. One is then back at the initial vertex S_{025}. The band is then applied to the edge A_{02} as far as the vertex S_{023} then to the face F_3 from the corner C_{302} to the corner C_{314}. Then, on the face F_4 from the corner C_{413} to the corner C_{405} and so on until returning to the corner S_{023}. The same sequence is pursued.

In the case of figure 2, the band is applied to the face F_2 fro the corner C_{205} to the corner C_{213} then the band is applied to the edge A_{13} as far as the vertex S_{134}. Then, the band is applied to the face F_4 as far as the corner C_{405} then to the face F_5 as far as the corner C_{512}. On reaching the vertex S_{125}, the band is applied to the edge A_{12} as far as the vertex S_{123}. Then the band is applied to the face F_3 as far as the corner C_{304} and so on in the same manner as described previously (figure 7b).

In the case of figure 3, the sequence is that illustrated in figure 7c. The band is applied to the face F_2 between the corner C_{205} and the corner C_{213} then the band is applied to the upper face F_1 between the corner C_{123} and the corner C_{145}. Then the band is applied to the face F_5 between the corner C_{514} and the corner C_{502}. One is then back

at the vertex S_{025}. It is possible to apply the band to the edge A_{02} as far as the vertex S_{023} then to the face F_3 from the vertex C_{302} as far as the vertex C_{314}. Then, the band is once more applied to the face F_1 from the corner C_{134} as far as the corner C_{125}. One thus reaches the vertex S_{125}. The band may then be applied to the face F_2 from the corner C_{215} as far as the corner C_{203}, then to the edge A_{03} between the vertices S_{023} and S_{034}. Then, the band is applied to the face F_4 from the corner C_{403} to the corner C_{415}, which makes it possible to reach the vertex S_{145}, from which the band is applied to the face F_1 from the corner C_{145} to the corner C_{123} thus covering a band already placed at this point, but in the opposite direction. One then continues as already described.

In the case of figure 4, the sequence is illustrated by the diagram 7d. The band is firstly applied between the corner C_{205} of the face F_2 and the corner C_{134} of the face F_1, the band thus being applied to the face F_2 and to the face F_1 by crossing over the edge A_{12}. The band is then stretched between the corner C_{413} of the face F_4 and the corner C_{502} of the face F_5 thus overlapping the edge A_{45}. One is then back at the vertex S_{025}. The band may be applied to the edge A_{02} as far as the vertex S_{023} then one recommences as described previously. As shown in figure 4, this arrangement makes it possible to multiply the areas of application of the band on the side faces and also to distribute the application of the band on the upper face.

The diagram 7e corresponds to a variation of the diagram 7a. Two adjacent faces are covered diagonally, then one edge and so on.

Diagram 7f corresponds to a variation of diagram 7b. After having covered one face diagonally, then one edge, then another face diagonally, two successive edges are covered and so on.

Diagram 7g also corresponds to a variation of diagram 7a which comprises a terminal phase of double binding of the side faces of the load.

Diagram 7h corresponds to a variation of diagram 7a, namely that having completed the process illustrated in diagram 7a, the band is applied diagonally to one side face then along one edge and the process is recommenced, which thus makes it possible to cover not only the edges of the lower face F_0, but also those of the upper face F_1.

In the case of figure 6, the load 1 is in the shape of a pyramid having a triangular base. The load thus comprises one lower face F_0 and three outer faces F_1, F_2, F_3. Assuming the same arrangements as previously, the band is applied between the vertices S_{013} and S_{023}, the band being applied to the face F_1 and to the face F_2 by overlapping the edge A_{12}. Then the band is applied to the edge A_{03} as far as the vertex S_{013}. Then the band is applied to the edge A_{01} as far as the vertex S_{012}. Then, once more, the band is applied between the vertex S_{012} and the vertex S_{013} thus overlapping the edge A_{23}.

As will be understood, the use of an elastic band allows deformation of the latter, in particular at the location of a vertex of the load, whilst ensuring the elastic application of the band to the various corners of this vertex, with a view to creating the afore-mentioned maintaining forces. In the case of a parallelepipedal load, the forces are thus applied along a first axis perpendicular to the face F_0 and along a plane perpendicular to this axis, thus a second axis perpendicular to the first axis.

The invention also relates to a load characterised by the fact that it is obtained by implementing the method which has been described. As already suggested, the corners, possibly the edges adjacent the edges of the lower face F_0 supporting the load 1 are freely accessible in order to facilitate the possible application of the band 3.

The band 3 is either continuous or discontinuous, in particular provided with perforations. For example, the band 3 may be in the form of netting. Possibly, the vertices of the load are placed in these perforations, which effectively retains the band.

CLAIMS

1. Method for maintaining the cohesion of a load comprising several vertices by means of a flexible band, wherein that band is used having a certain elasticity, the band is positioned and stretched astride the load on at least two vertices of the latter, the band being applied to the vertices and covering them at least partially, thereby creating in the load cohesion forces perpendicular to at least two separate axes.

2. A method as claimed in claim 1 wherein the load is a polyhedral load.

3. A method as claimed in claim 1 or 2 wherein the load is constituted by a combination of juxtaposed articles.

4. Method according to any one of claims 1 to 3, wherein the band is stretched between at least two vertices of the load belonging to the same face of the latter.

5. Method according to any one of claims 1 to 4, wherein the band is stretched between at least two vertices of the load belonging to two different faces of the latter, whether or not adjacent.

6. Method according to any one of claims 1 to 5, wherein the band is stretched between all or part of the vertices of the load.

7. Method according to any one of claims 1 to 6, wherein between two vertices covered by the band, the latter is applied to at least one face of the load, in particular in its central region.

8. Method according to any one of claims 1 to 7, wherein between two vertices covered by the band, the latter is applied longitudinally astraddle one edge of the load and to the edge of the faces of the load adjacent this edge.

9. Method according to any one of claims 1 to 8, wherein the band is applied to at least one face of the load and the latter is stretched between at least two corners of this face separated from each other by at least one intermediate corner of this

same face, along a diagonal of this face.

10. Method according to any one of claims 1 to 9, wherein the band is applied to at least one face of the load and the latter is stretched between all the pairs of corners of this face separated from each other by at least one intermediate corner of this same face, along all the diagonals of this face, if necessary overlapping.

11. Method according to any one of claims 1 to 10, wherein the band is applied to at least one face of the load and the latter is stretched between at least two edges of this face.

12. Method according to any one of claims 1 to 11, wherein the band is applied to at least one face of the load and the latter is stretched between one edge and a corner of this face in particular opposite the edge.

13. Method according to any one of claims 1 to 12, wherein the band is applied to all the side or upper faces of the load.

14. Method according to any one of claims 1 to 13, where in the band is not applied to the lower face supporting the load, in particular in its central region, possibly apart from in the immediate vicinity of the edges and corners of this lower face.

15. Method according to any one of claims 1 to 14, wherein the entire surface of the side faces or upper faces is covered with the band.

16. Method according to any one of claims 1 to 15, wherein the band is applied to all or part of the edges of the load.

17. Method according to any one of claims 1 to 16, wherien the band is not applied to all or part of the edges of the load adjacent the lower face.

18. Method according to any one of claims 1 to 17, wherein the load is kept permanently supported by its lower face.

19. Method according to any one of claims 1 to 18, wherein a band is used which can be stretched at least longitudinally.

20. Method according to any one of claims 1 to 19, wherein a heat shrinkable band is used and the band is heated when it has been placed on and around the load.

21. method according to any one of claims 1 to 20, wherein an initial free end part of the band is firstly kept at least temporarily firmly connected to the load, in particular by sticking, welding, wedging, simple pressure and finally a terminal free end part of the band is firmly connected to the load and/or to another part of the band, in particular by sticking, welding, wedging.

22. Method according to any one of claims 1 to 20, wherein an endless band is used, a first part of this band is firstly positioned and kept pressed against the load, then successively other parts of this band are positioned and kept pressed against the load.

23. Load characterised by the fact that it is obtained by implementing the method according to one of claims 1 to 22.

24. Load according to claim 23, wherein the corners, possibly the edges adjacent the edges of its lower support face are freely accessible for possible application of the band.

25. Load according to claim 23 or 24, which rests on a pallet or the like, the bulk of which is less than that of the lower support face.

26. Load according to any one of claims 23 to 25, wherein the band is continuous.

27. Load according to any one of claims 23 to 26, wherein the band is discontinuous, provided with perforations, the vertices of the load possibly being placed in the perforations.

28. Method for maintaining the cohesion of a load substantially as hereinbefore described with reference to the accompanying drawings.

29. A load substantially as hereinbefore described with reference to the accompanying drawings.

Printed for Her Majesty's Stationery Office by the Courier Press, Leamington Spa, 1982. Published by the Patent Office, 25 Southampton Buildings, London, WC2A 1AY, from which copies may be obtained