A. F. DIXON & B. F. MERRITT.

SPRING MOTOR

APPLICATION FILED AUG. 25, 1913.

**1,158,991.** Patented Nov. 2, 1915.

Fig. 1.

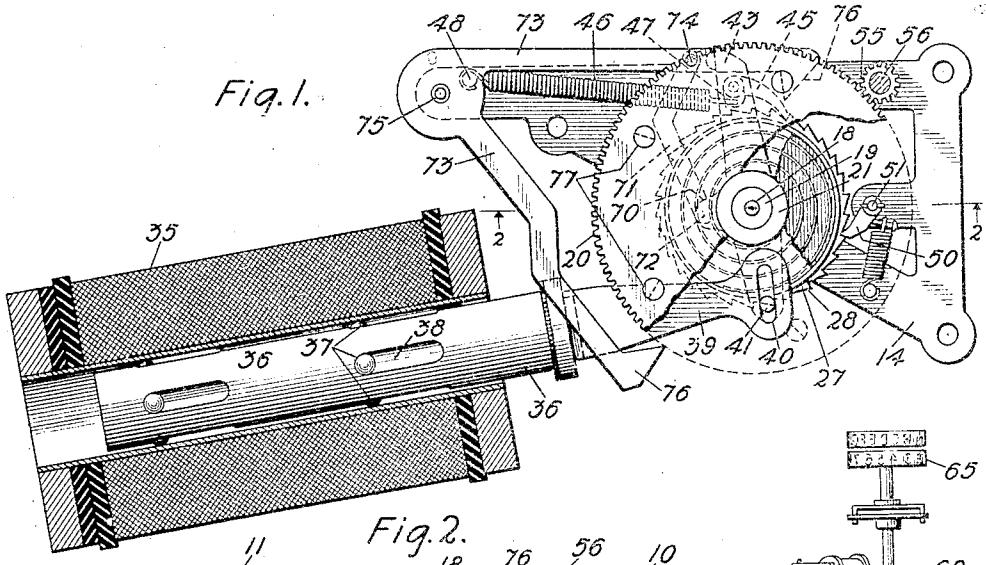

Fig. 2.

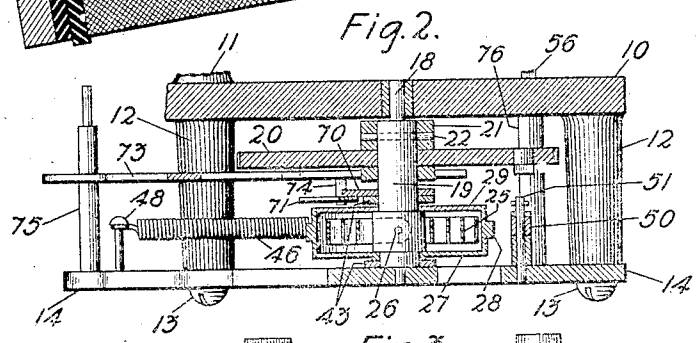

Fig. 3.

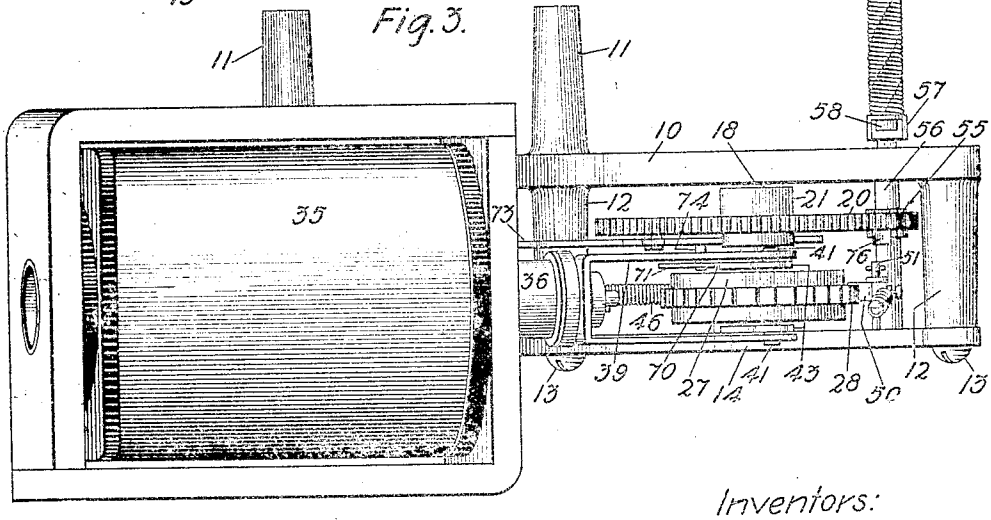

Witnesses:

R. O. Hinkle.

C. D. Hoffman

Inventors:

Amos F. Dixon.

Benjamin F. Merritt.

by D. C. Sanner. Att'y.

# UNITED STATES PATENT OFFICE.

AMOS F. DIXON, OF NEWARK, AND BENJAMIN F. MERRITT, OF EAST ORANGE, NEW JERSEY, ASSIGNORS TO WESTERN ELECTRIC COMPANY, OF NEW YORK, N. Y., A CORPORATION OF ILLINOIS.

## SPRING-MOTOR.

1,158,991. Specification of Letters Patent. Patented Nov. 2, 1915.

Application filed August 25, 1913. Serial No. 786,521.

*To all whom it may concern:*

Be it known that we, AMOS F. DIXON and BENJAMIN F. MERRITT, citizens of the United States, residing at Newark and East Orange, respectively, in the county of Essex and State of New Jersey, have invented certain new and useful Improvements in Spring-Motors, of which the following is a full, clear, concise, and exact description.

This invention relates to spring motors and is particularly adapted for use where a motor for supplying intermittent power is required.

The principal object of this invention is to provide an improved electrically operated motor of the above class, together with an automatic regulating mechanism which is both simple and reliable. To this end, a power mechanism whereby energy is stored in a resilient member, and a tension regulating device controlled by the power mechanism are provided.

The above and other objects of this invention will be fully set forth in the following description and claims and will be more readily understood by reference to the accompanying drawing in which,—

Figure 1 is a plan partly in section of the winding and regulating mechanism; Fig. 2 is a section of the motor and regulating mechanism taken on the line 2—2 of Fig. 1, and Fig. 3 is a side elevation of the entire mechanism assembled, showing an adaptation of the invention employed in connection with the type wheel of a printing telegraph receiver.

In its preferred form the entire motor mechanism is combined into a single detachable unit mounted upon a frame-member 10. The frame member 10 is provided with pedestals 11 by means of which it may be secured in any desirable manner to the mechanism with which the motor is to be associated. The frame 10 is likewise provided with pedestals 12 which, with the assistance of screws 13, serve to hold a supporting plate 14 at a fixed distance from the frame 10. The frame 10 and the plate 14 serve as bearings for the necessary shafts of the mechanism to be hereinafter described.

A main shaft 18 having an enlarged cylindrical portion 19 and bearings in the frame 10 and the plate 14 carries the resilient member and the main driving wheel. A main driving gear wheel 20 having a collar or hub portion 21 is secured to the enlarged portion 19 of the shaft 18 by means of a pin 22. The cylindrical portion 19 of the shaft 18 likewise has secured thereto one end of a helical driving spring 25 which is fastened to the portion 19 by means of a pin 26. The other end of the spring 25 is free, bearing against the inner surface of a metal drum 27. The drum 27 rides loosely on the cylindrical portion 19 of the shaft 18 and carries on its circumference a ratchet 28. A cover plate 29 fits within the inner edge of the drum 27 and rides loosely on the portion 19, serving to prevent foreign substances from entering the spring containing drum 27.

Power is stored in the driving spring by means of a suitable power member actuating the inclosing drum. An electromagnet 35, preferably of the solenoid type, is provided, suitably mounted in the proper relation to the frame 10, plate 14 and the mechanism carried therebetween. The plunger 36 is adapted to reciprocate within the electromagnet 35, the attraction caused by a flow of current therethrough tending to draw the plunger 36 into the electromagnet 35. A number of balls 37, riding in slots 38 in the plunger 36 and on the inner surface of the electromagnet 35, decrease the friction between the moving elements. The plunger 36 carries a U-shaped connecting rod 39, each branch of which is provided at its outer end with a slot 40. Within the slots 40 rest pins 41 which are carried by two operating arms 43. The arms 43 ride loosely upon the cylindrical portion 19 of the shaft 18. Pivoted between the operating arms 43 at the end opposite the pins 41 is a winding pawl 45 which is adapted to engage the teeth of the ratchet 28 on the circumference of the drum 27. A spring 46 secured at one end to a lateral extension 47 of the pawl 45, and at the other end to the frame, through a pin 48, serves the double purpose of holding the pawl 45 against the teeth of the ratchet 28 and to return the operating arms 43, connecting rod branches 39 and the plunger 36 to normal position at each deënergization of the electromagnet 35. A spring pressed holding pawl 50 carried by a pin 51, secured to the plate 14, and engaging the teeth of the ratchet 28, prevents the backward movement of the drum 27. It is thus apparent that the

energization of the electromagnet 35 will attract the plunger 36 which, through the agency of slots 40 and pins 41, will rotate the operating arms 43 about the shaft 18, advance the pawl 45 to engage teeth on the ratchet 28, and thus rotate the drum 27. The friction between the inner surface of the drum 27 and the free end of the spring 25 will cause the winding of spring 25. The energy thus stored in the spring 25 may be expended in rotating the shaft 18 to cause the rotation of the driving wheel 20. It will be noted also that the fact that the outer end of the spring 25 is free, will prevent overwinding and the consequent breakage of the driving springs.

The power stored up in the main driving spring 25 is communicated through the shaft 18 and the driving wheel 20 to a pinion 55 fixedly carried on a secondary shaft 56. The shaft 56 is provided with a clutch 57, which is secured thereto and furnishes a seat for a shaft 58. At the upper end the shaft 58 supports loosely a clutch 59, which is carried by a shaft extension 60. Clutches 57 and 59 are joined by a spring member 61. The shaft extension 60 carries a type wheel 65 from which the character desired may be printed, and an arm 66 which may be engaged by levers 67, arranged in a circle about the shaft 60 and adapted to be suitably selected and operated to stop the shaft 60 and type wheel 65 in any desired position. The shaft is normally held stationary by a holding pawl 68 engaging the teeth of a ratchet 69, carried by the shaft 60.

From the foregoing description it is apparent that the type wheel 65 may be rotated, when the pawl 68 is withdrawn from the ratchet 69 in any suitable manner and the levers 67 are in the depressed position, by the tension in the helical spring 61 which is wound by the rotation of the pinion 55 and driving wheel 20, caused by the resiliency of the main driving spring 25. Without a governing feature, however, this mechanism is open to the objection that in case the selected lever 67 is sluggish in operation after the pawl 68 has been withdrawn from the ratchet 69, the entire power stored in the spring 61 and the main driving spring 25 may be expended in unnecessarily rotating the shaft 60 and type wheel 65. In the event of this running away, it might require several operations of the magnet 35 to store up sufficient power in the spring 25 to rotate the type wheel, and a number of characters might thereby be lost.

The controlling mechanism comprises an escapement influencing the driving wheel and actuated by the operating member. Secured to one of the actuating arms 43 is an arm 70 loosely carried on the tubular portion 19 of the shaft 18. The arm 70 carries a link 71 pivoted thereto at 72 and adapted to be moved thereby. The link 71 connects the arm 70 with one branch of a double escapement anchor 73, being pivoted thereto at 74. The anchor 73 is pivoted on a post 75 secured to the plate 14 and is provided with a pallet 76 on the ends of each of its branches. The pallets 76 are positioned to be alternately engaged by one of a plurality of pins 77 spaced in a circle about the shaft 18 on one face of the driving wheel 20, during the reciprocation of the plunger 36. One of the pallets 76 of the anchor 73 is, therefore, always in the path of one of the pins 77, and the main spring 25 can be unwound at one time only enough to turn the wheel 20 so that one of the pins 77 thereon engages one of the pallets 76 of the anchor 73.

The invention claimed is:—

1. A spring motor comprising a secondary shaft intermittently released to perform work; and mechanism for rotating said secondary shaft, which consists of a rotatable main shaft, a drum loosely mounted thereon, a main driving spring frictionally uniting said main shaft and drum, an electromagnet, an armature therefor, a series of mechanical connections between said armature and said drum whereby said drum is rotated to tension said main spring, a double armed escapement anchor pivoted independently of said armature and connections, an escapewheel on said main shaft revoluble by said main spring and coöperating with said anchor, a link interconnecting said anchor and said connections whereby said armature produces the movement of said anchor, and gearing interconnecting said main and secondary shafts, whereby when said secondary shaft is released to perform work, the unwinding of said main spring is confined within definite limits.

2. In combination a driven shaft, a driving wheel coöperating with said shaft, a spring secured at one end to said driving wheel, the other end being free, a drum inclosing said spring and bearing against the free end thereof, a power member acting upon said drum to wind said spring, and an escapement coöperating with said power member and said driving wheel to regulate the unwinding of said spring.

In witness whereof, we hereunto subscribe our names this 22nd day of August A. D., 1913.

AMOS F. DIXON.
BENJAMIN F. MERRITT.

Witnesses:
R. O. HINKLE,
W. F. HOFFMAN.