A. KENWORTHY.

STRIP BLOCKING OR WINDING MACHINE.

APPLICATION FILED SEPT. 4, 1917.

1,282,236.

Patented Oct. 22, 1918.

2 SHEETS—SHEET 1.

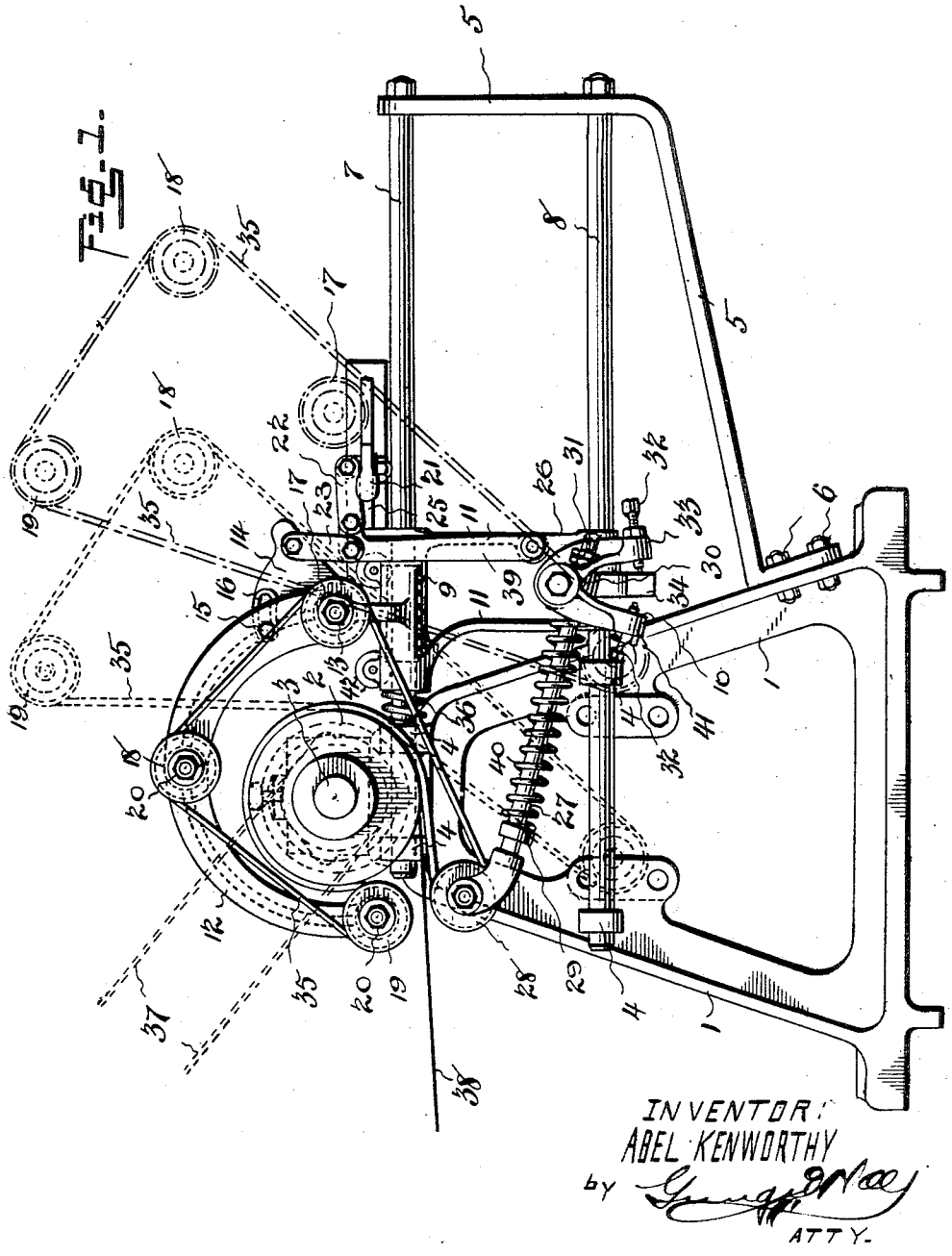

INVENTOR:
ABEL KENWORTHY
by Young & Wood
ATTY.

A. KENWORTHY.

STRIP BLOCKING OR WINDING MACHINE.

APPLICATION FILED SEPT. 4, 1917.

1,282,236. Patented Oct. 22, 1918.

2 SHEETS—SHEET 2.

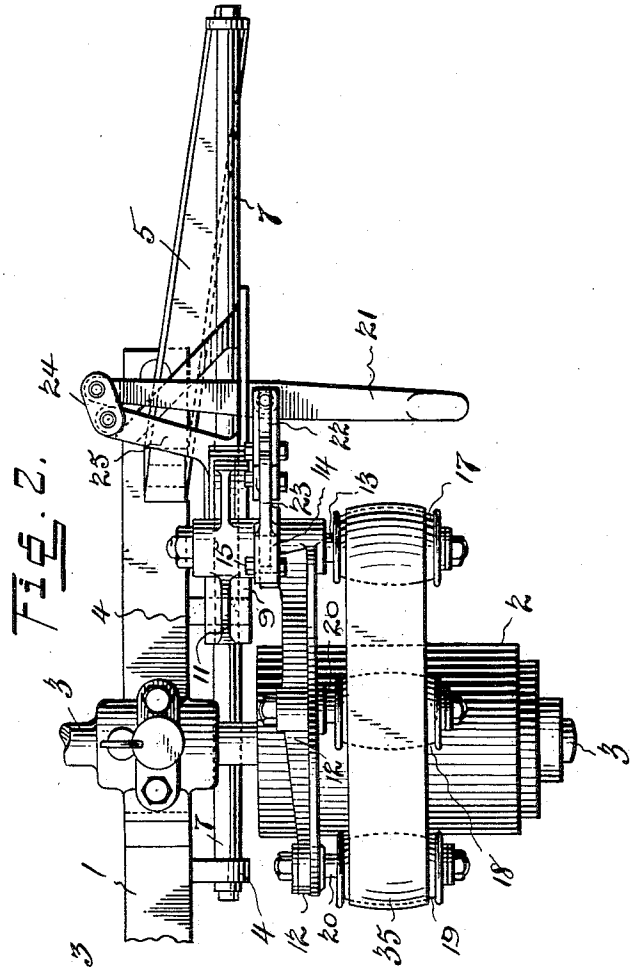

Fig. 2.

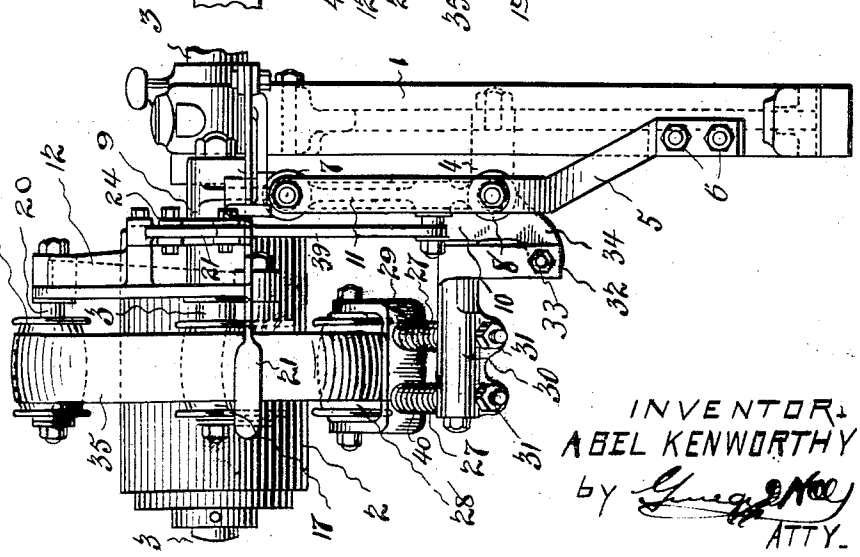

Fig. 3.

INVENTOR.
ABEL KENWORTHY
by [signature]
ATTY.

UNITED STATES PATENT OFFICE.

ABEL KENWORTHY, OF WATERBURY, CONNECTICUT.

STRIP BLOCKING OR WINDING MACHINE.

1,282,236. Specification of Letters Patent. Patented Oct. 22, 1918.

Application filed September 4, 1917. Serial No. 189,486.

To all whom it may concern:

Be it known that I, ABEL KENWORTHY, a citizen of the United States, residing at Waterbury, in the county of New Haven and State of Connecticut, have invented certain new and useful Improvements in Strip Blocking or Winding Machines, of which the following is a specification, reference being had therein to the accompanying drawings.

My invention consists in new and useful improvements in machines or appliances for winding or coiling sheet material, and has for its object, among other things, to produce an efficient and simple device, which can be readily attached to or associated with a strip delivering machine.

The invention may be utilized with advantage on machines for manufacturing or handling sheet metal, card board, oil cloth, wire mesh, floor covering or other material put up in the form of coils or rolls.

The purpose of a device of the class to which the present invention belongs is to mechanically hold the end of the strip of sheet material to be wound against the block and to guide and continually hold the material in close relation around the block or drum during the initial turn or turns thereof, thus obviating the necessity of the operator holding the strip by hand, at great risk of injury to himself and loss of time.

To the above recited, and other ends, the invention consists in the strip or sheet material blocker or winding appliance, hereinafter described, and having certain details of construction and combinations of parts, as will be hereinafter set forth and more particularly pointed out in the claims.

Referring to the drawings, in which like numerals of reference designate like parts in the several figures:

Figure 1 is an elevation of the device, shown in complete form, and having its individual supporting bed and winding drum or block;

Fig. 2 is a plan view of the same; and

Fig. 3 is another elevation looking toward the right of Fig. 1.

In the practice of my invention I am enabled to utilize as a bed or base therefor the frame of the machine to which the device is to be applied, or if the winding apparatus is to be supplied as a self-contained appliance it would be provided with its individual winding block or drum and supporting bed therefor, together with the other novel parts constituting part of the invention herein.

According to the application of the invention as illustrated, the bed or base for the blocking or winding device consists of the frame 1, which supports the block or drum 2 mounted on shaft 3 supported in suitable bearings and rotated by any ordinary means, or the drum may be turned manually if desired.

My improved device is secured to the frame 1 by means of lugs or brackets 4 carried by the frame or by the appliance itself. Additional means for supporting said device consists of the bracket 5 secured by bolts 6 to the frame 1. Substantially parallel bars 7 are rigidly held by said lugs 4 and bracket 5 and the sleeves or blocks 9 and 10 of the device are slidably mounted respectively on said bars 7 and 8. The sleeves 9 and 10 are united by a frame 11 and slide as a unit upon their respective bars 7 and 8.

The sleeve or block 9 pivotally supports an arm 12 on shaft 13 which is provided with bearings carried by said sleeve 9. A segment 14 is mounted on the same shaft and is adjustably connected to the arm 12 by means of the bolt 15 that passes through the slot 16. An idler pulley 17 is rotatably mounted upon shaft 13 and similar rollers 18 and 19 rotate on their respective studs 20 carried by the arm 12. This arm turns on its pivotal support under action of the manually operated lever 21 through a system of connecting links 22 and 23, which links when past the center operate as a locking device to maintain the arm 12 in the lowered position. A link 24 pivotally secures the lever 21 to the bracket 25 carried by the sleeve or block 9. The system of connecting links referred to includes a bell crank intermediate lever 39 which is pivotally connected to bracket 26 carried by the sleeve 10.

The arm or member 27 consists of a pair of rods carrying at the ends a forked head serving as a bearing for the idler pulley 28. Coil springs 40 surround these rods between the collars 29 and the pivotal block 30. The tension of these springs is varied by means of the nuts 31. The angular position of said rod or arm is adjusted by means of the set screw 32, which can be manipulated to vary the relative position between the projection 33 forming part of the block 30 and the lug 34 carried by the sleeve or block 10. A cor-

responding projection 41 having adjusting devices is provided to limit the drop of the arm 27.

Idler rollers 17, 18, 19 and 28 operate as guiding rollers for a belt 35 which passes partially around them and the drum or block 2 when the appliance is in its operative position, the idler 28 serving as a tension device, varying the frictional contact of the belt with the drum 2.

The entire operative parts of the appliance are moved on the bars 7 and 8 into and out of their winding positions and a spring 36 is provided to offer a cushion between the sliding member 9 and the point of its abutment with the base 1, and to minimize friction, anti-friction devices 42 are interposed between the sliding member 9 and the bar 7. The spring 36 also exerts a pressure upon the appliance that increases the tension of the belt 35 against the drum 2.

In the operation of my improved device the winding drum 2 is rotated by any suitable means, for example, the belt 37, and the strip 38 is fed from a delivery machine (not shown). When in use, the operative parts of the appliance are in the full line positions shown in Fig. 1 of the drawings. When the material is coiled around the drum sufficiently to hold itself, the lever 21 is operated, and through the connecting links and segment 14, the arm 12 is lifted so that the belt and roller will be in the dotted line position shown. Finally when the diameter of the drum increases, owing to the winding of material thereon, the appliance is pushed bodily along bars until the belt and rollers are in the broken line position shown, or if desired, the parts can be moved beyond that point, up to the bracket 5.

There are minor changes and alterations that can be made within my invention, aside from those herein suggested, and I would therefore have it understood that I do not limit myself to the exact construction herein shown and described, but claim all that falls fairly within the spirit and scope of the appended claims.

Having described my invention, what I claim as new and desire to secure by Letters Patent, is:

1. In a machine or device of the character described; a winding drum mounted on a bed; a sliding member traveling on a base secured to said bed; an arm pivotally connected to said sliding member; a plurality of guide rollers carried by said arm; a belt passing around said guide rollers; an operating lever for said arm; and a system of links operatively connecting said lever to said arm and maintaining the latter in predetermined positions relatively to said winding drum.

2. In a machine or device of the character described; a rotary drum mounted on a frame; a bar rigidly secured to said frame; a sliding member mounted on said bar; an arm carrying a plurality of guide rollers; an endless belt partially surrounding said drum when said arm is in an operative position; an operating lever for said arm pivotally connected to said sliding member; and a system of links connecting said lever to said arm.

3. In a machine or device of the character described; a rotary drum mounted on a frame; a bar or base member rigidly secured to said frame; a sleeve or sliding block mounted on said bar; an arm carrying a series of guide rollers for an endless belt; and means comprising a horizontally disposed operating lever connected by a series of horizontal and vertical links for moving and maintaining said pivoted arm into an operative or inoperative position relatively to said drum.

4. In a machine or device of the character described; a rotary drum mounted on a frame; a pair of substantially parallel bars constituting a base rigidly secured to said frame; a sleeve or block mounted on each of said bars and united together to form a sliding frame; a pivoted arm carried by said frame; a series of guide rollers on said arm; an endless belt guided by said rollers; and means comprising an operating lever, connecting links and a segment adjustably united to said arm, for setting and maintaining said arm in varied positions relatively to its support and said rotary drum.

5. In a machine or device of the character described; a rotary drum; a support therefor; a sliding member mounted on a fixed base; an arm pivotally connected to said sliding member; a lever and connecting links for operating said arm; a series of guide rollers on said arm; an endless belt guided by said rollers; and a tension device for said belt, comprising a spring arm pivotally mounted on said sliding member and having a belt guiding roller at the free end and a projection at each side of the pivotal point alternately engaging a stop device whereby the upward and downward movement of said spring arm is limited.

6. The combination with a machine having a rotary winding drum and a supporting frame therefor; of an appliance for effecting the initial winding of a strip of material around said drum, said appliance comprising a pair of substantially parallel bars rigidly secured to said supporting frame and providing a stationary base for the operative parts of the appliance movably mounted thereon, said operating parts comprising a curved arm disposed eccentrically to said drum and pivoted at a point substantially in the same horizontal plane as

the bearing for said drum; and a lever link connected to said arm at a point adjacent to its pivot for operating said arm.

7. In an appliance of the character described, the combination with a winding block; of a pivoted arm carrying a series of studs providing bearing for a series of guide rollers; an endless belt guided by said rollers; and means, comprising a lever connected by a series of links to said arm for changing the position of said arm relatively to said winding block.

8. In an appliance of the character described; a sliding member supported between and having a sliding bearing on a pair of bars constituting a stationary base for said sliding member; means whereby said member may be moved relatively to its support; an arm pivotally connected to said sliding member; and means, comprising an adjustaing segment, for varying the position of said arm relatively to said sliding member.

9. In an appliance of the character described; a winding drum; a bed therefor; a member slidably mounted on a stationary base mounted on said bed; an arm pivotally connected at the inner end to said member; a guide roller carried at the end of each arm in substantially the same horizontal plane as the bearing of said winding drum; an intermediate guide roller mounted on said arm; an endless belt guided by said rollers around said drum; an adjustable segment mounted on the pivot of said arm and connected to the latter member; and a lever link connected to said segment for operating said arm.

10. In combination with a rotary drum; a device for effecting the initial winding of a strip of material on said drum, which device comprises an endless belt when in operation passing partly around said drum; a series of guide rollers for said belt; a semicircular pivoted arm providing bearings at diametrically opposite points for said rollers, one of said bearings being the pivot of said arm; a sliding member to which said pivoted arm is connected; and means, comprising a lever and a system of connecting links for varying the position of said arm relatively to said drum.

11. In an appliance or device of the character described; a winding drum; a base therefor; a sliding member mounted on said base; a single arm pivotally mounted on said sliding member; studs projecting at right angles from said arm; guide rollers mounted an said studs; an endless belt guided by said rollers around said winding drum when said arm is in its operative position; and means, comprising an operating lever and connecting links for varying the position of said arm and maintaining same in operative and inoperative positions.

12. In an appliance or device of the character described; a winding drum; a base therefor; parallel bars secured to and projecting from said base; a frame capable of sliding on said bars; a coil spring cushioning the movement of said frame against said base; a pivoted arm mounted on said frame; means, comprising a lever and links for sliding said frame and lifting said arm; and a segment interposed between said means and said arm for adjusting the position of said arm relatively to said frame.

13. In an appliance or device of the character described; a winding drum or block; an endless belt effecting initial winding of a strip of material on said drum or block; a series of guide rollers for guiding said belt; a tension device for increasing the frictional contact of said belt around said drum, said tension device comprising a pivoted spring arm carrying a roller at the free end and a plurality of stop devices adjacent to the pivoted end of said arm acting alternately to limit the upward and downward movement of said arm.

In testimony whereof I have hereunto affixed my signature.

ABEL KENWORTHY.