May 30, 1933. J. M. KEY 1,912,278

BOTTLE FILLER

Filed Feb. 10, 1932

Fig. 1.

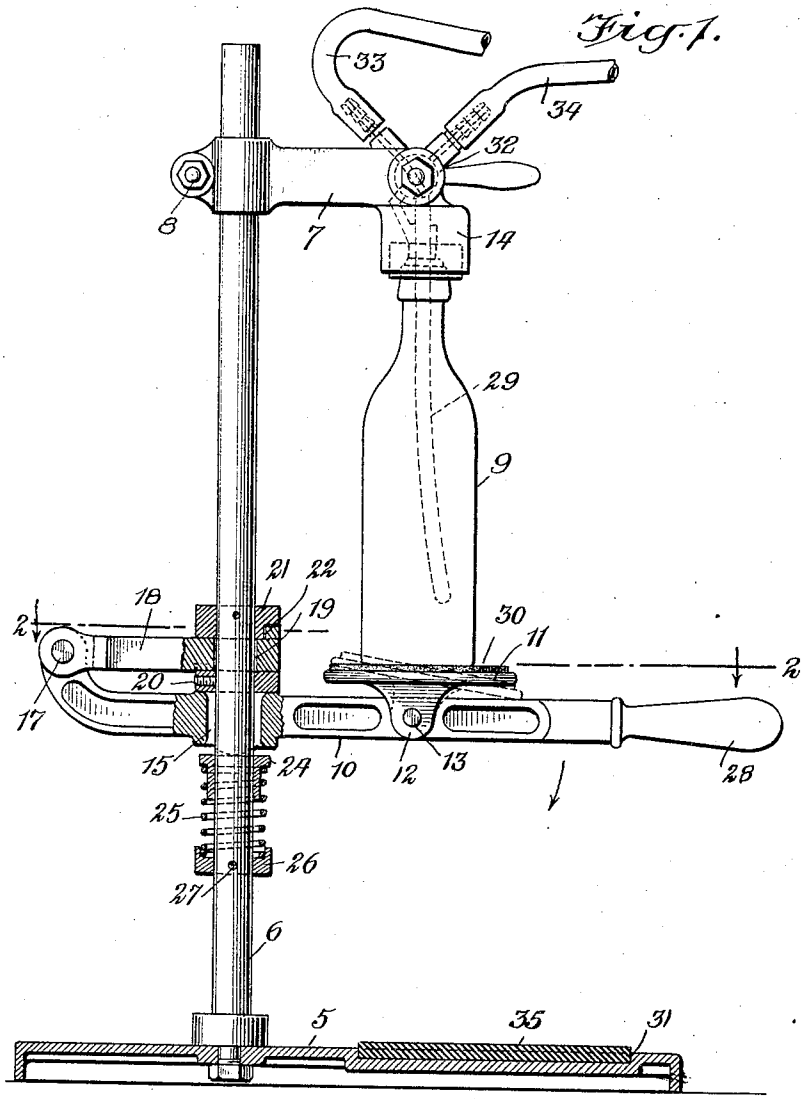

Fig. 2.

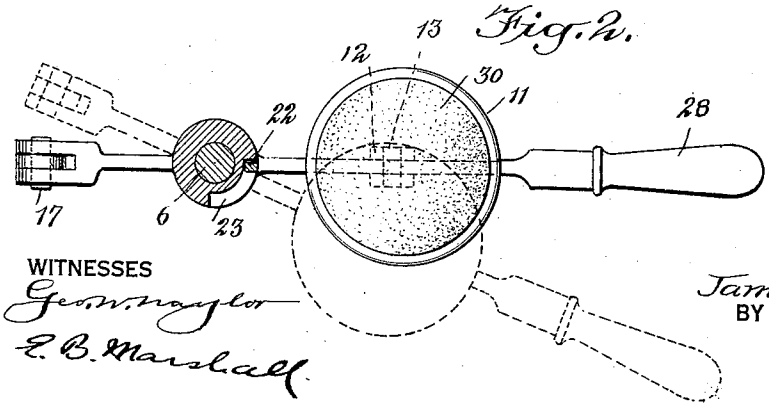

WITNESSES

Geo. W. Naylor

E. B. Marshall

INVENTOR

James M. Key

BY Munn & Co.

ATTORNEYS

Patented May 30, 1933 1,912,278

UNITED STATES PATENT OFFICE

JAMES M. KEY, OF NEW YORK, N. Y., ASSIGNOR OF ONE-HALF TO JOHN F. HUNT, OF NEWARK, NEW JERSEY

BOTTLE FILLER

Application filed February 10, 1932. Serial No. 592,142.

An object of the invention is to provide a bottle filler with which bottles may be quickly and conveniently filled.

Another object of the invention is to provide a bottle filler which may be used to fill bottles of different sizes, and particularly bottles of different heights.

Still another object of the invention is to provide a bottle filler with an adjustable support for the bottles, which serves to keep the bottles in normal position and prevent breakage.

A further object of the invention is to provide a lever for the adjustable bottle support which has means for holding the lever yieldingly in normal position and which permits the adjustable bottle support to be moved downwardly and laterally from under a bottle.

Additional objects of the invention will appear in the following specification in which the preferred form of the invention is described.

In the drawing similar reference characters refer to similar parts in both views, of which

Figure 1 is a vertical sectional view illustrating the invention, and

Figure 2 is a sectional view on the line 2—2 of Figure 1.

By referring to the drawing it will be seen that a base 5 is provided from which extends upwardly a standard 6, the standard 6 being secured to the base 5 in a suitable manner. Mounted on the standard 6 there is a bottle filling head 7 which is preferably secured to the standard 6 by adjustable means 8, the bottle filling head 7 being of conventional construction and not being part of the invention. This bottle filling head 7 has an outlet tube 29 which may be disposed within the bottle 9, as illustrated in Figure 1 of the drawing.

My invention relates to the lever or supporting bar 10, sometimes designated in the trade as a stirrup, and the bottle support 11, and the other parts associated therewith which will now be described. The bottle support 11 is disposed above the lever 10 and has depending flanges 12 spaced apart, one at each side of the lever 10, depending flanges 12 being secured to the lever 10 by a pivot pin 13 which provides a pivotal connection between the bottle support 11 and the lever 10. It will be seen by referring to Figure 1 that the center of gravity of the bottle support 11 is at the outer side of the pin 13, so that when a bottle is not held down against the bottle support 11 by means of the cap 14 of the bottle filling head 7, the bottle support 11 will assume the position illustrated by the dotted lines in Figure 1.

The lever 10 has an opening 15 through which the standard 6 is disposed, and the said lever 10 beyond the opening 15 is pivoted at 16 to a bearing member 18, the bearing member 18 having an aperture 19 through which the standard is disposed and being held against vertical movement on the standard 6 by a collar 20 disposed below the bearing member 18 and a collar 21 disposed above the said bearing member 18. These collars 20 and 21 are held relatively to the standard 6 by pins or screws disposed in apertures in the collars 20 and 21 and which engage the standard 6, as will be seen by referring to the drawing.

It will be understood that the bearing member 18 may rotate on the standard 6 and this rotary movement of the bearing member 18 on the standard 6 is limited by the boss 22 which extends upwardly from the bearing member 18 and which is disposed in an arcuate groove 23 in the collar 21.

Disposed below the lever 10 there is a collar 24 which is pressed upwardly against the underside of the lever 10 by means of a spring 25, the spring 25 being supported by a collar 26 which is held in place on the standard 6 by a pin 27.

From the description of the invention, it will be understood that the lever 10 by means of its handle 28 may be moved downwardly and may be rotated relatively to the standard 6, so that a bottle 9 may be disposed against the cap 14 with the outlet tube 29 disposed in the bottle, when the lever 10 may be rotated to position the bottle support 11 under the bottle 9, when the downward pressure against the handle 28 having been removed, the spring 25 will serve to press the lever 10 upwardly, together with the bottle support,

against the underside of the bottle 9 and hold the bottle 9 in operative position relatively to the filling cap 14. The bottle support 11 is provided with a cushion 30 which will press against the underside of the bottle 9 and the bottle 9 will be held between this cushion 30 and the filling cap 14, which is provided in the customary manner with a gasket or cushion for engaging the top of the bottle. The base 5 has a recess 31 in which a pad or cushion 35 is disposed, so that, when the bottle has been filled in the customary manner by the introduction of carbonic acid gas, or other gas, through the filling tube 29 by the operation of the valve 32, and subsequently by means of the valve 32 introducing a liquid, or a liquid and a gas, in the bottle, the valve 32 being of the customary type to introduce carbonic acid gas from one of the pipes 33 or 34 and a liquid and gas from the other pipe 33 or 34, the lever 10 may be moved downwardly and laterally and the bottle 9 may be moved down on the cushion 35.

When the bottle is disposed in the position indicated in Figure 1 of the drawing, the lever 10 with the bottle support 11 may be rotated on the standard and, when the handle 28 is freed, the spring 25 will press the lever, together with the bottle support, upwardly. It will be understood that the movement is such that bottles of various heights may be disposed between the cushion 30 and the filling cap 14 on the bottle support. It will also be understood that the bottle support 11 is self-adjusting to keep the bottle level, while the lever is moved downwardly or upwardly on its pivot 17, which prevents breakage.

What is claimed is:

1. In a bottle filler, a filling cap, a lever, and a bottle support disposed above the lever and pivoted thereto with the center of gravity of the bottle support at one side of the pivot to dispose the bottle support with one side extending downwardly against the lever when a bottle is not held upwardly against the filling cap by the bottle support.

2. In a bottle filler, a filling cap, a lever mounted for vertical and lateral movement, a bottle support disposed above the lever and pivoted thereto with the center of gravity of the bottle support at one side of the pivot to dispose the bottle support with one side extending downwardly against the lever when a bottle is not held upwardly against the filling cap by the bottle support, and means to move the lever vertically and laterally and to support the lever at all times.

3. In a bottle filler, a standard, a filling cap mounted on the standard, a lever rotatably mounted on the standard and movable vertically relatively thereto, resilient means for holding the lever upwardly in normal position, and a bottle support disposed above the lever and pivoted thereto with the center of gravity of the bottle support at one side of the pivot.

4. In a bottle filler, a standard, a filling cap mounted on the standard, a bearing member rotatably mounted on the standard, a lever pivoted to the bearing member and having an opening through which the standard is disposed, resilient means for holding the lever yieldingly upwardly relatively to the standard, and a bottle support mounted on the lever.

5. In a bottle filler, a base, a standard extending upwardly from the base, a filling cap mounted on the standard, a bearing member rotatably mounted on the standard, a lever pivoted to the bearing member and having an opening through which the standard is disposed, resilient means for holding the lever yieldingly upwardly relatively to the standard, and a bottle support mounted on the lever.

6. In a bottle filler, a standard, a bearing member rotatably mounted on the standard, a lever pivoted to the bearing member and having an opening through which the standard is disposed, and a bottle support mounted on the lever.

JAMES M. KEY.