Feb. 24, 1948. G. E. GRAY 2,436,750

ROTARY SELECTOR SWITCH

Filed Aug. 17, 1944

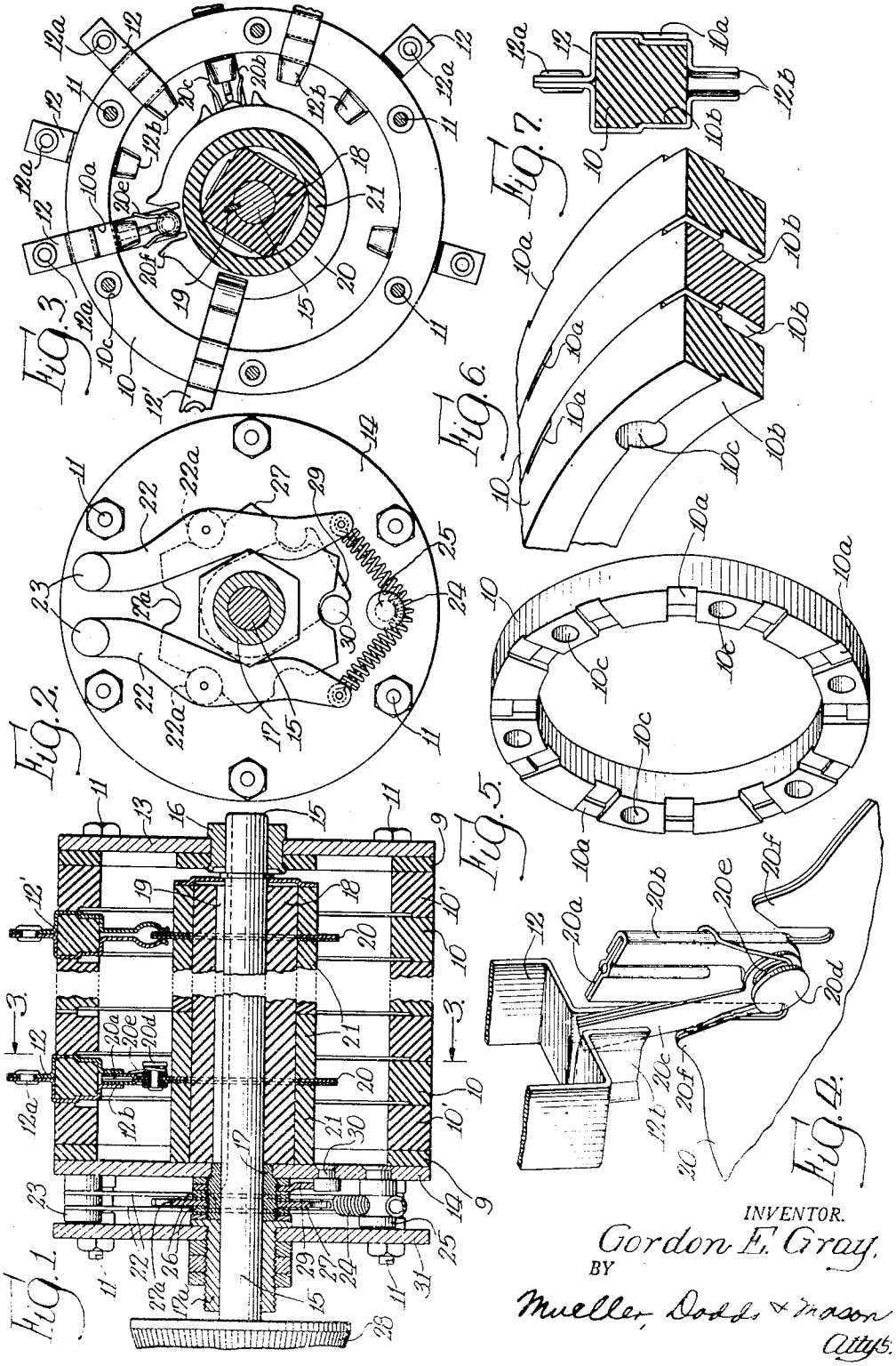

INVENTOR.
Gordon E. Gray.
BY
Mueller, Dodds & Mason
Attys.

Patented Feb. 24, 1948

2,436,750

UNITED STATES PATENT OFFICE

2,436,750

ROTARY SELECTOR SWITCH

Gordon E. Gray, Western Springs, Ill., assignor to Grayhill, Chicago, Ill., a partnership

Application August 17, 1944, Serial No. 549,839

8 Claims. (Cl. 200—11)

1

This invention relates to rotary selector switches and more particularly to such switches of the type suitable for construction with any desired number of poles or decks, each comprising a plurality of angularly spaced primary contact elements and a relatively rotatable secondary contact member in alignment with its respective group of angularly spaced primary contacts.

The prior art rotary selector switches have generally comprised a series of contact carrying disks and surrounding rings or frames carrying the cooperating contacts. Usually the contacts of each cooperating pair comprise one rigid finger and a resilient spring clip. The disks of such a switch structure are usually punched from fiber or plastic insulation material to which the contact elements are fixed, as by riveting. Due to the difficulties in maintaining satisfactory manufacturing tolerances, such a switch construction is generally limited to one of three or four decks or gangs. Furthermore, the contact structure is such that the contact surfaces tend to become burned by arcing as well as scored and galled by the wiping action of the contact elements. This damage to the contacts is aggravated by the open construction of the switch, whereby dust and dirt are deposited on the contacts and aid in the abrasive action.

It is an object of the invention, therefore, to provide a new and improved rotary selector switch which is effective to overcome one or more of the above-mentioned disadvantages of the prior art arrangements.

It is another object of the invention to provide a new and improved rotary selector switch in which the contact elements are completely enclosed by the switch structure itself.

It is a further object of the invention to provide a new and improved rotary selector switch in which the effects of arcing, burning and scoring of the current-carrying contacts are substantially eliminated.

In accordance with the invention, an enclosed rotary selector switch comprises a stack of aligned annular rings of insulation material at least one of the rings being provided with a plurality of angularly spaced, radially extending recesses. A primary contact element is mounted in each of predetermined ones of the recesses and includes a contact portion extending radially inward from the annular ring. The switch also includes a relatively rotatable secondary contact element disposed within the stack in alignment with, and adapted selectively to engage, the contact surfaces of the primary contact elements associated with the ring, whereby the stack of rings provides an enclosing housing for the contact elements.

2

Further in accordance with the invention, in a rotary selector switch including a plurality of angularly spaced primary contact elements and a relatively rotatable secondary contact element, there is provided a snap-action contact structure, for use as one of the primary or secondary contact elements, comprising a support, a main current-carrying member carried by the support, and an auxiliary circuit-breaking contact member mounted in a predetermined normal positional relation to the main member but movable therefrom. The contact structure also includes means for biasing the auxiliary member to the normal relation. The configuration of the main and auxiliary members is such that engagement of the main member with a cooperating contact element of the switch disengages the auxiliary member therefrom.

Further in accordance with the invention, in a rotary selector switch of the type described, there is provided an interchangeable supporting member for the resilient primary contact elements comprising an annular ring of insulation material, the ring being provided on one side with a plurality of angularly spaced, radially extending recesses for receiving the primary contact elements and on the other side with an annular groove extending to its inner periphery, to permit limited movement of the inwardly extending portions of the resilient primary contact elements.

Further in accordance with the invention, in a rotary selector switch of the type described, there is provided an interchangeable stationary contact assembly comprising an annular ring of insulation material provided with a plurality of angularly spaced, radially extending recesses and a primary contact element mounted in each of predetermined ones of the recesses and resiliently engaging the ring. The contacts are positioned and secured to the ring solely by the recesses and their resilient engagement with the ring.

For a better understanding of the invention, together with other and further objects thereof, reference is had to the following description taken in connection with the accompanying drawings, while its scope will be pointed out in the appended claims.

Referring now to the drawings, Fig. 1 is a longitudinal cross-sectional view of a rotary selector switch embodying the invention; Fig. 2 is an end view of the indexing system of the switch of Fig. 1; Fig. 3 is a transeverse cross sectional view of

the switch of Fig. 1 along the lines 3, 3 of Fig. 1; Fig. 4 is a detailed perspective of the primary and secondary contact structures of the switch of Fig. 1; Fig. 5 is a detailed perspective view of one of the annular rings 10 making up the structure of the switch of Fig. 1; Fig. 6 is a detailed perspective view of a series of rings of Fig. 5 shown in their stacked relationship but with contacts omitted, while Fig. 7 is a detailed view of the engagement of an annular ring by a primary switch contact.

Referring now to Figs. 1, 3, 5 and 6 of the drawings, there is represented an enclosed rotary selector switch comprising a stack of identical interchangeable annular rings 10 of molded "Bakelite" or equivalent insulation material. Each of the rings is formed on one side thereof with a plurality of regularly angularly spaced radially extending recesses 10*a* of a given depth for the outer portion of their radial extent and a greater depth for the inner portion of their radial extent as represented in Fig. 5. Each of the annular rings 10 is formed on the other side thereof with an annular groove 10*b* extending from approximately its radial midpoint to its inner periphery and of a depth approximately equal to the portion of the recess 10*a* of lesser depth. Each of the rings 10 is also provided with a plurality of regularly angularly spaced apertures 10*c* intermediate the recesses and provided for receiving bolts or studs 11, or equivalent means, extending therethrough for aligning the rings and securing them together.

The switch also includes a plurality of angularly spaced resilient primary contact elements 12 mounted in each of predetermined ones of the recesses in the rings 10, depending upon the desired circuit connections to be established by the switch. As seen in Figs. 1 and 7, each of the primary contacts 12 comprises a spring-clip type of contact element resiliently engaging its associated ring 10 and formed with a radially outwardly extending portion formed by the two sides of the clip riveted together by means of rivets 12*a* or the like. Each of the contact elements 12 is also provided with the radially inwardly extending contact portions 12*b* forming a spring clip contact of conventional construction. As indicated in Figs. 1 and 6 each of the contact elements 12 fits into a recess of its associated ring and also into a corresponding recess of an adjacent ring. With this construction there must be at least one intervening ring 10 between adjacent longitudinally spaced contact elements 12. The configuration of each of the contact elements 12 is such that it closely and resiliently engages its associated ring, closely conforming to the contour of the ring and being secured to the ring and positioned with respect thereto solely by the radial recesses 10*a* and the resilient engagement. As indicated in Fig. 1, the presence of the annular grooves 10*b* in the rings 10 permits a limited freedom of movement of the inner portions of the resilient contact extensions 12*b*, since these grooves form recesses inwardly of the radial portions of the ring 10 so that the contact elements 12 are not gripped by the rings in these regions. If desired, the end ones 10′ of the stack of rings may have the grooves and recesses omitted from their outer faces, either by machining these faces or molding them in this special form. Further, it may be desired to include plain end spacer rings 9 at either end of the stack to provide with the rings 10′ adequate bearing space for the rotary element to be described. The use of such plain end rings 9 and 10′ avoids the openings at the recesses 10*a*, which would admit dirt into the interior of the switch enclosure. Preferably a pair of end plates 13 and 31 enclose the ends of the stack of rings 10 and are secured thereto by the aligning bolts 11.

The rotary selector switch also comprises a relatively rotatable secondary contact element disposed within the stack of aligned rings 10 in alignment with and adapted selectively to engage the contact surfaces of the series of primary contact elements 12 associated with a particular one of the rings. Specifically, the rotatable secondary contact element comprises a shaft 15 mounted at one end in a bearing 16 supported from the end plate 13 and being supported at the other end in a panel bushing bearing 17*a* supported in an aperture in end-plate 31. On the shaft 15 is mounted an arbor 18 of molded "Bakelite" or other suitable insulation material. The arbor 18 has a cross-section of any desired non-circular configuration, such as the substantially square cross-section illustrated, and may be secured to the shaft in any suitable manner; for example it may be bonded or pinned thereto or, as illustrated, secured thereto by means of a key 19. Mounted on the arbor 18 are a plurality of contact disks 20 having central openings of the same configuration as the arbor 18, in this case substantially square, for engaging the arbor 18. Also mounted on the arbor 18 are a series of annular rings 21 of molded "Bakelite" or other suitable insulation material for separating and spacing the contact disks 20.

Preferably either the primary contact element or the secondary contact element comprises a snap-action contact structure. Preferably, and as shown in the drawings, the secondary contact element is so constructed. A detail of this snap-action secondary switch contact is shown in Fig. 4, in which the contact disk 20 comprises a support for the contact element which consists of a substantially rigid main current-carrying member 20*a* extending radially from and preferably integral with the supporting disk 20. The contact structure also includes auxiliary circuit breaking contact members mounted in a predetermined normal positional relation to the main contact member 20*a* but movable therefrom. Preferably, the main current-carrying member 20*a* is of substantially cruciform cross section, while the auxiliary contact members comprise channel-shaped elements 20*b* and 20*c* disposed at and normally engaging opposite sides of the main current-carrying contact 20*a* and pivotally supported therefrom by means of the pivot 20*d*. The snap-action contact structure also includes means for biasing the auxiliary members 20*b* and 20*c* into engagement with the sides of the main current-carrying contact 20*a*, this biasing means being in the form of a coil spring 20*e* having extensions engaging the auxiliary contact members 20*b* and 20*c*, as indicated. The contact disk 20 is also formed with shoulders 20*f* on either side of the main contact member 20 to limit positively the motion of the auxiliary contact members 20*a*, 20*b* about the pivot 20*d* and thus positively to effect their disengagement from the primary contact element 12. Also on each of the annular rings 10 supporting the primary contact elements 12 is a grounding or shorting contact element 12′, which is similar to the contact element 12 except that its spring clip contacts project radially inwardly to make continuous contact with the contact disk 20. This permits completion of an electrical circuit from

the primary contact element 12' to any selected one of the primary contact elements 12.

Preferably the switch structure is also provided with a strongly biased indexing structure to make certain that the rotatable secondary contact element 20 in each position is in correct radial alignment with the selected contact element 12. This indexing structure may be of any suitable type but, as illustrated in Figs. 1 and 2, comprises a pair of arms 22 supported from pivots 23 secured to an auxiliary end plate 14 and biased to closing position by means of a coil spring 24 secured to their unpivoted ends, the spring 24 preferably biasing over a pin 25 to cause the spring 24 normally to act substantially in the direction of motion of the outer ends of the pivoted arms 22, 22. A star wheel 27 having a plurality of angularly spaced notches 27*a* is secured to the shaft 15 in any suitable manner as by indexing it thereon or on the arbor 18 in the same manner as the contact discs or, as illustrated, by securing it to an auxiliary sleeve 17 by means of a pair of opposed clamping nuts 26, the sleeve 17 being locked to shaft 15 by the key 19. The pivoted arms 22, 22 carry the rollers 22*a*, 22*a* disposed to engage a pair of opposite notches 27*a* of the star wheel 27. It is clear, of course, that the notches 27*a* are positioned to be engaged by the rollers 22*a* of the biased arms 22 when the rotatable secondary contact element 20 is in exactly the right angular position to engage its associated primary contact element 12. Attached to one end of the shaft 15 is a manual operating knob or handle 28 to permit adjustment of the selector switch to the desired position. Also attached to the shaft 15 is an arm 29 engaging one or more stops 30 secured to the end plate 14 to limit the rotary motion of the secondary contact structure to any desired degree.

The operation of the rotary selector switch will be apparent from the foregoing description. In brief, operation of the manual knob or handle 28 is effective to rotate the secondary contact structure including the snap-action-secondary contact elements 20*a*, 20*b* and 20*c* into selective engagement with any of the angularly spaced primary contact elements 12 supported from the annular ring 10 with which the contact disk 20 is in axial alignment. As indicated clearly in Fig. 4, the configuration of the main contact element 20*a* and the auxiliary contact members 20*b*, 20*c* is preferably such that engagement of the main member with a cooperating spring clip contact 12 of the switch spreads the spring clips 12*b* so that the auxiliary members 20*b*, 20*c* are disengaged therefrom. In passing through a cooperating spring clip contact 12, engagement is made first with the leading one of the auxiliary contact members 20*b*, 20*c*, second, exclusively with the projecting portions of the main contact member 20*a*, and last with the trailing one of the auxiliary contact members 20*b*. As illustrated in Fig. 4, the auxiliary contact member 20*c* is about to disengage the contact element 12, assuming motion in a clockwise direction. It will be noted that the structure does not rely on the tension of the biasing spring 20*e* to effect disengagement between the auxiliary contact member 20*c* and the primary contact element 12 but this is effected by the shoulder 20*f* which positively disengages the member 20*c* from the spring clip contact 12. Immediately upon its disengagement, however, it is rapidly snapped back into its normal position by the spring 20*e*.

It will also be clear that, in the rotation of the contact disk 20 in the opposite direction, a corresponding rapid break of the circuit at the contact is made by the auxiliary contact member 20*b* in a similar manner; that is, the snap-action circuit breaking is effective in both directions of rotation of the secondary contact structure.

The snap-action contact structure described has a number of advantages. In the first place, the snap-action takes place at a predetermined point in the cycle of operation of the switch, due to the stop or shoulders 20*f* which limit the pivotal motion of the auxiliary contact members 20*b*, 20*c*. Furthermore, the wiping of the contact surfaces of the spring-clip contact 12 by the auxiliary contact members 20*b*, 20*c* is not in the direction of the movement of the main current-carrying contact element 20*a* but in fact is a complex motion which varies continuously in direction during the disengagement of the spring clip by the auxiliary contact member. This complex motion eliminates directional scoring and galling of the contact surfaces of the spring clip contact 12, thus avoiding impairment of its electrical contact with the main contact carrying member 20*a*. Further, it is noted that the auxiliary contact members 20*b*, 20*c*, which may be subject to arcing and burning in operation, do not carry the normal load current of the switch, which is carried exclusively by the main current-carrying member 20*a*, the auxiliary members 20*b*, 20*c* being disengaged due to the spreading of the spring clips 12*b* by the main contact member 20*a*. However, in cases in which this last feature may be unimportant, the auxiliary contact members 20*b*, 20*c* may entirely overlie the main contact member 20*a* so that it does not carry current directly to the stationary contact 12.

While in usual switch construction the snap-action type of structure described is desirable, in certain applications it may be permissible to omit one or both of the auxiliary snap-action contact members 20*b*, 20*c*. This may be true particularly if the switch is to be used in an alternating-current circuit in which it is desired to permit the current to be interrupted at the zero point in the alternating-current wave.

While in the structure illustrated in Fig. 1 only two switch decks are shown, that is, two annular rings 10 carrying primary contact elements, it will be apparent that the switch may be extended to any desired number of switch decks by the addition of duplicate annular rings 10 carrying primary contact elements 12 and additional secondary contact structures 20 on the switch shaft 15. Since the entire switch, irrespective of the number of decks, is built up of identical annular rings 10, misalignment of the contacts is minimized, thus allowing the construction of a switch having a very much greater number of decks than has heretofore been possible. In practice, the structure has been embodied in switches including twelve switch decks but the number of decks is limited primarily only by the torsional strength of the shaft and arbor.

Furthermore, it will be seen that an important feature of the switch construction described is that the switch contacts are completely enclosed in a substantially dust-proof chamber, which minimizes wear due to abrasive action of dust and dirt. At the same time, the multiple annular ring type of structure provides an extremely rugged and rigid switch construction which is highly resistant to shocks and blows. It will

also be apparent that any desired arrangement of contacts may be employed corresponding with the particular circuit combinations which it is desired to effect.

While there has been described what is at present considered to be the preferred embodiment of the invention, it will be apparent to those skilled in the art that various changes and modifications may be made therein without departing from the spirit or scope of the invention.

I claim:

1. An enclosed rotary selector switch comprising, a stack of aligned annular rings of insulation material having aligning apertures therein, at least one of said rings being provided with a plurality of angularly spaced radially extending recesses, means extending through said apertures for aligning and securing together said rings, primary contact elements each mounted in predetermined ones of said recesses and including contact portions extending radially inwardly from said one of said rings, and a relatively rotatable secondary contact element disposed within said stack in alignment with the contact surfaces of said primary contact elements, said secondary element being adapted to be in continuous contact with one of said primary contact elements and to selectively engage at least one other primary contact element, said stack of rings providing an enclosing housing for said contacts.

2. In a rotary selector switch including a plurality of angularly spaced primary contact elements and a relatively rotatable secondary contact element, one of said primary and secondary contact elements being of the spring-clip type, a snap-action contact structure for the other of said primary and secondary contact elements comprising, a support, a main current-carrying member carried by said support, auxiliary circuit-breaking contact members disposed at each edge of said main member and pivotally supported therefrom, said main member being of approximately cruciform cross section and said auxiliary members being channel shaped and normally engaging opposite sides of said main member, and means for biasing said auxiliary members into engagement with said main member, the configuration of said main and auxiliary members being such that, in passing through a cooperating spring-clip contact, engagement is made first with the leading one of said auxiliary members, second exclusively with the projecting portions of said main member, and last, with the trailing one of said auxiliary members.

3. An enclosed rotary selector switch comprising in combination a stack of aligned annular rings of insulation material, at least one of said rings being provided with a plurality of angularly spaced radially extending recesses, a primary contact element mounted in each of predetermined ones of said recesses and including a contact portion extending radially inwardly from said one of said rings, and a relatively rotatable secondary contact element disposed within said stack in alignment with and adapted selectively to engage the contact surfaces of said primary contact elements associated with said one of said rings, said secondary contact element comprising a snap-action contact structure including a support, a main current-carrying member carried by said support, an auxiliary circuit-breaking contact member mounted in a predetermined normal positional relation to said main member but movable relative thereto, and means for biasing said auxiliary member to said normal relation, with one of said main and auxiliary members being channel-shaped and telescoping relative to the other such that engagement of said main member with one of the other of said contacts elements disengages said auxiliary member therefrom, and means for limiting the motion of said auxiliary member relative to said main member positively to effect disengagement thereof from its cooperating contact element.

4. An enclosed rotary selector switch comprising a stack of aligning annular rings of insulation material having aligning apertures therein, at least one of said rings being provided with a plurality of angularly spaced radially extending recesses on one side thereof and an annular groove extending to the inner periphery on the other side, means extending thru said apertures for aligning and securing said rings, a primary contact having a mounting portion mounted in a recess in said ring and including a contact portion with spread-legs extending from said mounting portion radially inward of said ring, said mounting portion being arranged to embrace said ring at least on the two sides and the outer peripheral edge thereof, and a relatively rotatable secondary contact element disposed within said stack in alignment with and adapted selectively to engage the contact faces of said primary contact associated with said one of said rings, said stack of rings providing an enclosing housing for a primary contact.

5. An enclosed rotary selector switch comprising, a stack of aligned annular rings of insulation material at least one of said rings being provided with a plurality of angularly spaced radially extending recesses, a plurality of primary contact elements respectively mounted in the recesses of said one ring, and a relatively rotatable secondary contact element disposed within said stack in alignment with and adapted selectively to engage the contact surfaces of said primary contact elements associated with said one of said rings, said secondary contact element comprising a snap-action contact structure including a support, a main current-carrying member integral with said support, an auxiliary circuit-breaking contact member mounted in a predetermined normal position relative to said main member but movable relative thereto, pivot means on said support mounting thereon said auxiliary circuit-breaking contact member, and means for biasing said auxiliary member to said normal position including a spring mounted on the pivot means and engaging said auxiliary member, said main member having a relatively thin side portion on which said auxiliary member is adapted to slide and also being provided with a portion of greater thickness than the combined thicknesses of said side portion and said auxiliary member for carrying substantially the entire current when said main member is engaged with one of said primary contact elements, and said stack of rings providing an enclosing housing for said contact elements.

6. In a rotary selector switch including a plurality of angularly spaced primary contact elements and a relatively rotatable secondary contact element, a snap-action contact structure for said secondary contact element comprising a support, a main current-carrying member integral with said support and extending generally radially thereon in said switch, a pair of oppositely disposed channel-shaped auxiliary circuit-breaking contact members mounted on said main member in a predetermined normal positional

relation thereto but movable therefrom, a pivot on said support mounting said auxiliary members thereon, and means including a spring on said pivot for biasing said auxiliary members to said normal relation, said primary and secondary contact elements being so arranged that rotary movement of said secondary contact element within said switch causes said secondary element successively to engage and disengage said primary contact elements, and with said engagement of each, of said primary contact elements with an auxiliary contact member restraining the latter relative to the main member to tension said spring, said main member having a portion extending axially of said secondary contact element to a greater extent than said auxiliary members thereby to carry substantially all of the current when said main member is engaged with a primary contact element.

7. In a rotary selector switch including a plurality of angularly spaced primary contacts and a relatively rotatable secondary contact element adapted selectively to engage said primary contacts, each of said primary contacts comprising a pair of primary contact elements resiliently spaced at one end of each to receive a secondary contact element and rigidly joined at the other end of each into a connecting portion, an interchangeable contact assembly comprising an annular ring of insulation material having a plurality of angularly-spaced radially extending recesses and one of said primary contact elements mounted in each of predetermined ones of said recesses, and with the pair of contact elements in a primary contact resiliently engaging said rings, said primary contacts being positioned and secured in said selector switch by said recesses and said resilient engagement with said ring,

said connecting portion of each of said primary contacts being arranged to embrace said ring at least on the two sides and the outer peripheral edge thereof.

8. In a rotary selector switch including a plurality of angularly spaced primary contacts and a relatively rotatable secondary contact element adapted selectively to engage said primary contacts, an interchangeable stationary contact assembly comprising an annular ring of insulation material provided with a plurality of angularly-spaced radially extending recesses and one of said primary contacts mounted with a portion thereof in each of predetermined ones of said recesses and resiliently engaging said ring, each of said contacts comprising a pair of contact elements each of which comprises an outwardly extending terminal lug and an inwardly extending portion with the terminal lugs being joined together and the inwardly extending portions forming a spring clip, said primary contacts being positioned and secured in the rotary selector switch by said recesses and said resilient engagement with said ring, each of said primary contacts being adapted to embrace said ring at least on the two sides and the outer peripheral edge thereof.

GORDON E. GRAY.

REFERENCES CITED

The following references are of record in the file of this patent:

UNITED STATES PATENTS

Number	Name	Date
648,951	Hanson	May 8, 1900
2,038,405	Beach et al.	Apr. 21, 1936