(12) INTERNATIONAL APPLICATION PUBLISHED UNDER THE PATENT COOPERATION TREATY (PCT)

(19) World Intellectual Property Organization
International Bureau

(43) International Publication Date
21 April 2016 (21.04.2016)

WIPO | PCT

(10) International Publication Number
WO 2016/060926 A1

(51) International Patent Classification:
B01D 27/00 (2006.01) *B01D 35/30* (2006.01)
B01D 27/08 (2006.01)

(21) International Application Number:
PCT/US2015/054652

(22) International Filing Date:
8 October 2015 (08.10.2015)

(25) Filing Language: English

(26) Publication Language: English

(30) Priority Data:
1459797 13 October 2014 (13.10.2014) FR

(71) Applicant: **CUMMINS FILTRATION IP, INC.** [US/US]; 500 Jackson Street, Columbus, Indiana 47201 (US).

(72) Inventors: **MALGORN, Gérard**; 33 rue Jean Savina, F-29000 Quimper (FR). **MESTDAG, Gauthier**; Biscoul Huella, F-29710 Plogastel-Saint-Germain (FR). **BONZI, Pierrick**; 13 rue du jusant, F-29910 Tregunc (FR). **LE VEN, Arnaud**; Kerhamus, F-29500 Ergue-Gaberic (FR). **SIMON, Stéphane**; 7, rue Breiz Izel, F-29180 Guengat (FR). **MENEZ, Loïck**; 115 Hent Lestrezivit, F-29170 Fouesnant (FR).

(74) Agents: **BROWN, Marshall J.** et al.; Foley & Lardner LLP, 3000 K St. NW., Washington, District of Columbia 20007 (US).

(81) Designated States *(unless otherwise indicated, for every kind of national protection available)*: AE, AG, AL, AM, AO, AT, AU, AZ, BA, BB, BG, BH, BN, BR, BW, BY, BZ, CA, CH, CL, CN, CO, CR, CU, CZ, DE, DK, DM, DO, DZ, EC, EE, EG, ES, FI, GB, GD, GE, GH, GM, GT, HN, HR, HU, ID, IL, IN, IR, IS, JP, KE, KG, KN, KP, KR, KZ, LA, LC, LK, LR, LS, LU, LY, MA, MD, ME, MG, MK, MN, MW, MX, MY, MZ, NA, NG, NI, NO, NZ, OM, PA, PE, PG, PH, PL, PT, QA, RO, RS, RU, RW, SA, SC, SD, SE, SG, SK, SL, SM, ST, SV, SY, TH, TJ, TM, TN, TR, TT, TZ, UA, UG, US, UZ, VC, VN, ZA, ZM, ZW.

(84) Designated States *(unless otherwise indicated, for every kind of regional protection available)*: ARIPO (BW, GH, GM, KE, LR, LS, MW, MZ, NA, RW, SD, SL, ST, SZ, TZ, UG, ZM, ZW), Eurasian (AM, AZ, BY, KG, KZ, RU, TJ, TM), European (AL, AT, BE, BG, CH, CY, CZ, DE,

[Continued on next page]

(54) Title: SPIN-ON FILTER FOR SUCTION-SIDE AND PRESSURE-SIDE APPLICATIONS IN FILTRATION SYSTEMS

(57) Abstract: A Spin-on filter assembly that can be used with both suction-side and pressure-side filtration systems is described. The filter assembly screws onto a filter mounting head. The filter mounting head is part of a filtration system that provides fluid to be filtered to the filter assembly. The filter assembly filters the fluid to be filtered through a filter media contained within the filter assembly and provides the filtered fluid back to the filter mounting head. The filter assembly includes an upper seal that seals the clean side of the filter media from the dirty side of the filter media when the filter assembly is connected to the filter mounting head in an installed position. The upper seal includes a sealing ridge that has an elongated shape and is flexible such that the filter assembly can be used on both pressure-side and suction side applications in filtration systems.

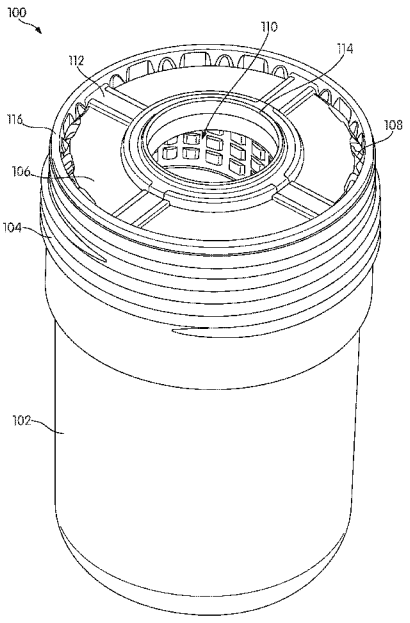

FIG. 1

WO 2016/060926 A1

DK, EE, ES, FI, FR, GB, GR, HR, HU, IE, IS, IT, LT, LU, LV, MC, MK, MT, NL, NO, PL, PT, RO, RS, SE, SI, SK, SM, TR), OAPI (BF, BJ, CF, CG, CI, CM, GA, GN, GQ, GW, KM, ML, MR, NE, SN, TD, TG).

Published:

— *with international search report (Art. 21(3))*

SPIN-ON FILTER FOR SUCTION-SIDE AND PRESSURE-SIDE APPLICATIONS IN FILTRATION SYSTEMS

CROSS-REFERENCE TO RELATED APPLICATION

[0001] The present application claims the benefit of and priority to French Patent Application No. 1459797, filed October 13, 2014, which is incorporated herein by reference in its entirety.

TECHNICAL FIELD

[0002] The present disclosure relates generally to a spin-on filter for use in fluid filtration, such as oil or fuel filtration, for an internal combustion engine.

BACKGROUND

[0003] Fluid filtration systems are used to provide clean fluid to a device. For example, internal combustion engines may have multiple filtration systems to provide clean fuel, clean oil, and clean hydraulic fluid to the various components of the internal combustion engines. Each filtration system generally includes a filter element having a filter media that filters the fluid. Some filtration systems, such as fuel and oil filtration systems, often use spin on filter assemblies. The spin on filter assemblies house the filter element and are "spun on" to a filter mounting head to attach the filter assembly to the filtration systems.

[0004] Depending on the arrangement of the filtration system, the filter element may be positioned on a suction side of the filtration system (e.g., in a vacuum assisted filtration system, upstream of a pump that pumps the fluid to be filtered, etc.) or on a pressure side of the filtration system (e.g., downstream of a pump that pumps the fluid to be filtered). The different pressure arrangements can require different seal arrangements. Accordingly, technicians are often required to keep multiple different replacement filter elements having different seal arrangements to service the differently arranged filtration systems.

SUMMARY

[0005] One embodiment relates to a filter assembly. The filter assembly includes a housing having an open end and a closed end. A filter element is positioned within the housing and is configured to filter a fluid. The filter assembly further includes an endcap positioned adjacent to the open end of the housing. The end cap is coupled to a first end of the filter element. The filter assembly includes a seal coupled to the endcap and configured to seal a clean side of the filter element from a dirty side of the filter element when the filter assembly is connected in an installed position to a filter mounting head of a filtration system. The seal is configured to seal against the filter mounting head in both suction-side applications and pressure-side applications in filtration systems.

[0006] Another embodiment relates to a filtration system. The filtration system includes a filter mounting head including a circumferential groove and a filter housing coupled to the filter mounting head through a threaded connection. The filter housing having an open end and a closed end. A filter element is positioned within the housing and is configured to filter a fluid. the filter element is positioned in a pressure-side application within the filtration system. The filtration system further includes an endcap positioned adjacent to the open end of the housing. The end cap is coupled to a first end of the filter element. The filtration system includes a seal coupled to the endcap and configured to seal a clean side of the filter element from a dirty side of the filter element. The seal includes an outer sealing ridge that at least partially engages the circumferential groove. A pressure of the fluid flowing through the filtration system bends the outer sealing ridge against an outer surface of the circumferential groove to form a seal.

[0007] Yet another embodiment relates to a filtration system. The filtration system includes a filter mounting head including a circumferential groove and a filter housing coupled to the filter mounting head through a threaded connection. The filter housing having an open end and a closed end. A filter element is positioned within the housing and is configured to filter a fluid. the filter element is positioned in a suction-side application within the filtration system. The filtration system further includes an endcap positioned adjacent to the open end of the housing. The end cap is coupled to a first end of the filter element. The filtration system includes a seal

coupled to the endcap and configured to seal a clean side of the filter element from a dirty side of the filter element. The seal includes an outer sealing ridge that at least partially engages the circumferential groove. A pressure of the fluid flowing through the filtration system bends the outer sealing ridge against an inner surface of the circumferential groove to form a seal.

[0008] These and other features, together with the organization and manner of operation thereof, will become apparent from the following detailed description when taken in conjunction with the accompanying drawings, wherein like elements have like numerals throughout the several drawings described below.

BRIEF DESCRIPTION OF THE FIGURES

[0009] FIG. 1 is a perspective view of a spin-on filter assembly according to an exemplary embodiment.

[0010] FIG. 2 is a cross-sectional view of an upper portion of the filter assembly of FIG. 1.

[0011] FIG. 3 is a close-up cross-sectional view of the filter assembly of FIG. 1 installed on a filter mounting head.

[0012] FIG. 4 is a close-up cross-sectional view of the filter assembly of FIG. 1 installed on a different filter mounting head than the filter head depicted in FIG. 3.

[0013] FIG. 5 is a cross-sectional view of a spin-on filter assembly according to another exemplary embodiment.

[0014] FIG. 6 is a cross-sectional view of the spin-on filter assembly of FIG. 5 installed on a filter mounting head.

[0015] FIG. 7 is a close-up cross-sectional view of the spin-on filter assembly and mounting head of FIG. 6

DETAILED DESCRIPTION

[0016] Referring generally to the figures, a spin-on filter assembly is shown and described. The filter assembly screws onto a filter mounting head. The filter mounting head is part of a filtration system that provides fluid to be filtered to the filter assembly. The filter assembly filters the fluid to be filtered through a filter media contained within the filter assembly and provides the filtered fluid back to the filter mounting head. The filter assembly includes a seal that seals the clean side of the filter media from the dirty side of the filter media when the filter assembly is connected to the filter mounting head in an installed position. The seal includes a sealing ridge that has an elongated shape and is flexible such that the filter assembly can be used on both pressure-side and suction side applications in filtration systems.

[0017] Referring to FIG. 1, a perspective view of a spin-on filter assembly 100 is shown according to an exemplary embodiment. The filter assembly 100 is shown in an uninstalled position (e.g., not attached to a filter mounting head). The filter assembly 100 includes a housing 102 having an open top end and a closed bottom end. The housing 102 is a shell housing having a generally cylindrical shape. The housing 102 includes a threaded section 104 on an exterior surface of the housing and adjacent to the open top end. As described in further detail below, a filter element 202 is positioned within the housing 102. The filter element 202 is configured to filter a fluid (e.g., fuel, oil, hydraulic fluid, water, etc.). A top end of the filter element 202 is sealed by a bottom surface of an endcap 106 that is coupled to the filter element 202. The endcap 106 is positioned adjacent to the open end of the housing 102. The endcap 106 includes a plurality of circumferential openings 108 and a central opening 110. The top end of the filter element 202 is positioned between the circumferential openings 108 and the central opening 110 such that fluid passing through the filter assembly 100 is forced to pass through the filter element 202. In some arrangements, the circumferential openings 108 are inlet openings (e.g., openings that receive fluid to be filtered), and the central opening 110 is an outlet opening (e.g., openings that provides filtered fluid to a component, such as an internal combustion engine). In other arrangements, the central opening 110 is an inlet opening, and the circumferential openings 108 are outlet openings.

[0018] The filter assembly 100 includes an upper seal 112. The upper seal 112 is coupled to a top surface of the endcap 106. The top surface of the endcap 106 is opposite the bottom surface of the endcap 106. The upper seal 112 includes an inner sealing ridge 114 and an outer sealing ridge 116. The inner sealing ridge 114 is positioned between the central opening and the circumferential openings on the top surface of the endcap 106. The inner sealing ridge 114 is adjacent to the central opening 110. In some arrangements, the inner sealing ridge 114 and the outer sealing ridge 116 are two separate seals. The inner and outer sealing ridges 114 and 116 seal against a filter mounting head (e.g., filter mounting head 302 as shown in FIG. 3, filter mounting head 402 as shown in FIG. 4, etc.). The upper seal 112 seals a clean side of the filter element 202 from a dirty side of the filter element 202 when the filter element 100 is connected in an installed position to a filter mounting head. As described in further detail below with respect to FIGS. 3 and 4, the upper seal 112 is configured to properly seal the against the filter mounting head in both suction-side and pressure-side applications in filtration systems. A suction-side application in filtration system refers to the filter assembly 100 being positioned in a filtration system that uses a negative pressure to draw fluid through the filter assembly 100. The negative pressure may be caused by a vacuum or a pump positioned downstream of the filter assembly 100. A pressure-side application in a filtration system refers to the filter assembly being positioned in a filtration system that uses a positive pressure to push fluid through the filter assembly 100. The positive pressure may be caused by a pump positioned upstream of the filter assembly 100. The outer sealing ridge 116 is elongated and flexible, which allows the upper seal 112 to properly seal in both pressure-side and suction side applications within filtration systems.

[0019] Referring to FIG. 2, a cross-sectional view of an upper portion of the filter assembly 100 is shown. The filter element 202 includes filter media that is suitable for filtering the fluid with which the filter assembly 100 will be used. The filter media may be pleated filter media (e.g., pleated cellulose filter media), non-pleated filter media, or the like. The filter element 202 depicted in FIG. 2 is generally cylindrical in shape (although other shapes may be possible) and has an open center region. The open center region is supported by a support core 204. The support core 204 helps to prevent the filter element 202 from collapsing under the pressure of

the fluid as the fluid flows through the filter media. In some arrangements, the upper seal 112 is connected to the endcap 106 through a snap-fit connection. In such arrangements, the endplate includes a snap projection 206 that is received in a snap opening 208 of the upper seal 112 when the upper seal is connected to the endcap 106. In alternative arrangements, the upper seal 112 is molded into the endcap 106 or adhered to the endcap with adhesive.

[0020] Referring to FIG. 3, a close-up cross-sectional view of the filter assembly 100 installed on a filter mounting head 302 is shown. The filter assembly 100 is in the installed position on the filter mounting head 302. The filter mounting head 302 is part of a filtration system that supplies filtered fluid (e.g., fuel, oil, hydraulic fluid, etc.) to a device, such as an internal combustion engine. In the filtration system of FIG. 3, the filter assembly 100 is positioned in a pressure-side application. The filter mounting head 302 includes a threaded portion 304 that mates with the threaded portion 104 of the housing 102. When the filter assembly 100 is screwed onto the filter mounting head 302, the filter mounting head 302 interacts with the upper seal 112 to seal the clean side of the filter element 202 from the dirty side of the filter element 202.

[0021] The filter mounting head 302 includes a circumferential outer groove 306 that at least partially receives the outer sealing ridge 116 of the upper seal 112 when the filter assembly 100 is in the installed position. The outer groove 306 is larger than the outer sealing ridge 116. Since the outer sealing ridge 116 is elongated and flexible, the outer sealing ridge 116 can bend to press and seal against either an inside surface or an outside surface of the outer groove 306. Because the filter assembly 100 is positioned in a pressure-side application, the pressure of the fluid flowing through the filter assembly 100 bends the outer sealing ridge 116 against the outer surface of the outer groove 306 (e.g., the outer sealing ridge 116 bends radially outwardly from the pressure of the fluid). The pressure of the fluid against the outer sealing ridge 116 causes good contact pressure between the outer sealing ridge 116 and the outside surface of the outer groove 306. Accordingly, the outer sealing ridge 116 creates a cylindrical contact seal with the outside surface of the outer groove 306. The filter mounting head 302 further includes an inner sealing wall 308. The inner sealing wall 308 seals against the inner sealing ridge 114 when the

filter assembly 100 is in the installed position. In some arrangements, a middle projection 310 rests against an elevated edge 312 of the upper seal 112.

[0022] Referring to FIG. 4, a close-up cross-sectional view of the filter assembly 100 installed on a filter mounting head 402 is shown. The filter assembly 100 is in the installed position on the filter mounting head 402. The filter mounting head 402 is similar to the filter mounting head 302 of FIG. 3. However, the filter mounting head 402 is positioned in a suction side application on the filtration system, not in a pressure-side application as is the filter mounting head 302. The filter mounting head 402 includes a threaded portion 404 that mates with the threaded portion 104 of the housing 102. When the filter assembly 100 is screwed onto the filter mounting head 402, the filter mounting head 402 interacts with the upper seal 112 to seal the clean side of the filter element 202 from the dirty side of the filter element 202.

[0023] The filter mounting head 402 includes an outer groove 406 that receives the outer sealing ridge 116 of the upper seal 112 when the filter assembly 100 is in the installed position. The outer groove 406 is larger than the outer sealing ridge 116. Since the outer sealing ridge 116 is elongated and flexible, the outer sealing ridge 116 can bend to press and seal against either an inside surface or an outside surface of the outer groove 406. Because the filter assembly 100 is positioned in a suction-side application, the pressure of the fluid flowing through the filter assembly 100 bends the outer sealing ridge 116 against the inner surface of the outer groove 406 (e.g., the outer sealing ridge 116 bends radially inwardly from the pressure of the fluid). The pressure of the fluid against the outer sealing ridge 116 causes good contact pressure between the outer sealing ridge 116 and the inner surface of the outer groove 406. Accordingly, the outer sealing ridge 116 creates a cylindrical contact seal with the outside surface of the outer groove 406. The filter mounting head 402 further includes an inner sealing wall 408. The inner sealing wall 408 seals against the inner sealing ridge 114 when the filter assembly 100 is in the installed position. In some arrangements, a middle projection 410 rests against an elevated edge 412 of the upper seal 112.

[0024] Since the outer sealing ridge 116 is elongated and flexible, the upper seal 112 can be used with both pressure-side and suction-side applications in filtration systems. The design of

the outer sealing ridge 116 eliminates the need for service technicians to carry separate filter assemblies for pressure-side applications and for suction-side applications. Additionally, the use of a single type of spin-on filter assembly for both types of applications reduces the likelihood that a service technician replaces a filter assembly with the wrong type of filter assembly (e.g., reduces the chance that a service technician places a pressure-side specific filter in a suction-side application).

[0025] Referring to FIG. 5, a cross-sectional view of a spin-on filter assembly 500 is shown according to another exemplary embodiment. The filter assembly 500 is shown in an uninstalled position (e.g., not attached to the filter mounting head 602 as shown in FIG. 6). The filter assembly 500 is similar to the filter assembly 100. The filter assembly 500 a housing 502 having an open top end and a closed bottom end. The housing 502 is a shell housing having a generally cylindrical shape. The housing 502 includes a threaded section 504 on an exterior surface of the housing and adjacent to the open top end. A filter element 506 is positioned within the housing 502. The filter element 506 is configured to filter a fluid (e.g., fuel, oil, hydraulic fluid, water, etc.).

[0026] A top end of the filter element 506 is sealed by a bottom surface of a top endcap 508 that is coupled to the filter element 506. The top endcap 508 is positioned adjacent to the open end of the housing 502. The top endcap 508 includes a plurality of circumferential openings (arranged in a similar manner to the circumferential openings 108 of filter assembly 100) and a central opening 510. The top end of the filter element 506 is positioned between the circumferential openings and the central opening 510 such that fluid passing through the filter assembly 500 is forced to pass through the filter element 506. In some arrangements, the circumferential openings are inlet openings (e.g., openings that receive fluid to be filtered), and the central opening 510 is an outlet opening (e.g., openings that provides filtered fluid to a component, such as an internal combustion engine). In other arrangements, the central opening 510 is an inlet opening, and the circumferential openings are outlet openings.

[0027] The filter assembly 500 includes an upper seal. The upper seal is coupled to a top surface of the top endcap 508. The top surface of the top endcap 508 is opposite the bottom

surface of the top endcap 508. The upper seal includes an inner sealing ridge 512 and an outer sealing ridge 514. The inner sealing ridge 512 is positioned between the central opening 510 and the circumferential openings on the top surface of the top endcap 508. The inner sealing ridge 512 is adjacent to the central opening 510. In some arrangements, the inner sealing ridge 512 and the outer sealing ridge 514 are two separate seals. The inner and outer sealing ridges 512 and 514 seal against a filter mounting head (e.g., filter mounting head 602 as shown in FIG. 6). The upper seal seals a clean side of the filter element 506 from a dirty side of the filter element 506 when the filter element 500 is connected in an installed position to a filter mounting head. As described above with respect to filter assembly 100 and upper seal 112 with respect to FIGS. 3 and 4, the upper seal of filter assembly 500 is configured to properly seal the against the filter mounting head in both suction-side and pressure-side applications in filtration systems. Accordingly, the outer sealing ridge 514 is elongated and flexible, which allows the upper seal to properly seal in both pressure-side and suction side applications within filtration systems.

[0028] The filter element 506 includes filter media that is suitable for filtering the fluid with which the filter assembly 500 will be used. The filter media may be pleated filter media (e.g., pleated cellulose filter media), non-pleated filter media, or the like. In some arrangements, the filter element 506 is a multi-stage filter element (e.g., a two-stage filter element, a three-stage filter element, etc.). The filter element 506 as depicted in FIG. 5 is generally cylindrical in shape (although other shapes may be possible) and has an open center region. The open center region is supported by a support core 516. The support core 516 helps to prevent the filter element 506 from collapsing under the pressure of the fluid as the fluid flows through the filter media. In some arrangements, the upper seal is connected to the top endcap 508 through a snap-fit connection (e.g., in a similar manner as described above with respect to filter assembly 100). In alternative arrangements, the upper seal is molded into the top endcap 508 or adhered to the endcap with adhesive. A bottom end of the filter element 506 is sealed by a top surface of a bottom endcap 518 that is coupled to the filter element 506. The bottom endcap 518 is positioned adjacent to the closed end of the housing 502. The bottom endcap 518 includes a central opening 520. The bottom end of the filter element 506 is sealed by the bottom endcap

518, and the bottom endcap 518 seals against an inner wall of the housing 502 such that fluid passing through the filter assembly 500 is forced to pass through the filter element 506.

[0029] The filter assembly 500 includes a water in fuel ("WIF") pin 522 extending through the open center of the filter element 506. The WIF pin 522 forms part of a WIF sensor when the filter assembly 500 is attached to a mounting head of a filtration system that includes a WIF sensor. Water that is separated from the fluid being filtered by the filter element 506 accumulates in a bottom portion of the housing 502. If the water level within the housing 502 reaches the WIF pin 522, the WIF sensor detects a high water level within the housing 502. In some arrangements, a control system in communication with the WIF sensor initiates an alert to an operator of the internal combustion engine (e.g., a dash light may be turned on, an audible alarm may be triggered, etc.) to indicate that the water needs to be drained. In other arrangements, the control system opens a valve in the housing to drain the accumulated water. The WIF pin 522 is supported by a bracket 524. The bracket 524 is coupled to the top endcap 508.

[0030] FIG. 6 shows a cross-sectional view of the spin-on filter assembly 500 installed on a filter mounting head 602. The filter assembly 500 is in the installed position on the filter mounting head 602. The filter mounting head 602 is part of a filtration system that supplies filtered fluid (e.g., fuel, oil, hydraulic fluid, etc.) to a device, such as an internal combustion engine. The filter assembly 500 is positioned in either a pressure-side application or a suction-side application. The filter mounting head 602 includes a threaded portion 604 that mates with the threaded portion 504 of the housing 502. When the filter assembly 500 is screwed onto the filter mounting head 602, the filter mounting head 602 interacts with inner sealing ridge 512 and the outer sealing ridge 514 of the upper seal to seal the clean side of the filter element 506 from the dirty side of the filter element 506.

[0031] As shown in FIG. 7, the filter mounting head 602 includes a circumferential outer groove 702 that at least partially receives the outer sealing ridge 514 of the upper seal when the filter assembly 500 is in the installed position. FIG. 7 is a close-up cross sectional view of the filter assembly 500 installed on the mounting head 602. The outer groove 702 is larger than the

tip 704 of the outer sealing ridge 514. Since the outer sealing ridge 514 is elongated and flexible, the outer sealing ridge 514 can bend to press and seal against either an inside surface or an outside surface of the outer groove 702 (depending on whether the filter assembly 500 is positioned in a pressure-side application or a suction side application). Accordingly, the outer sealing ridge 514 creates a cylindrical contact seal with the outside surface of the outer groove 702.

[0032] As utilized herein, the terms "approximately," "about," "substantially," and similar terms are intended to have a broad meaning in harmony with the common and accepted usage by those of ordinary skill in the art to which the subject matter of this disclosure pertains. It should be understood by those of skill in the art who review this disclosure that these terms are intended to allow a description of certain features described and claimed without restricting the scope of these features to the precise numerical ranges provided. Accordingly, these terms should be interpreted as indicating that insubstantial or inconsequential modifications or alterations of the subject matter described and claimed are considered to be within the scope of the invention as recited in the appended claims.

[0033] It should be noted that the term "exemplary" as used herein to describe various embodiments is intended to indicate that such embodiments are possible examples, representations, and/or illustrations of possible embodiments (and such term is not intended to connote that such embodiments are necessarily extraordinary or superlative examples).

[0034] References herein to the positions of elements (e.g., "top," "bottom," "above," "below," etc.) are merely used to describe the orientation of various elements in the FIGURES. It should be noted that the orientation of various elements may differ according to other exemplary embodiments, and that such variations are intended to be encompassed by the present disclosure.

[0035] It is important to note that the construction and arrangement of the various exemplary embodiments are illustrative only. Although only a few embodiments have been described in detail in this disclosure, those skilled in the art who review this disclosure will readily appreciate that many modifications are possible (e.g., variations in sizes, dimensions,

structures, shapes and proportions of the various elements, values of parameters, mounting arrangements, use of materials, colors, orientations, etc.) without materially departing from the novel teachings and advantages of the subject matter described herein. For example, elements shown as integrally formed may be constructed of multiple parts or elements, the position of elements may be reversed or otherwise varied, and the nature or number of discrete elements or positions may be altered or varied. The order or sequence of any process or method steps may be varied or re-sequenced according to alternative embodiments. Other substitutions, modifications, changes and omissions may also be made in the design, operating conditions and arrangement of the various exemplary embodiments without departing from the scope of the present invention.

WHAT IS CLAIMED IS:

1. A filter assembly comprising:

a housing having an open end and a closed end;

a filter element positioned within the housing and configured to filter a fluid;

an endcap positioned adjacent to the open end of the housing, the end cap is coupled to a first end of the filter element; and

a seal coupled to the endcap and configured to seal a clean side of the filter element from a dirty side of the filter element when the filter assembly is connected in an installed position to a filter mounting head of a filtration system, the seal is configured to seal against the filter mounting head in both suction-side applications and pressure-side applications in filtration systems.

2. The filter assembly of claim 1, wherein the endcap includes a central opening and a plurality of circumferential openings.

3. The filter assembly of claim 2, wherein the first end of the filter element is positioned between the central opening and the plurality of circumferential openings.

4. The filter assembly of claim 2, wherein the seal includes an inner sealing ridge and an outer sealing ridge.

5. The filter assembly of claim 4, wherein the outer sealing ridge is elongated and flexible.

6. The filter assembly of claim 5, wherein the outer sealing ridge bends a first direction to create a seal in a suction-side application and a second direction to create the seal in a pressure-side application.

7. The filter assembly of claim 4, wherein the inner sealing ridge is adjacent to the central opening.

8. The filter assembly of claim 7, wherein the inner sealing ridge is positioned between the central opening and the plurality of circumferential openings.

9. The filter assembly of claim 1, further comprising a water in fuel sensor pin, the water in fuel sensor pin connecting with an electrical power source in the filer mounting head when the filter element is installed in the filter assembly, the water in fuel sensor pin configured to sense water and a water level inside the filter assembly.

10. A filtration system comprising:

a filter mounting head including a circumferential groove;

a filter housing coupled to the filter mounting head through a threaded connection, the filter housing having an open end and a closed end;

a filter element positioned within the housing and configured to filter a fluid, the filter element is positioned in a pressure-side application within the filtration system;

an endcap positioned adjacent to the open end of the housing, the end cap is coupled to a first end of the filter element; and

a seal coupled to the endcap and configured to seal a clean side of the filter element from a dirty side of the filter element, the seal including an sealing ridge that at least partially engages the circumferential groove, wherein a pressure of the fluid flowing through the filtration system bends the outer sealing ridge against an outer surface of the circumferential groove to form a seal.

11. The filtration system of claim 10, wherein the endcap includes a central opening and a plurality of circumferential openings.

12. The filtration system of claim 11, wherein the first end of the filter element is positioned between the central opening and the plurality of circumferential openings.

13. The filtration system of claim 11, wherein the seal includes an inner sealing ridge.

14. The filtration system of claim 13, wherein the outer sealing ridge is elongated and flexible.

15. The filtration system of claim 11, wherein the inner sealing ridge is adjacent to the central opening.

16. The filtration system of claim 15, wherein the inner sealing ridge is positioned between the central opening and the plurality of circumferential openings.

17. The filtration system of claim 10, wherein the filter element further comprises a water in fuel sensor pin, the water in fuel sensor pin connecting with an electrical power source in the filer mounting head when the filter element is installed in the filtration system, the water in fuel sensor pin configured to sense water and a water level inside the filtration system.

18. A filtration system comprising:

a filter mounting head including a circumferential groove;

a filter housing coupled to the filter mounting head through a threaded connection, the filter housing having an open end and a closed end;

a filter element positioned within the housing and configured to filter a fluid, the filter element is positioned in a suction-side application within the filtration system;

an endcap positioned adjacent to the open end of the housing, the end cap is coupled to a first end of the filter element; and

a seal coupled to the endcap and configured to seal a clean side of the filter element from a dirty side of the filter element, the seal including an outer sealing ridge that at least partially engages the circumferential groove, wherein a pressure of the fluid flowing through the filtration system bends the outer sealing ridge against an inner surface of the circumferential groove to form a seal.

19. The filtration system of claim 18, wherein the endcap includes a central opening and a plurality of circumferential openings.

20. The filtration system of claim 19, wherein the first end of the filter element is positioned between the central opening and the plurality of circumferential openings.

21. The filtration system of claim 19, wherein the seal includes an inner sealing ridge.

22. The filtration system of claim 21, wherein the outer sealing ridge is elongated and flexible.

23. The filtration system of claim 19, wherein the inner sealing ridge is adjacent to the central opening.

24. The filtration system of claim 23, wherein the inner sealing ridge is positioned between the central opening and the plurality of circumferential openings.

25. The filtration system of claim 18, wherein the filter element further comprises a water in fuel sensor pin, the water in fuel sensor pin connecting with an electrical power source in the filer mounting head when the filter element is installed in the filtration system, the water in fuel sensor pin configured to sense water and a water level inside the filtration system.

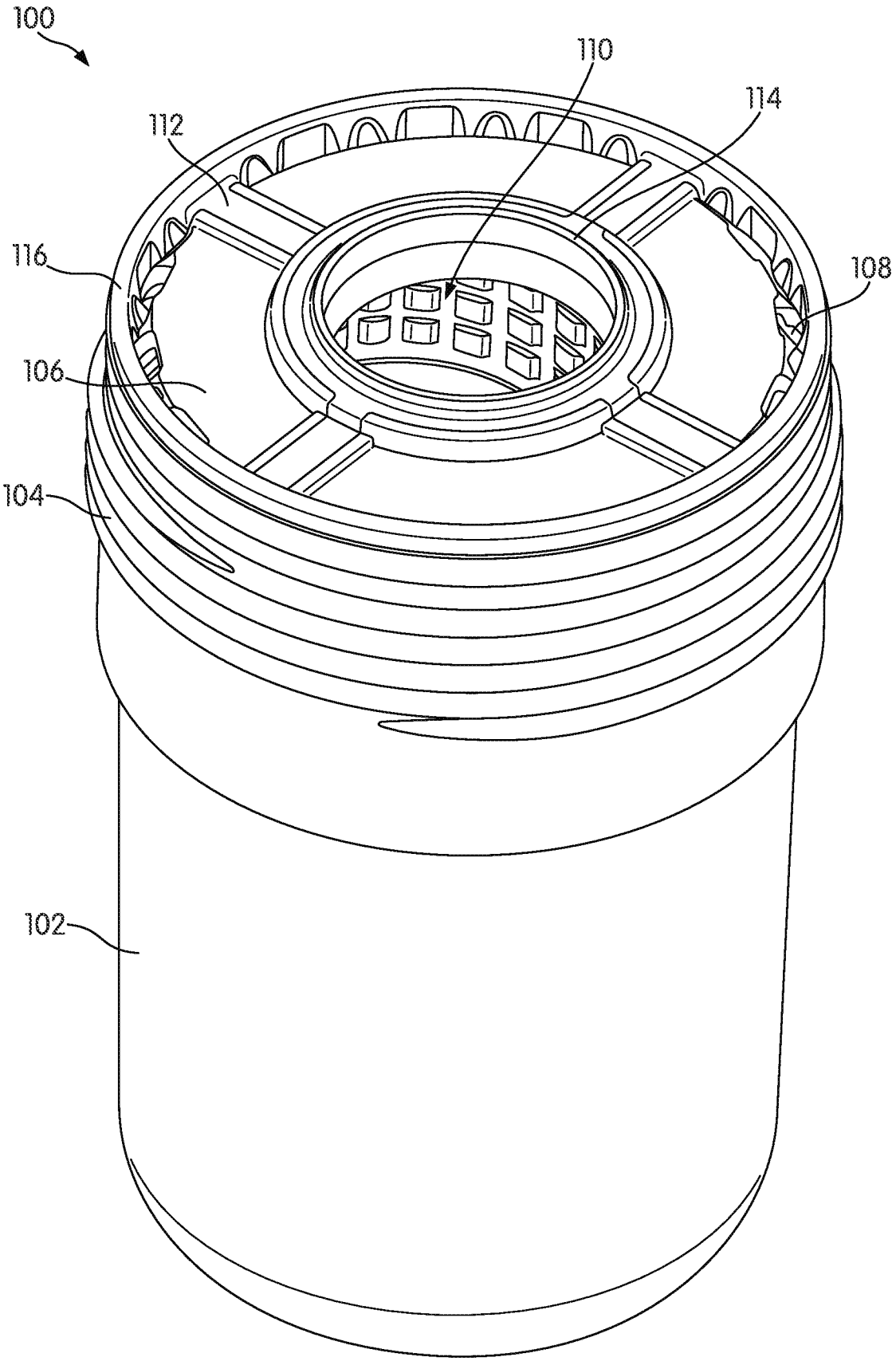

FIG. 1

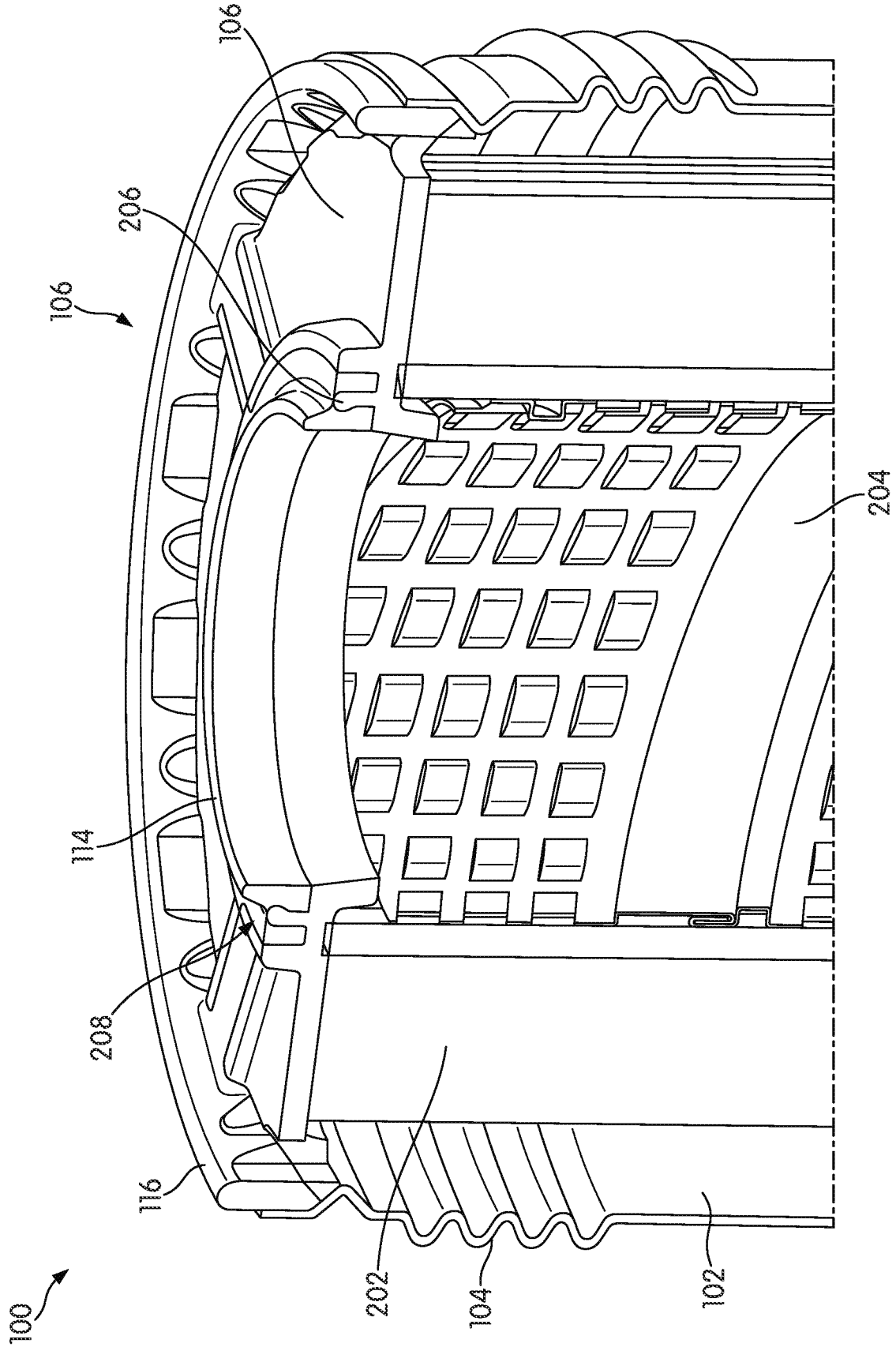

FIG. 2

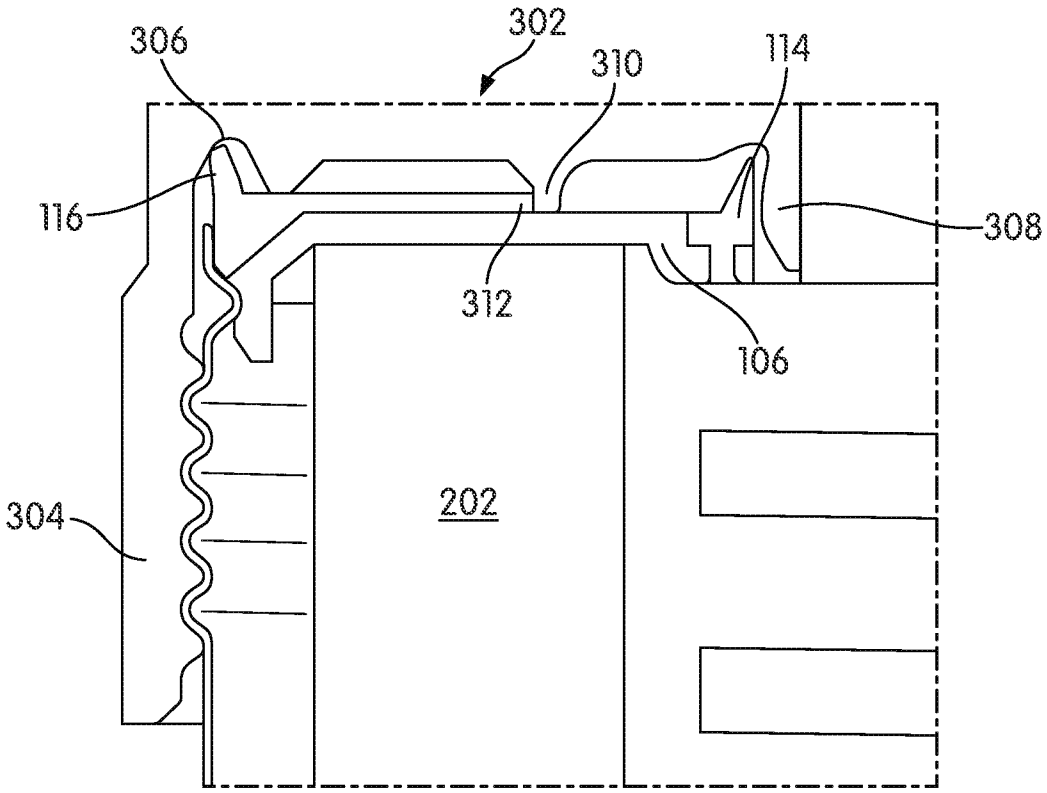
306
302
310
114
116
308
312
106
202
304

FIG. 3

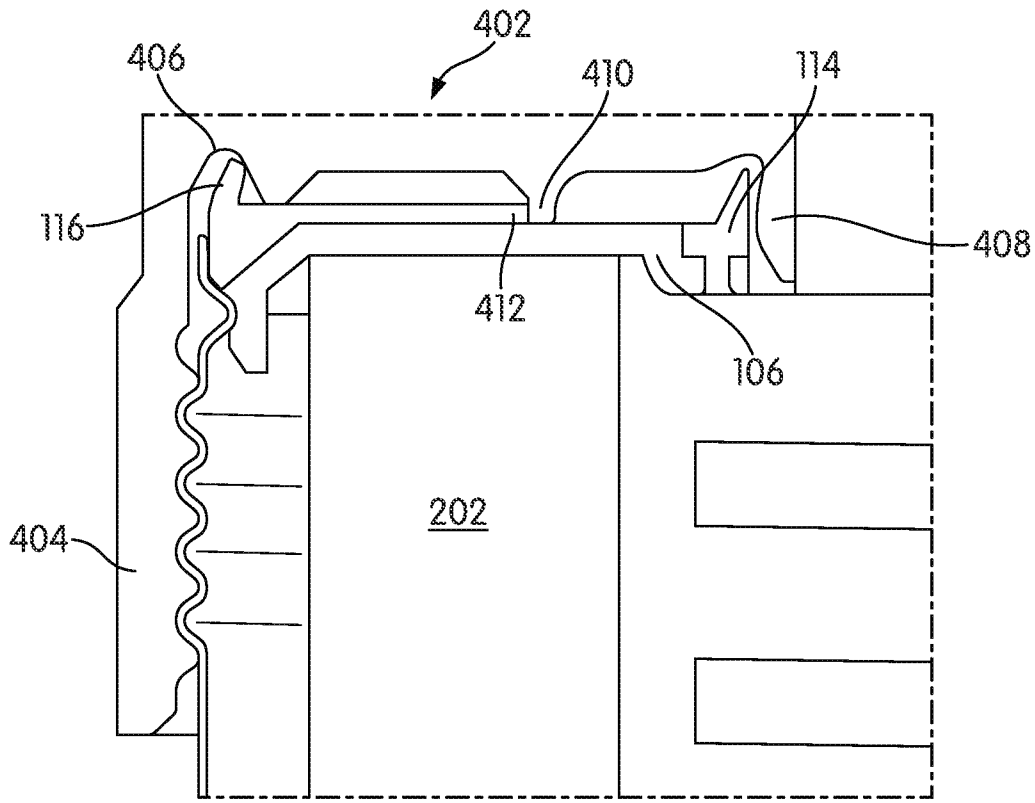
406
402
410
114
116
408
412
106
202
404

FIG. 4

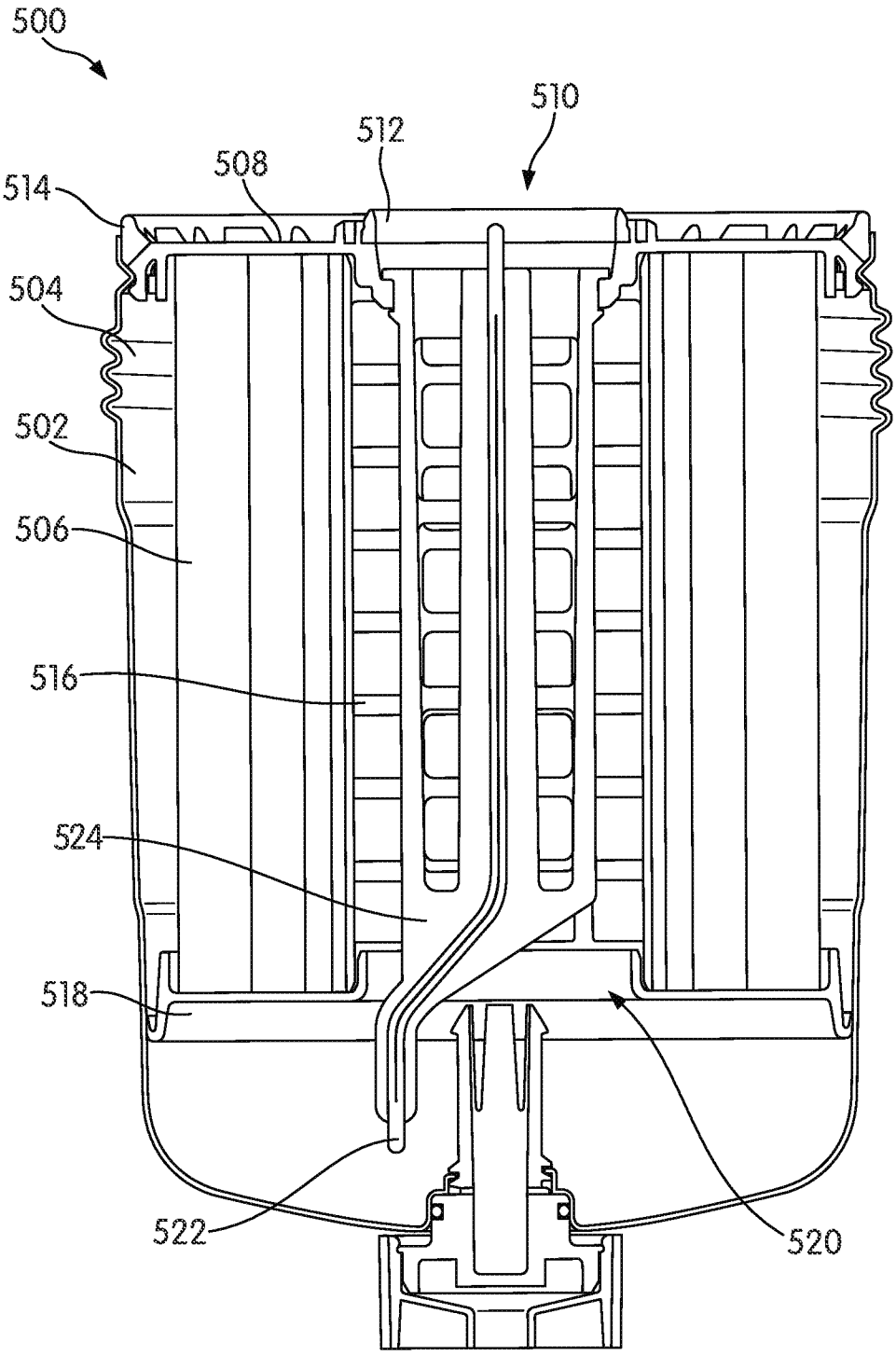

FIG. 5

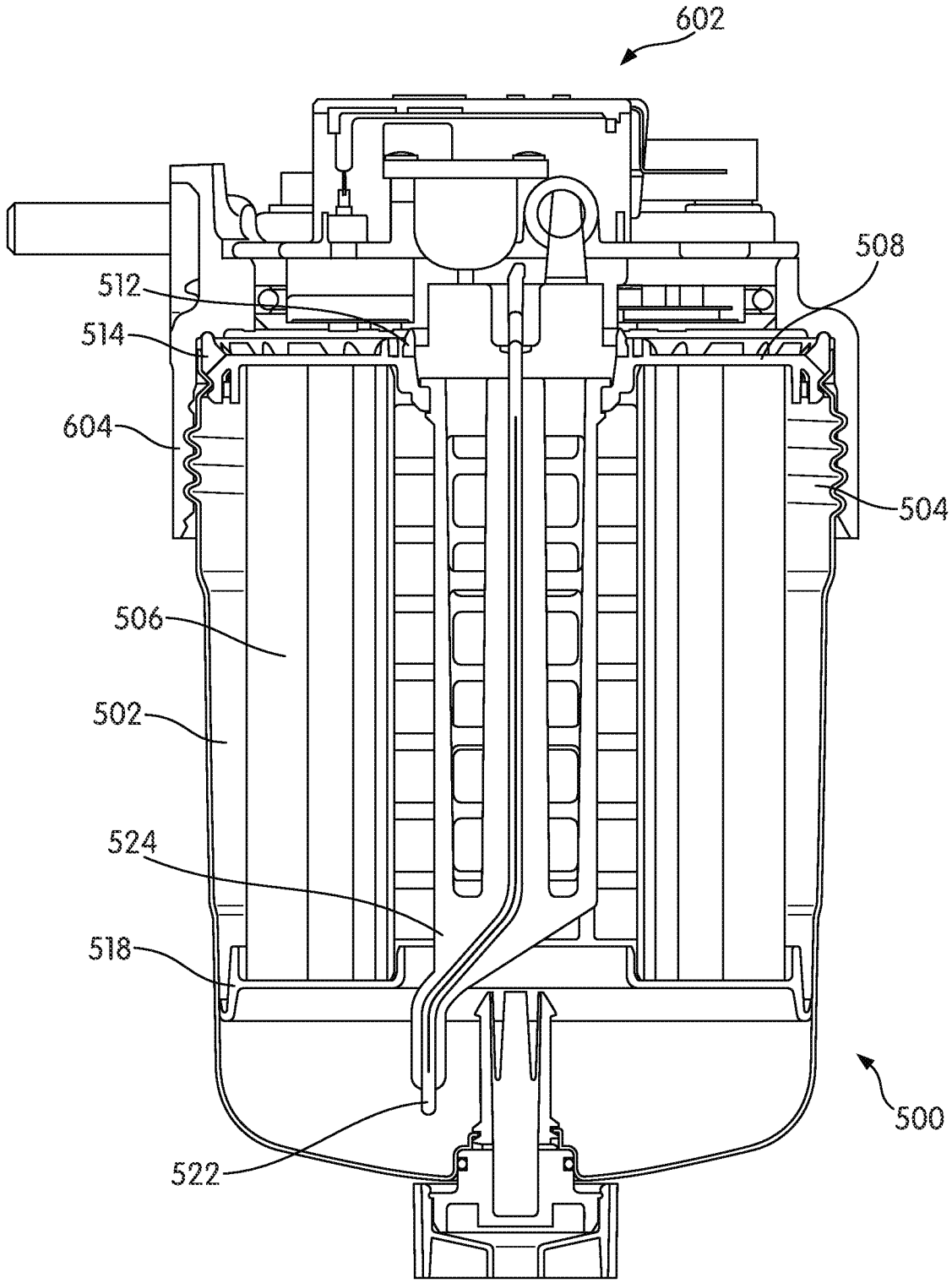

FIG. 6

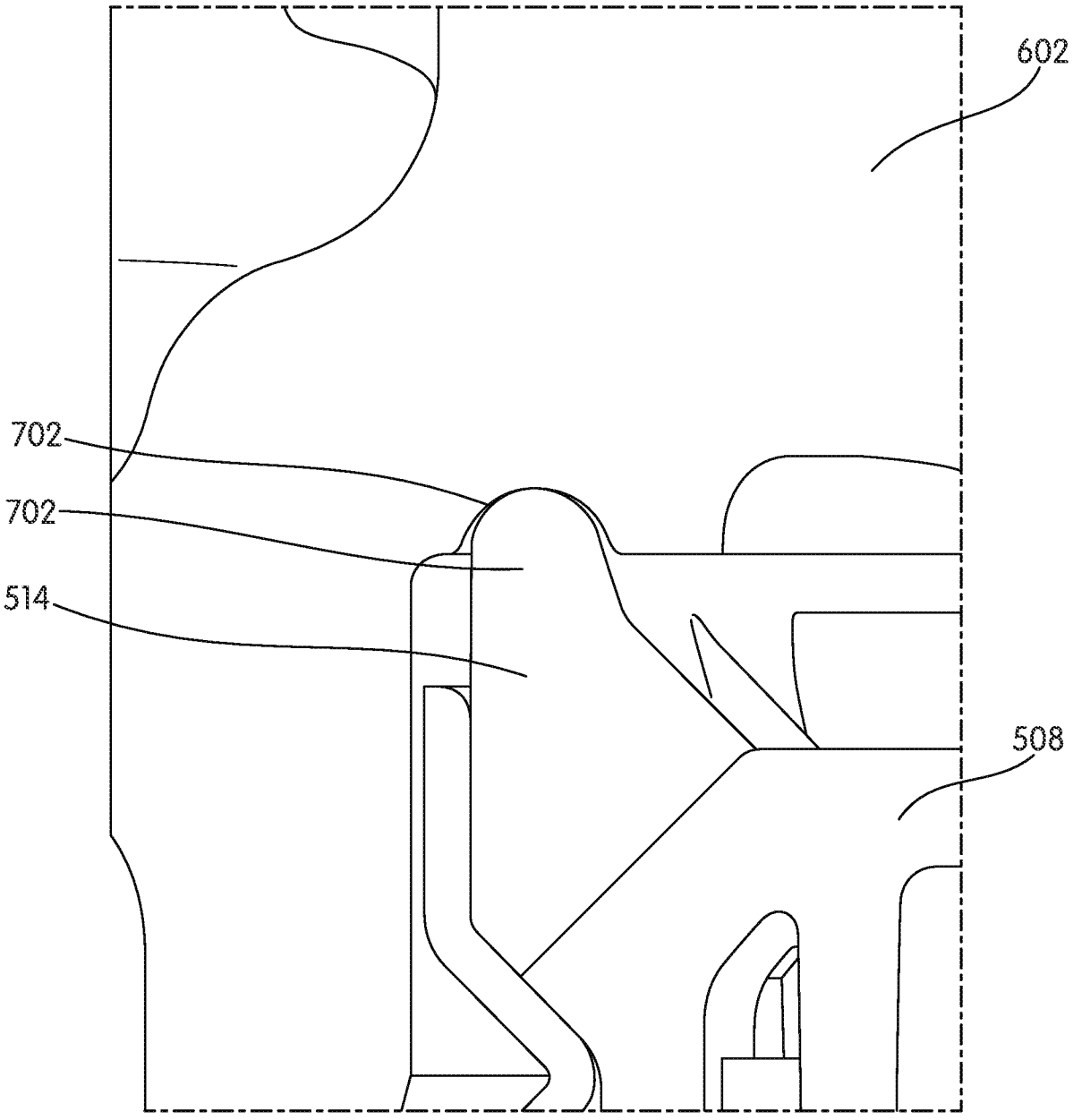

FIG. 7

INTERNATIONAL SEARCH REPORT

International application No.
PCT/US15/54652

A. CLASSIFICATION OF SUBJECT MATTER
IPC(8) - B01D 27/00, 27/08, 35/30 (2015.01)
CPC - B01D 27/08; Y10S 210/17
According to International Patent Classification (IPC) or to both national classification and IPC

B. FIELDS SEARCHED

Minimum documentation searched (classification system followed by classification symbols)
IPC(8) Classification(s): B01D 27/00, 27/06, 27/08, 27/10, 35/02, 35/30, 37/22 (2015.01)
CPC Classification(s): B01D 27/06, 27/08, 29/21, 35/30, 35/306; Y10S 210/17: USPC Classification(s): 210/232, 440, 443, 444, 450

Documentation searched other than minimum documentation to the extent that such documents are included in the fields searched

Electronic data base consulted during the international search (name of data base and, where practicable, search terms used)
PatSeer (US, EP, WO, JP, DE, GB, CN, FR, KR, ES, AU, IN, CA, INPADOC Data): filter, spin on, thread, seal, sealing ridge, sealing lip, compress, deflect, deform, flex, bend, elastic, pressure, high, positive, negative, suction, vacuum, flow direction, both, either, head

C. DOCUMENTS CONSIDERED TO BE RELEVANT

Category*	Citation of document, with indication, where appropriate, of the relevant passages	Relevant to claim No.
X --- Y	US 2011/0303604 A1 (MCKENZIE D. T.) December 15, 2011; figures 4-7; paragraphs [0024], [0031]	1-7 --- 9
X --- Y	US 2013/0056409 A1 (SAWANT A. I. et al.) March 7, 2013; figures 1, 4; paragraphs [0041], [0050]	1-4, 7, 8 --- 5, 6, 9
Y	US 4,832,844 A (AYERS W. R.) May 23, 1989; figures 1-3; column 1, lines 25-30, column 4, lines 1-10 and 35-45	5, 6
Y	US 2004/0118764 A1 (MILLER T. L. et al.) June 24, 2004; figure 1; paragraphs [0018], [0035]	9
A	US 2008/0237113 A1 (JENSEN R. D.) October 2, 2008; entire document	1-9
A	US 6,554,140 B2 (STEGER T. H. JR. et al.) April 29, 2003; entire document	1-9
A	US 6,045,693 A (MILLER P. D. et al.) April 4, 2000; entire document	1-9
A	US 6,019,229 A (RAO P. B.) February 1, 2000; entire document	1-9
A	US 4,832,844 A (AYERS W. R.) May 23, 1989; entire document	1-9

☐ Further documents are listed in the continuation of Box C. ☐ See patent family annex.

* Special categories of cited documents:
"A" document defining the general state of the art which is not considered to be of particular relevance
"E" earlier application or patent but published on or after the international filing date
"L" document which may throw doubts on priority claim(s) or which is cited to establish the publication date of another citation or other special reason (as specified)
"O" document referring to an oral disclosure, use, exhibition or other means
"P" document published prior to the international filing date but later than the priority date claimed
"T" later document published after the international filing date or priority date and not in conflict with the application but cited to understand the principle or theory underlying the invention
"X" document of particular relevance; the claimed invention cannot be considered novel or cannot be considered to involve an inventive step when the document is taken alone
"Y" document of particular relevance; the claimed invention cannot be considered to involve an inventive step when the document is combined with one or more other such documents, such combination being obvious to a person skilled in the art
"&" document member of the same patent family

Date of the actual completion of the international search	Date of mailing of the international search report
02 December 2015 (02.12.2015)	02 FEB 2016
Name and mailing address of the ISA/ Mail Stop PCT, Attn: ISA/US, Commissioner for Patents P.O. Box 1450, Alexandria, Virginia 22313-1450 Facsimile No. 571-273-8300	Authorized officer Shane Thomas PCT Helpdesk: 571-272-4300 PCT OSP: 571-272-7774

Form PCT/ISA/210 (second sheet) (January 2015)

INTERNATIONAL SEARCH REPORT

International application No.
PCT/US15/54652

Box No. II Observations where certain claims were found unsearchable (Continuation of item 2 of first sheet)

This international search report has not been established in respect of certain claims under Article 17(2)(a) for the following reasons:

1. ☐ Claims Nos.:
because they relate to subject matter not required to be searched by this Authority, namely:

2. ☐ Claims Nos.:
because they relate to parts of the international application that do not comply with the prescribed requirements to such an extent that no meaningful international search can be carried out, specifically:

3. ☐ Claims Nos.:
because they are dependent claims and are not drafted in accordance with the second and third sentences of Rule 6.4(a).

Box No. III Observations where unity of invention is lacking (Continuation of item 3 of first sheet)

This International Searching Authority found multiple inventions in this international application, as follows:

-***-Continued Within the Next Supplemental Box-***-

1. ☐ As all required additional search fees were timely paid by the applicant, this international search report covers all searchable claims.

2. ☐ As all searchable claims could be searched without effort justifying additional fees, this Authority did not invite payment of additional fees.

3. ☐ As only some of the required additional search fees were timely paid by the applicant, this international search report covers only those claims for which fees were paid, specifically claims Nos.:

4. ☒ No required additional search fees were timely paid by the applicant. Consequently, this international search report is restricted to the invention first mentioned in the claims; it is covered by claims Nos.:
Group I: claims 1-9

Remark on Protest

☐ The additional search fees were accompanied by the applicant's protest and, where applicable, the payment of a protest fee.

☐ The additional search fees were accompanied by the applicant's protest but the applicable protest fee was not paid within the time limit specified in the invitation.

☐ No protest accompanied the payment of additional search fees.

INTERNATIONAL SEARCH REPORT
Information on patent family members

International application No.
PCT/US15/54652

-***-Continued from Box No. III Observations where unity of invention is lacking -***-

This application contains the following inventions or groups of inventions which are not so linked as to form a single general inventive concept under PCT Rule 13.1. In order for all inventions to be examined, the appropriate additional examination fees must be paid.

Group I: claims 1-9 are directed toward a filter assembly wherein the seal is configured to seal against the filter mounting head in both suction-side applications and pressure-side applications in filtration systems.

Group II: claims 10-25 are directed toward a filtration system wherein filter element is positioned in a pressure-side application or a suction-side application within the filtration system

The inventions listed as Groups I-II do not relate to a single general inventive concept under PCT Rule 13.1 because, under PCT Rule 13.2, they lack the same or corresponding special technical features for the following reasons.

The special technical features of Group I include when the filter assembly is connected in an installed position to a filter mounting head of a filtration system, the seal is configured to seal against the filter mounting head in both suction-side applications and pressure-side applications in filtration systems (which is not present in Group II).

The special technical features of Group II include a filter mounting head including a circumferential groove; a filter housing coupled to the filter mounting head through a threaded connection, the filter element is positioned in a pressure-side application or a suction-side application within the filtration system; the seal including an sealing ridge that at least partially engages the circumferential groove, wherein a pressure of the fluid flowing through the filtration system bends the outer sealing ridge against an outer surface of the circumferential groove to form a seal or against an inner surface of the circumferential groove to form a seal (which is not present in Group I).

The common technical features of Groups I, II include a filter assembly comprising: a housing having an open end and a closed end; a filter element positioned within the housing and configured to filter a fluid; an endcap positioned adjacent to the open end of the housing, the end cap is coupled to a first end of the filter element; and a seal coupled to the endcap and configured to seal a clean side of the filter element from a dirty side of the filter element when the filter assembly is connected in an installed position to a filter mounting head of a filtration system; and suction-side applications and pressure-side applications.

These common technical features are obvious over: US 4,832,844 A (AYERS): a filter assembly comprising: a housing having an open end (opening in stamping 50) and a closed end (closed end opposite stamping 50); a filter element (28) positioned within the housing and configured to filter a fluid (see abstract), an endcap (42) positioned adjacent to the open end (opening in stamping 50) of the housing, the end cap is coupled to a first end of the filter element (as shown, figure 1); and a seal (44) coupled to the endcap and configured to seal a clean side of the filter element from a dirty side of the filter element (see column 3, lines 25-35); and pressure-side applications (see column 4, lines 40-45). Although Ayers does not disclose suction-side applications, it would have been obvious to one of ordinary skill in the art at the time of the invention that Ayer's filter seal will remain operational regardless of a pressure-side or suction-side application because, as Ayer's discloses, the system's operation depends upon the pressure differential (column 4, lines 40-45) and one of ordinary skill in the art would expect a suction-side application with the same pressure differential to operate in the same fashion in accordance with know principles of fluid dynamics.

Because the common technical features are obvious over AYERS, the inventions are not so linked as to form a single general inventive concept. Therefore, Groups I-II lack unity.