Jan. 6, 1925. 1,521,962

F. M. McCORMACK

COLLAPSIBLE CONTAINER

Filed Dec. 12, 1923

Fig. 6.

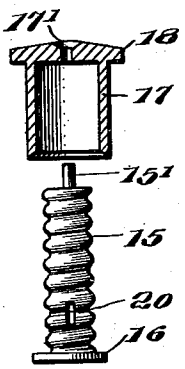

Fig. 1.

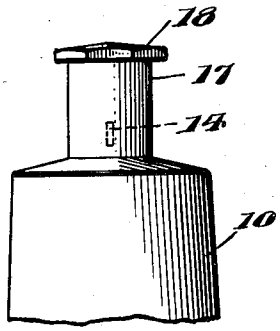

Fig. 2.

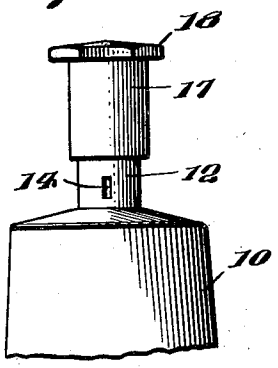

Fig. 4.

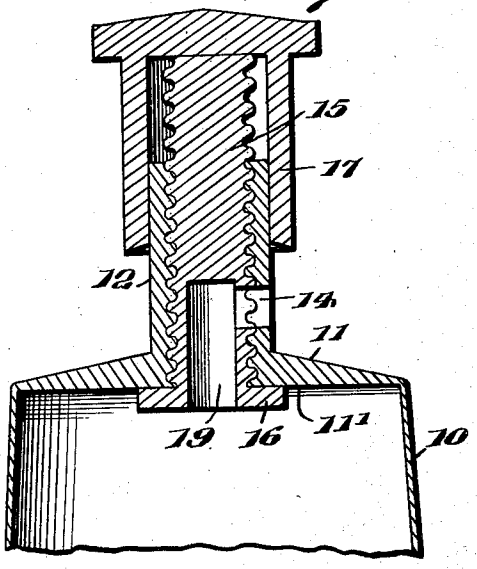

Fig. 3.

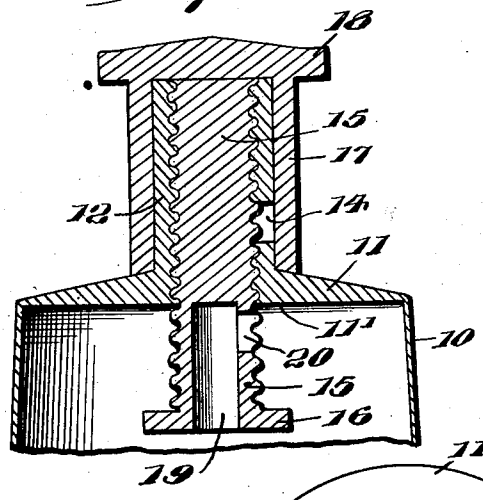

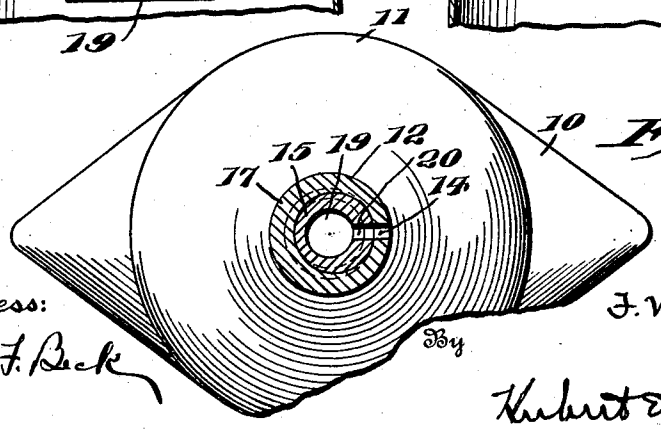

Fig. 5.

Inventor

F. M. McCormack

Witness:

Robert F. Beck

By

Hubert E. Beck

Attorney

Patented Jan. 6, 1925. 1,521,962

UNITED STATES PATENT OFFICE.

FRANK M. McCORMACK, OF OSWEGO, NEW YORK.

COLLAPSIBLE CONTAINER.

Application filed December 12, 1923. Serial No. 680,201.

To all whom it may concern:

Be it known that I, FRANK M. McCORMACK, a citizen of the United States of America, and resident of Oswego, county of Oswego, State of New York, have invented certain new and useful Improvements in and Relating to Collapsible Containers, of which the following is a specification.

This invention relates to certain improvements in collapsible containers; and the nature and objects of the invention will be readily recognized and understood by those skilled in the art in the light of the following explanation and detailed description of the accompanying drawings illustrating what I at present consider to be the preferred embodiments or mechanical expressions of the invention from among various other forms, arrangements, combinations and constructions of which the invention is capable within the spirit and scope thereof.

The invention deals primarily with dispensing containers of the collapsible types, from which the contained material is forced or ejected by pressure applied exteriorly to the collapsible body of a container; and is more particularly directed and relates to the design, construction and mounting of closures for such types of containers.

The collapsible type of dispensing container is peculiarly adapted for use with paste-like or semi-liquid materials, such as tooth pastes, creams, paints, greases and such like materials having similar or equivalent characteristics, and one form of collapsible container in universal use embodies a tubular closed end collapsible body formed with a discharge or dispensing opening in one end thereof, and provided with a removable cap or closure exteriorly fitting over the discharge opening to close the same. However, it is found in the use of this type of collapsible container that the removable cap or closure therefor is frequently misplaced or lost when removed from the container to open the discharge outlet, with resulting loss of and damage to the material in the container. Again, with the general form of end discharge opening, which embodies a neck alined with the axis of the container, after the discharge of material therethrough there is usually a certain quantity of the discharged material which adheres or remains unused at and on the exterior of the opening, so that upon replacing the cap or closure such material remains on the exterior of the tube.

Therefore, one of the main and fundamental objects of the present invention is the provision of a closure for the discharge or dispensing outlet of collapsible containers of the dispensing type which is attached and permanently fixed to the container so that it cannot be readily removed therefrom.

Another main object of the invention is the provision of a cap or closure for the discharge or dispensing outlet of a collapsible container, which is so formed and mounted as to materially reduce the residual deposit of material on and around the discharge outlet after a quantity of material is discharged from the container and the closure is operated to close the outlet.

A further object of the invention is the provision of a collapsible container of the tube type having an end discharge neck formed with a transverse or side discharge and dispensing outlet, provided with a closure forming a cut-off member and interior and exterior closure for said discharge outlet.

With the foregoing general objects, and certain other objects and results in view, which other objects and results will be readily recognized and understood from the following detailed description, the invention consists in certain novel features in construction, and in combination and arrangement of elements, as will be more fully and particularly referred to and specified hereinafter.

Referring to the accompanying drawings:

Fig. 1, is a side elevation of a collapsible tube and closure embodying the invention, with the closure in closed position and a portion only of the tube disclosed.

Fig. 2, is a view similar to Fig. 1 with the closure in open, discharge position.

Fig. 3, is a vertical, longitudinal section through a tube container with the closure in closed position, a portion only of the tube being shown.

Fig. 4 is a vertical longitudinal section similar to Fig. 3, with the closure in open, discharge position.

Fig. 5, is a top elevation of a collapsible

tube of the invention showing a transverse section through the discharge or dispensing neck and closure therefor.

Fig. 6 is a view in elevation and vertical section of one manner of applying the cap to the screw plug, the cap and plug being shown in dis-assembled relation.

The embodiment of the invention disclosed in the accompanying drawings is illustrated, purely by way of example and not of limitation, as applied to and incorporated in a dispensing container of the collapsible tube type such as generally familiar and universally employed for tooth pastes and the like. However, as will readily appear to those skilled in the art, the invention is not limited to application to such type of collapsible tube, as various features thereof are capable of application to other types of dispensing containers generally. The illustrated example is selected and presented because the problems solved and the disadvantages overcome by the invention are encountered in an accentuated degree, and hence serve to more clearly bring forth and present the principles and various features of the invention.

In the drawings, a portion of a collapsible tube 10 of the usual or any other desired type is shown, and embodies the usual container body formed of a readily bendable or flexible material, and formed at the discharge or dispensing end thereof with an end wall 11. The end wall 11 of the tube 10 is provided with an integral outwardly extending neck 12 disposed longitudinally of and axially alined with respect to the tube 10, and the neck 11 is provided with a longitudinal bore or passage therethrough in communication with and opening into the tube 10, in the usual manner familiar in this art. In the present example the end wall is outwardly and centrally sloped or inclined to the exterior of the neck 12 and thus is centrally thickened with the inner face or surface thereof disposed in plane to present the flat inner face of surface 11′, as will be clear by reference to Figs. 3 and 4 of the drawings, although the invention is not limited to such formation of the end wall 11.

According to the illustrated example of the invention the tubular discharge or dispensing neck 12 is interiorly screw threaded and is provided adjacent the end wall 11 with a transverse rectangular discharge opening or outlet 14 through a side wall thereof. An exteriorly screw threaded plug 15 is rotatably mounted in and extending through the neck 12 with the exterior threads thereof operatively engaged with the interior threads of the tube neck, so that the plug 15 can be screwed inwardly and outwardly in the neck 12. The plug 15 is of greater length than the neck 12 and is provided at the inner end thereof within the tube 10, with a flange 16 extending outwardly and radially therefrom and therearound. This flange 16 forms a stop adapted to engage the shoulder formed around the inner end of the neck bore or passage by the flat inner surface 11′ of the end wall 11, to limit outward movement of the screw plug 15 in the neck 12, as shown in Fig. 4 of the drawings.

A slip cap or hood 17 formed with an enlarged manual operating head 18, is mounted on and fixed to the outer end of the plug 15 for movement therewith. The slip cap or hood 17 is formed with an internal diameter to receive and form a running or sliding fit with the smooth exterior surface of the discharge or dispensing neck 12 of the tube 10, and is mounted on and fixed to the end of the plug 15 which extends upwardly thereinto and concentric therewith, at the inner side of the operating head 18. Thus, the slip cap 17 is so mounted and positioned on the plug 15 with respect to the neck 12, that the latter is received and fits between the inner surface of the wall of the cap and the screw plug 15, and by rotating the cap 17 by the head 18, the plug 15 and cap can be moved inwardly or outwardly on the neck 12 of the tube 10, due to the engaged threads of the neck and plug. The slip cap 17 is of such a length that with the plug 15 screwed inwardly into the tube 10, the inner edge thereof bears against the outer surface of the end wall 11 and the cap 17 completely covers the neck 12 and discharge opening 14 therein, with the head 18 of the cap bearing against the upper end edge of the neck 12, and the plug 15 extended a distance inwardly into the tube 10. This position of the plug and cap on the neck 12 is shown in Figs. 1 and 3 of the drawings. With the plug 15 screwed outwardly through the neck 12, the cap 17 is moved outwardly thereon and exposes a portion of the neck and the discharge opening 14, the flange 16 engaging the inner side of wall 11 and limiting outward movement of the plug and cap or removal thereof from the tube.

The inner end of the plug 15 is formed with an axial bore extending a distance thereinto and providing a discharge or dispensing chamber 19 at the inner end thereof opening into and in communication with the tube 10. A transverse discharge outlet or port 20 is provided through a side of the plug 15 adjacent the inner end of the chamber 19 and in communication therewith, thus forming a discharge outlet or port from the chamber 19. The chamber 19 extends a distance inwardly into the inner end of the plug 15 and the discharge outlet or port 20 is so positioned in the plug that with the plug 15 and cap 17 moved to their limit of

outward movement the outlet 20 is alined with the outlet or port 14 through the side of the neck 12, and a passage is thus formed from the chamber 19 through the plug and neck to the exterior of the tube and transversely of the longitudinal axis thereof. This alinement of the outlets or ports 20 and 14 is clearly shown in Fig. 4 of the accompanying drawings. With the plug and cap moved inwardly to their limit of movement the slip cap 17 closes or covers the outlet or port 14 at the exterior thereof and the outlet or port 20 in the plug is moved to position out of alinement therewith, with the body of the plug closing the inner or inlet side of the opening 14.

The foregoing construction and mounting of the closure of the invention can be assembled in any suitable or desired manner. For example, the screw plug can be mounted in the tube neck from the lower open end of a tube 10 before filling and sealing thereof, and rotated outwardly to extreme position therein with the flange 16 bearing against the wall 11. In this position of the plug 15, the alined outlets or ports 14 and 20 can be cut therethrough in proper position to form the discharge passage communicating with the chamber 19 in the plug, thus assuring proper alinement of the outlets 14 and 20 when the closure is rotated to open position. The slip cap or hood 17 can then be suitably secured on and fixed to the upper end of the plug 15, by soldering, riveting or the like. One possible manner of securing the slip cap or hood 17 to the end of the plug 15 as a practically integral and inseparable part thereof is shown in Fig. 6 of the drawings, in which the end of the plug is provided with a lug or pin 15′ adapted to extend through a bore 17′ formed in the head 18 of cap 17. By spilling the end of the pin 15′, the cap 17 can be rigidly secured and fixed to the screw plug 15 as will be readily apparent.

In operation and use of the collapsible tube 10 formed and provided with the closure embodying the invention as above described, in order to open the tube for discharge of material therefrom, the slip cap or hood 17 is grasped by the head 18 and rotated in the proper direction to cause the screw plug 15 and the cap to move outwardly until the flange 16 engages the inner surface or shoulder 11′ of the end wall 11 and stops further outward movement of the plug and cap, at which position the outlets or ports 14 and 20 are alined to form the discharge passage from the tube (see Fig. 4). Then by applying pressure externally to the tube body 10 in the usual manner the material therein is forced into the chamber 19 of the screw plug and discharge therefrom through the passage formed through the side of the plug 15 and neck 12 by the alined bores 20 and 14, the slip cap 17 being in position removed from and exposing the neck outlet 14. By the provision of the discharge passage formed by the alined outlets or ports 14 and 20, disposed transversely to the axis of the tube, the tendency of the material to flow or discharge from the tube after release of pressure is materially reduced due to the change in direction, as the main tendency of the material is to continue moving or flowing in a direction longitudinally or axially of the tube.

After the required quantity of material is discharged, the tube is closed by rotating the cap and plug in the proper direction to move the same inwardly on the tube neck 12 until the inner edge of the cap 17 engages wall 11. During movement of the cap 17 inwardly on the neck 12 it functions as a cut-off for the opening or port 14, and in inward position completely covers and closes the same. Similarly in closed position, the plug 15 completely covers and closes the inner end of this outlet 14 and the outlet or port 20 is moved inwardly out of alinement with the outlet 14, thus effectively closing the tube and preventing discharge therefrom. The operation of the plug 15 and the slip cap 17 functioning as a cut off in closing the tube materially reduces any residual deposit and collection of material around the neck of the tube after discharge therefrom.

The closure embodying the foregoing features of the invention is effectively attached to and cannot be removed therefrom, due to the flange 16 on the inner end and the slip cap 17 on the outer end, of the plug 15. By the construction and mounting of the invention it is not necessary to remove the closure to open the tube, and the possibility of misplacing or losing a tube closure is eliminated.

It is evident that various changes, modifications and variations might be resorted to without departing from the spirit and scope of my invention, and hence I do not desire to limit myself to the exact disclosures hereof.

Desiring to protect my invention in the broadest manner legally possible, what I claim is:

1. In a dispensing container, a tubular discharge neck internally screw threaded and formed with a transverse discharge port therethrough, an externally threaded plug rotatably mounted in said neck and extending into the container, a slip cap carried by and movable with said plug and extending over and surrounding said neck, the said cap covering said neck and transverse discharge port with the port moved inwardly in the neck and exposing said discharge port with the plug moved outwardly in the neck.

2. In a dispensing container, a tubular discharge neck internally screw threaded and formed with a transverse discharge port therethrough, an externally threaded plug rotatably mounted in said neck and extending into the container, a slip cap fixed and movable with said plug and extending over and surrounding said neck, said cap covering and closing the discharge port in the neck with the plug moved inwardly and exposing said port with the plug moved outwardly in the neck, and the said plug formed with a discharge passage adapted to aline with the discharge port in the neck when said plug and cap are in outward position.

3. In a dispensing container, a tubular discharge neck internally screw threaded and formed with a transverse discharge port therethrough, an externally screw threaded plug rotatably mounted in said neck for longitudinal movement thereof, a slip cap on the outer end of said plug for movement therewith and fitting over and surrounding said neck, the said cap covering said neck and discharge port with the plug moved inwardly in the neck and exposing said port with the plug and cap moved outwardly, and a flange on the inner end of said plug adapted to engage the container and form a stop limiting outward movement of the plug and cap, the said plug formed with a discharge passage therethrough for alinement with the neck discharge port in outward position of the plug and cap.

4. In a dispensing container, a tubular discharge neck formed with a transverse discharge port therethrough, a plug mounted in said neck for movement longitudinally thereof, a slip cap fixed rigidly on the outer end of said plug fitting over and covering said neck with the plug in position moved inwardly, and said cap adapted to expose said discharge port with the plug moved outwardly through the neck.

5. In a dispensing container, a tubular discharge neck formed with a transverse discharge port therethrough, a plug mounted in and extending through said neck for movement longitudinally thereof, a slip cap fixed on the said plug adapted to fit over and receive said neck, the said cap in inward position of the plug covering the neck and closing said discharge port, and in outward position of the plug said cap exposing said port for discharge therethrough, means carried by the plug preventing removal of said cap and plug from the container, and the said plug formed with a discharge passage therethrough aligned with the neck discharge port in outward position of the plug.

6. In a dispensing container having a tubular discharge neck, a discharge port formed transversely through said neck, a plug mounted in and extending through said neck, a slip cap fixed on said plug fitting over the exterior of and receiving said neck, the said cap in inward position of said plug covering the neck and closing the exterior of the discharge port with the plug covering the inner end of the port, and in outward position of the plug said cap exposing said port and the said plug permitting discharge therethrough from the container.

7. In a dispensing container, a tubular discharge neck formed with a discharge port through a side wall thereof, a plug mounted in and extending through said neck for movement longitudinally thereof, a slip cap carried by said plug and fitting over and covering the exterior of said neck, the inner end of said plug formed with a chamber therein and a transverse discharge outlet therefrom, said cap covering the neck and exterior of said discharge port and said plug closing the inner end of said port with the plug and cap in inward position, and the cap exposing the neck discharge port and the plug discharge outlet alined with said neck discharge port when the plug and cap are in outward position.

8. In a dispensing container of the collapsible type, a tubular discharge neck having a transverse discharge port therein, a plug mounted in and extending through said neck for movement longitudinally thereof, a slip cap fitting over and surrounding the exterior of said neck and movable longitudinally thereon with and rigidly connected to said plug, said plug and cap exposing and opening the inner and outer ends of said discharge port with the plug and cap in outward position, and when moved inwardly of the neck forming inner and outer cut offs for said discharge port, the said cap covering and closing said discharge port in inward position on the neck, and the said plug formed with a discharge passage alined with the neck discharge port in outward position of the plug.

9. In a dispensing container, a tubular discharge neck having a transverse discharge port, a plug mounted in and extending through said neck for movement longitudinally thereof, and a wall extending inwardly from the outer end of, concentric with and spaced from said plug, said wall extending over and surrounding the exterior of said neck, and the said wall covering and closing the discharge port with the plug in inward position, and exposing and opening said discharge port for discharge therethrough with the plug in outward position.

10. In a dispensing container, a tubular discharge neck having a transverse discharge port therefrom, a plug mounted in and extending through said neck for movement longitudinally thereof, and a cut off fixed to and carried by the outer end of said plug and adapted to cover and close

said discharge port with the plug in inward position in the neck and to expose and open said port when the plug is moved outwardly in the neck.

11. In a dispensing container, an internally screw threaded tubular discharge neck having a transverse discharge port therefrom, an externally screw threaded plug mounted in and extending through said neck for movement longitudinally thereof by rotation of the plug, said plug formed with a chamber in the inner end thereof in communication with the container and having a transverse discharge outlet therefrom, a slip cap rigidly connected to said plug at the outer end thereof and adapted to fit over the exterior of and receive said neck, said cap formed with a manual operating head for rotating the cap and plug, said cap in inward position of said plug covering said neck and closing the discharge port therefrom, and in outward position exposing said port with the discharge outlet from the chamber of the plug alined with said neck discharge port, and a flange on the inner end of said plug for engaging the container to limit outward movement and prevent removal of said plug from the container.

Signed at Oswego, Oswego County, State of New York, this 10th day of December, 1923.

FRANK M. McCORMACK.