(12) INTERNATIONAL APPLICATION PUBLISHED UNDER THE PATENT COOPERATION TREATY (PCT)

(19) World Intellectual Property Organization
International Bureau

(43) International Publication Date
21 April 2016 (21.04.2016)

WIPO | PCT

(10) International Publication Number
WO 2016/061458 A1

(51) International Patent Classification:
E21B 10/42 (2006.01) *E21B 10/62* (2006.01)
E21B 10/43 (2006.01)

(21) International Application Number:
PCT/US2015/055944

(22) International Filing Date:
16 October 2015 (16.10.2015)

(25) Filing Language: English

(26) Publication Language: English

(30) Priority Data:
14/516,340 16 October 2014 (16.10.2014) US
14/864,436 24 September 2015 (24.09.2015) US

(71) Applicant: **BAKER HUGHES INCORPORATED** [US/US]; P.O. Box 4740, Houston, TX 77210-4740 (US).

(72) Inventors: **JAIN, Jayesh, R.**; 51 South Lace Arbor Drive, The Woodlands, TX 77382 (US). **BAXTER, Benjamin**; 35 Llama Ct., Reno, NV 89511 (US). **VEMPATI, Chaitanya, K.**; 130 Autumn Forest Ln., Conroe, TX 77384 (US). **RADFORD, Steven, R.**; 187 N. Millport Circle, The Woodlands, TX 77382 (US). **PETERS, Volker**; Knokenriehe 14, 29342 Wienhausen (DE). **RICKS, Gregory, L.**; 31319 Brighton Brook Lane, Spring, TX 77386 (US). **BILEN, Juan, Miguel**; 27 Willow Point Place, The Woodlands, TX 77382 (US). **STIBBE, Holger**; 8231 Shore Grove Drive, Humble, TX 77346 (US). **CURRY, David, A.**; Appletrees, Askett, Princes Risborough Buckinham HP27PLT (GB).

(74) Agents: **WELBORN, Brian, S.** et al.; Baker Hughes Incorporated, Intellectual Property Counsel, P.O. Box 4740, Houston, TX 77210-4740 (US).

(81) Designated States *(unless otherwise indicated, for every kind of national protection available)*: AE, AG, AL, AM, AO, AT, AU, AZ, BA, BB, BG, BH, BN, BR, BW, BY, BZ, CA, CH, CL, CN, CO, CR, CU, CZ, DE, DK, DM, DO, DZ, EC, EE, EG, ES, FI, GB, GD, GE, GH, GM, GT, HN, HR, HU, ID, IL, IN, IR, IS, JP, KE, KG, KN, KP, KR, KZ, LA, LC, LK, LR, LS, LU, LY, MA, MD, ME, MG, MK, MN, MW, MX, MY, MZ, NA, NG, NI, NO, NZ, OM, PA, PE, PG, PH, PL, PT, QA, RO, RS, RU, RW, SA, SC, SD, SE, SG, SK, SL, SM, ST, SV, SY, TH, TJ, TM, TN, TR, TT, TZ, UA, UG, US, UZ, VC, VN, ZA, ZM, ZW.

[Continued on next page]

(54) Title: DRILL BIT WITH SELF-ADJUSTING PADS

(57) Abstract: In one aspect, a drill bit is disclosed, including: a bit body; a pad associated with the bit body; a rate control device coupled to the pad that extends from a bit surface at a first rate and retracts from an extended position to a retracted position at a second rate in response to external force applied onto the pad, the rate control device including: a piston for applying a force on the pad; a biasing member that applies a force on the piston to extend the pad at the first rate; a fluid chamber associated with the piston; and a pressure management device for controlling a fluid pressure within the fluid chamber.

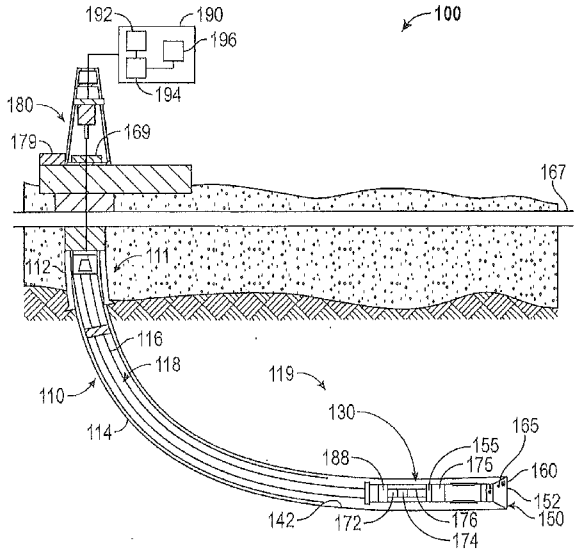

FIG. 1

WO 2016/061458 A1

(84) **Designated States** *(unless otherwise indicated, for every kind of regional protection available)*: ARIPO (BW, GH, GM, KE, LR, LS, MW, MZ, NA, RW, SD, SL, ST, SZ, TZ, UG, ZM, ZW), Eurasian (AM, AZ, BY, KG, KZ, RU, TJ, TM), European (AL, AT, BE, BG, CH, CY, CZ, DE, DK, EE, ES, FI, FR, GB, GR, HR, HU, IE, IS, IT, LT, LU, LV, MC, MK, MT, NL, NO, PL, PT, RO, RS, SE, SI, SK, SM, TR), OAPI (BF, BJ, CF, CG, CI, CM, GA, GN, GQ, GW, KM, ML, MR, NE, SN, TD, TG).

Declarations under Rule 4.17:

— *as to applicant's entitlement to apply for and be granted a patent (Rule 4.17(ii))*

Published:

— *with international search report (Art. 21(3))*

DRILL BIT WITH SELF-ADJUSTING PADS

PRIORITY CLAIM

This application claims the benefit of the filing date of United States Patent Application Serial Number 14/864,436, filed September 24, 2015, for "DRILL BIT WITH SELF-ADJUSTING PADS," which is a continuation of U.S. Patent Application Serial No. 14/516,340, filed October 16, 2014, which is a continuation-in-part of U.S. Non-Provisional Patent Application Serial No 13/864,926, filed April 17, 2013, each of which is incorporated herein by reference in its entirety.

TECHNICAL FIELD

This disclosure relates generally to drill bits and systems that utilize same for drilling wellbores.

BACKGROUND

Oil wells (also referred to as "wellbores" or "boreholes") are drilled with a drill string that includes a tubular member having a drilling assembly (also referred to as the "bottomhole assembly" or "BHA"). The BHA typically includes devices and sensors that provide information relating to a variety of parameters relating to the drilling operations ("drilling parameters"), behavior of the BHA ("BHA parameters") and parameters relating to the formation surrounding the wellbore ("formation parameters"). A drill bit attached to the bottom end of the BHA is rotated by rotating the drill string and/or by a drilling motor (also referred to as a "mud motor") in the BHA to disintegrate the rock formation to drill the wellbore. A large number of wellbores are drilled along contoured trajectories. For example, a single wellbore may include one or more vertical sections, deviated sections and horizontal sections through differing types of rock formations. When drilling progresses from a soft formation, such as sand, to a hard formation, such as shale, or vice versa, the rate of penetration (ROP) of the drill changes and can cause (decreases or increases) excessive fluctuations or vibration (lateral or torsional) in the drill bit. The ROP is typically controlled by controlling the

weight-on-bit (WOB) and rotational speed (revolutions per minute or "RPM") of the drill bit so as to control drill bit fluctuations. The WOB is controlled by controlling the hook load at the surface and the RPM is controlled by controlling the drill string rotation at the surface and/or by controlling the drilling motor speed in the BHA. Controlling the drill bit fluctuations and ROP by such methods requires the drilling system or operator to take actions at the surface. The impact of such surface actions on the drill bit fluctuations is not substantially immediate. Drill bit aggressiveness contributes to the vibration, whirl and stick-slip for a given WOB and drill bit rotational speed. "Depth of Cut" (DOC) of a drill bit, generally defined as "the distance the drill bit advances along axially into the formation in one revolution," is a contributing factor relating to the drill bit aggressiveness. Controlling DOC can provide smoother borehole, avoid premature damage to the cutters and prolong operating life of the drill bit.

The disclosure herein provides a drill bit and drilling systems using the same configured to control the rate of change of instantaneous DOC of a drill bit during drilling of a wellbore.

DISCLOSURE

In one aspect, a drill bit is disclosed, including: a bit body; a pad associated with the bit body; a rate control device coupled to the pad that extends from a bit surface at a first rate and retracts from an extended position to a retracted position at a second rate in response to external force applied onto the pad, the rate control device including: a piston for applying a force on the pad; a biasing member that applies a force on the piston to extend the pad at the first rate; a fluid chamber associated with the piston; and a pressure management device for controlling a fluid pressure within the fluid chamber.

In another aspect, a method of drilling a wellbore is disclosed, including: providing a drill bit including a bit body, a pad associated with the bit body, and a rate control device; conveying a drill string into a formation, the drill string having a drill bit at the end thereof; selectively extending the pad from a bit surface at a first rate via the

rate control device; selectively retracting from an extended position to a retracted position at a second rate in response to external force applied onto the pad via the rate control device, the rate control device including: a piston for applying a force on the pad; a biasing member that applies a force on the piston to extend the pad at the first rate; a fluid chamber associated with the piston; and controlling a fluid pressure within the fluid chamber via a pressure management device; and drilling the wellbore using the drill string.

In another aspect, a system for drilling a wellbore is disclosed, including: a drilling assembly having a drill bit, the drill bit including: a bit body; a pad associated with the bit body; a rate control device coupled to the pad that extends from a bit surface at a first rate and retracts from an extended position to a retracted position at a second rate in response to external force applied onto the pad, the rate control device including: a piston for applying a force on the pad; a biasing member that applies a force on the piston to extend the pad at the first rate; a fluid chamber associated with the piston; and a pressure management device for controlling a fluid pressure within the fluid chamber.

In another aspect, a drill bit is disclosed, including: a bit body; a pad associated with the bit body; a rate control device coupled to the pad that extends from a bit surface at a first rate and retracts from an extended position to a retracted position at a second rate in response to an external force applied, the rate control device including: a piston for applying a force on the pad; a biasing member that applies a force on the piston to expose the pad at the first rate; and a rotary device that applies a force on the piston to hide the pad at the second rate.

Examples of certain features of the apparatus and method disclosed herein are summarized rather broadly in order that the detailed description thereof that follows may be better understood. There are, of course, additional features of the apparatus and method disclosed hereinafter that will form the subject of the claims appended hereto.

BRIEF DESCRIPTION OF THE DRAWINGS

The disclosure herein is best understood with reference to the accompanying figures, wherein like numerals have generally been assigned to like elements and in which:

FIG. 1 is a schematic diagram of an exemplary drilling system that includes a drill string that has a drill bit made according to one embodiment of the disclosure;

FIG. 2 shows a partial cross-sectional view of an exemplary drill bit with a pad and a rate control device for controlling the rates of extending and retracting the pad from a drill bit surface, according to one embodiment of the disclosure;

FIG. 3 shows an alternative embodiment of the rate control device that operates the pad via a hydraulic line;

FIG. 4 shows an embodiment of a rate control device configured to operate multiple pads;

FIG. 5 shows placement of a rate control device of FIG. 3 in the crown section of the drill bit;

FIG. 6 shows placement of a rate control device of in fluid passage or flow path of the drill bit;

FIG. 7 shows a drill bit, wherein the rate control device and the pad are placed on an outside surface of the drill bit;

FIG. 8A shows an embodiment of a rate control device with a multistage orifice;

FIG. 8B shows an embodiment of a multistage orifice for use with the rate control device illustrated in FIG. 8A;

FIG. 9 shows an embodiment of a rate control device with a high precision gap;

FIG. 10 shows an embodiment of a rate control device configured to operate multiple pads;

FIG. 11 shows an embodiment of a rate control device configured to operate extending from the center of the bit;

FIG. 12 shows an embodiment of a rate control device with a multi-wall chamber;

FIG. 13 shows an embodiment of a rate control device with a compensated piston;

FIG. 14 shows an embodiment of a rate control device with a rotary device; and

FIG. 15 shows an alternate embodiment of a rate control device.

MODE(S) FOR CARRYING OUT THE INVENTION

FIG. 1 is a schematic diagram of an exemplary drilling system 100 that may utilize drill bits made according to the disclosure herein. FIG. 1 shows a wellbore 110 having an upper section 111 with a casing 112 installed therein and a lower section 114 being drilled with a drill string 118. The drill string 118 is shown to include a tubular member 116 with a BHA 130 attached at its bottom end. The tubular member 116 may be made up by joining drill pipe sections or it may be a coiled-tubing. A drill bit 150 is shown attached to the bottom end of the BHA 130 for disintegrating the rock formation 119 to drill the wellbore 110 of a selected diameter.

Drill string 118 is shown conveyed into the wellbore 110 from a rig 180 at the surface 167. The exemplary rig 180 shown is a land rig for ease of explanation. The apparatus and methods disclosed herein may also be utilized with an offshore rig used for drilling wellbores under water. A rotary table 169 or a top drive (not shown) coupled to the drill string 118 may be utilized to rotate the drill string 118 to rotate the BHA 130 and thus the drill bit 150 to drill the wellbore 110. A drilling motor 155 (also referred to as the "mud motor") may be provided in the BHA 130 to rotate the drill bit 150. The drilling motor 155 may be used alone to rotate the drill bit 150 or to superimpose the rotation of the drill bit by the drill string 118. A control unit (or controller) 190, which may be a computer-based unit, may be placed at the surface 167 to receive and process data transmitted by the sensors in the drill bit 150 and the sensors in the BHA 130, and to control selected operations of the various devices and sensors in the BHA 130. The surface controller 190, in one embodiment, may include a processor 192, a data storage device (or a computer-readable medium) 194 for storing data, algorithms and computer programs 196. The data storage device 194 may be any suitable device, including, but not limited to, a read-only memory (ROM), a random-access memory (RAM), a flash memory, a magnetic tape, a hard disk and an optical disk. During drilling, a drilling fluid 179 from a source thereof is pumped under

pressure into the tubular member 116. The drilling fluid discharges at the bottom of the drill bit 150 and returns to the surface via the annular space (also referred as the "annulus") between the drill string 118 and the inside wall 142 of the wellbore 110.

The BHA 130 may further include one or more downhole sensors (collectively designated by numeral 175). The sensors 175 may include any number and type of sensors, including, but not limited to, sensors generally known as the measurement-while-drilling (MWD) sensors or the logging-while-drilling (LWD) sensors, and sensors that provide information relating to the behavior of the BHA 130, such as drill bit rotation (revolutions per minute or "RPM"), tool face, pressure, vibration, whirl, bending, and stick-slip. The BHA 130 may further include a control unit (or controller) 170 that controls the operation of one or more devices and sensors in the BHA 130. The controller 170 may include, among other things, circuits to process the signals from sensor 175, a processor 172 (such as a microprocessor) to process the digitized signals, a data storage device 174 (such as a solid-state-memory), and a computer program 176. The processor 172 may process the digitized signals, and control downhole devices and sensors, and communicate data information with the controller 190 via a two-way telemetry unit 188.

Still referring to FIG. 1, the drill bit 150 includes a face section (or bottom section) 152. The face section 152 or a portion thereof faces the formation in front of the drill bit or the wellbore bottom during drilling. The drill bit 150, in one aspect, includes one or more pads 160 that may be extended and retracted from a selected surface of the drill bit 150. The pads 160 are also referred to herein as the "extensible pads," "extendable pads," or "adjustable pads." A suitable actuation device (or actuation unit) 165 in the drill bit 150 may be utilized to extend and retract one or more pads from a drill bit surface during drilling of the wellbore 110. In one aspect, the actuation device 165 may control the rate of extension and retraction of the pad 160. The actuation device is also referred to as a "rate control device" or "rate controller." In another aspect, the actuation device is a passive device that automatically adjusts or self-adjusts the extension and retraction of the pad 160 based on or in response to the force or pressure applied to the pad 160 during drilling. In certain embodiments,

actuation device 165 and pad 160 are actuated by contact with the formation. Further, a substantial force on pads 160 is experienced when the depth of cut of drill bit 150 is changed rapidly. Accordingly, it is desirable for actuation mechanism 165 to resist changes to the depth of cut. In certain embodiments, actuation mechanism 165 will increase the weight on bit at a given depth of cut. In other embodiments, actuation mechanism 165 will reduce the depth of cut for a given weight on bit. The rate of extension and retraction of the pad may be preset as described in more detail in reference to FIGS. 2-4.

FIG. 2 shows an exemplary drill bit 200 made according to one embodiment of the disclosure. In an exemplary embodiment, the drill bit 200 is a polycrystalline diamond compact (PDC) bit having a bit body 201 that includes a neck or neck section 210, a shank 220 and a crown or crown section 230. In other embodiments, the drill bit 200 is any suitable drill bit or formation removal device for use in a formation. In other embodiments, drill bit 200 is any suitable downhole rotary tool. The neck 210 has a tapered upper end 212 having threads 212a thereon for connecting the drill bit 200 to a box end of the drilling assembly 130 (FIG. 1). The shank 220 has a lower vertical or straight section 222 that is fixedly connected to the crown 230 at a joint 224. The crown 230 includes a face or face section 232 that faces the formation during drilling. The crown 230 includes a number of blades, such as blades 234a, 234b, etc. A typical PDC bit includes 3-7 blades. Each blade has a face (also referred to as a "face section") and a side (also referred to as a "side section"). For example, blade 234a has a face 232a and a side 236a, while blade 234b has a face 232b and a side 236b. The sides 236a and 236b extend along the longitudinal or vertical axis 202 of the drill bit 200. Each blade further includes a number of cutters. In the particular embodiment of FIG. 2, blade 234a is shown to include cutters 238a on a portion of the side 236a and cutters 238b along the face 232a while blade 234b is shown to include cutters 239a on the side 239a and cutters 239b on the face 232b.

Still referring to FIG. 2, the drill bit 200 includes one or more elements or members (also referred to herein as pads) that extend and retract from a surface 252 of the drill bit 200. FIG. 2 shows a pad 250 movably placed in a cavity or recess 254 in

the crown section 230. An activation device 260 may be coupled to the pad 250 to extend and retract the pad 250 from a drill bit surface location 252. In one aspect, the activation device 260 controls the rate of extension and retraction of the pad 250. In another aspect, the device 260 extends the pad at a first rate and retracts the pad at a second rate. In embodiments, the first rate and second rate may be the same or different rates. In another aspect, the rate of extension of the pad 250 may be greater than the rate of retraction. As noted above, the device 260 also is referred to herein as a "rate control device" or a "rate controller." In the particular embodiment of the device 260, the pad 250 is directly coupled to the device 260 via a mechanical connection or connecting member 256. In one aspect, the device 260 includes a chamber 270 that houses a double acting reciprocating member, such as a piston 280, that sealingly divides the chamber 270 into a first chamber 272 and a second chamber or reservoir 274. Both chambers 272 and 274 are filled with a hydraulic fluid 278 suitable for downhole use, such as oil. A biasing member, such as a spring 284, in the first chamber 272, applies a selected force on the piston 280 to cause it to move outward. Since the piston 280 is connected to the pad 250, moving the piston outward causes the pad 250 to extend from the surface 252 of the drill bit 200. In one aspect, the chambers 272 and 274 are in fluid communication with each other via a first fluid flow path or flow line 282 and a second fluid flow path or flow line 286. A flow control device, such as a check valve 285, placed in the fluid flow line 282, may be utilized to control the rate of flow of the fluid from chamber 274 to chamber 272. Similarly, another flow control device, such as a check valve 287, placed in fluid flow line 286, may be utilized to control the rate of flow of the fluid 278 from chamber 272 to chamber 274. The flow control devices 285 and 287 may be configured at the surface to set the rates of flow through fluid flow lines 282 and 286, respectively. In another aspect, the rates may be set or dynamically adjusted by an active device, such as by controlling fluid flows between the chambers by actively controlled valves. In certain embodiments, the fluid flow is control actively by adjusting fluid properties by using electro or magneto rhological fluids and controllers. In other embodiments, piezo electronics are utilized to control fluid flows. In one aspect, one or both flow control

devices 285 and 287 may include a variable control biasing device, such as a spring, to provide a constant flow rate from one chamber to another. Constant fluid flow rate exchange between the chambers 272 and 274 provides a first constant rate for the extension for the piston 280 and a second constant rate for the retraction of the piston 280 and, thus, corresponding constant rates for extension and retraction of the pad 250. The size of the flow control lines 282 and 286 along with the setting of their corresponding biasing devices 285 and 287 define the flow rates through lines 282 and 286, respectively, and thus the corresponding rate of extension and retraction of the pad 250. In one aspect, the fluid flow line 282 and its corresponding flow control device 285 may be set such that when the drill bit 250 is not in use, i.e., there is no external force being applied onto the pad 250, the biasing member 280 will extend the pad 250 to the maximum extended position. In one aspect, the flow control line 282 may be configured so that the biasing member 280 extends the pad 250 relatively fast or suddenly. When the drill bit is in operation, such as during drilling of a wellbore, the weight on bit applied to the bit exerts an external force on the pad 250. This external force causes the pad 250 to apply a force or pressure on the piston 280 and thus on the biasing member 284.

In one aspect, the fluid flow line 286 may be configured to allow relatively slow flow rate of the fluid from chamber 272 into chamber or reservoir 274, thereby causing the pad to retract relatively slowly. As an example, the extension rate of the pad 250 may be set so that the pad 250 extends from the fully retracted position to a fully extended position over a few seconds while it retracts from the fully extended position to the fully retracted position over one or several minutes or longer (such as between 2-5 minutes). It will be noted, that any suitable rate may be set for the extension and retraction of the pad 250. In one aspect, the device 260 is a passive device that adjusts the extension and retraction of a pad based on or in response to the force or pressure applied on the pad 250. In an exemplary embodiment, the pads 250 are wear resistant elements, such as cutters, ovoids, elements making rolling contact, or other elements that reduce friction with earth formations. In certain embodiments, pads 250 are directly in front and in the same cutting groove as the cutters 239a, 238b. In an

exemplary embodiment, device 260 is oriented with a tilt against the direction of rotation to minimize the tangential component of friction force experienced by the piston 280. In certain embodiments, the device 260 is located inside the blades 234a, 234b, etc. supported by the bit body 201 with a press fit near the face 232a of the bit 200 and a threaded cap or retainer or a snap ring near the top end of the side portion 234a, 234b.

FIG. 3 shows an alternative rate control device 300. The device 300 includes a fluid chamber 370 divided by a double acting piston 380 into a first chamber 372 and a second chamber or reservoir 374. The chambers 372 and 374 are filled with a hydraulic fluid 378. A first fluid flow line 382 and an associated flow control device 385 allow the fluid 378 to flow from chamber 374 to chamber 372 at a first flow rate and a fluid flow line 386 and an associated flow control device 387 allow the fluid 378 to flow from the chamber 372 to chamber 374 at a second rate. The piston 380 is connected to a force transfer device 390 that includes a piston 392 in a chamber 394. The chamber 394 contains a hydraulic fluid 395, which is in fluid communication with a pad 350. In one aspect, the pad 350 may be placed in a chamber 352, which chamber is in fluid communication with the fluid 395 in chamber 394. When the biasing device 384 moves the piston 380 outward, it moves the piston 392 outward and into the chamber 394. Piston 392 expels fluid 395 from chamber 394 into the chamber 352, which extends the pad 350. When a force is applied on to the pad 350, it pushes the fluid in chamber 352 into chamber 394, which applies a force onto the piston 380. The rate of the movement of the piston 380 is controlled by the flow of the fluid through the fluid flow line 386 and flow control device 387. In the particular configuration shown in FIG. 3, the rate control device 300 is not directly connected to the pad 350, which enables isolation of the device 300 from the pad 350 and allows it to be located at any desired location in the drill bit, as described in reference to FIGS. 5-6. In another aspect, the pad 350 may be directly connected to a cutter 399 or an end of the pad 350 may be made as a cutter. In this configuration, the cutter 399 acts both as a cutter and an extendable and a retractable pad.

FIG. 4 shows a common rate control device 400 configured to operate more than one pad, such as pads 350a, 350b ... 350n. The rate control device 400 is the same as shown and described in FIG. 2, except that it is shown to apply force onto the pads 350a, 350b ... 350n via an intermediate device 390, as shown and described in reference to FIG. 3. In the embodiment of FIG. 4, each of the pads 350a, 350b ... 350n is housed in separate chambers 352a, 352b ... 352n respectively. The fluid 395 from chamber 394 is supplied to all chambers, thereby automatically and simultaneously extending and retracting each of the pads 350a, 350b ... 350n based on external forces applied to each such pad during drilling. In aspects, the rate control device 400 may include a suitable pressure compensator 499 for downhole use. Similarly any of the rate controllers made according to any of the embodiments may employ a suitable pressure compensator.

FIG. 5 shows an isometric view of a drill bit 500, wherein a rate control device 560 is placed in a crown section 530 of the drill bit 500. The rate control device 560 is the same as shown in FIG. 2, but is coupled to a pad 550 via a hydraulic connection 540 and a fluid line 542. The rate control device 560 is shown placed in a recess 580 accessible from an outside surface 582 of the crown section 530. The pad 550 is shown placed at a face location section 552 on the drill bit face 532, while the hydraulic connection 540 is shown placed in the crown 530 between the pad 550 and the rate control device 560. It should be noted that the rate control device 560 may be placed at any desired location in the drill bit, including in the shank 520 and neck section 510 and the hydraulic line 542 may be routed in any desired manner from the rate control device 560 to the pad 550. Such a configuration provides flexibility of placing the rate control device substantially anywhere in the drill bit.

FIG. 6 shows an isometric view of a drill bit 600, wherein a rate control device 660 is placed in a fluid passage 625 of the drill bit 600. In the particular drill bit configuration of FIG. 6, the hydraulic connection 640 is placed proximate the rate control device 660. A hydraulic line 670 is run from the hydraulic connection 640 to the pad 650 through the shank 620 and the crown 630 of the drill bit 600. During drilling, a drilling fluid flows through the passage 625. To enable the drilling fluid to

flow freely through the passage 625, the rate control device 660 may be provided with a through bore or passage 655 and the hydraulic connection device 640 may be provided with a flow passage 645.

FIG. 7 shows a drill bit 700, wherein an integrated pad and rate control device 750 is placed on an outside surface of the drill bit 700. In one aspect, the device 750 includes a rate control device 760 connected to a pad 755. In one aspect, the device 750 is a sealed unit that may be attached to any outside surface of the drill bit 700. The rate control device 760 may be the same as or different from the rate control devices described herein in reference to FIGS. 2-6. In the particular embodiment of FIG. 7, the pad is shown connected to a side 720a of a blade 720 of the drill bit 700. The device 750 may be attached or placed at any other suitable location in the drill bit 700. Alternatively or in addition thereto, the device 750 may be integrated into a blade so that the pad will extend toward a desired direction from the drill bit.

FIG. 8A shows an integrated rate control device 800. In an exemplary embodiment rate control devices 800 are individual self-contained cartridges to be disposed inside the blades of a bit, such as the bits previously described. In this embodiment, rate control functionality is achieved through a pressure management device, such as multi-stage orifice 899. FIG. 8B shows the multi-stage orifice 899 with a plurality of orifices 898 that provide a tortuous path for fluid 878 between upper chamber 872 and lower chamber 874. In an exemplary embodiment, upper chamber 872 is subject to a higher pressure than lower chamber 874. In certain embodiments, lower chamber 874 is close to downhole pressure. Accordingly, in an exemplary embodiment, multistage orifice 899 controls the movement and pressure within rate control device 800 in conjunction with biasing member 884, by controlling the flow of fluid 878 therein. Accordingly, the rate of pad 850 is effectively controlled by adjusting the properties of the orifice 899. In certain embodiments, the lower chamber 874 is pressure-compensated. In an exemplary embodiment, the lower chamber 874 is pressure compensated with downhole pressure to minimize the pressure differential across the mud-oil seal 875 at the bit face.

FIG. 9 shows an integrated rate control device 900. In an exemplary embodiment, rate control devices 900 are self-contained cartridges disposed inside the blades of a bit, such as the bits previously described. In this embodiment, the rate control functionality is achieved through a pressure management device, such as high-precision gap 999 between the piston 980 and the cylinder 994. The high-precision gap 999 allows a predetermined amount of fluid 978 to be transferred between upper chamber 972 and lower chamber 974 at a given pressure differential, effectively controlling the rate of movement of piston 980. In certain embodiments, high-precision gap 999 also acts as a high-pressure seal between the two chambers 972, 974. In certain embodiments, the chambers 972, 974 respectively contain a high pressure fluid and a low pressure fluid. In an exemplary embodiment, the lower chamber 974 (low pressure chamber) is pressure-compensated with downhole pressure to minimize the pressure differential across the mud-oil seal (not shown) at the bit face. In an exemplary embodiment, the pressure-compensation is achieved through bellows in communication with the downhole formation pressure.

FIG. 10 shows a drill bit 1000 with a rate controller 1090 located in the bit shank 1091 of the drill bit 1000. In an exemplary embodiment, rate control device 1090 is hydraulically connected to multiple pistons 1080 via hydraulic passages 1092 that allow passage of fluid 1078 therethrough to act as a linkage 1056a. Advantageously, the central location of rate control device 1090 allows for a large space for the rate control device 1090 while allowing multiple pistons 1080 to be utilized and share load during drill bit operation. In certain embodiments, the pressure drop across the bit 1000 is utilized to create the downward force. In these embodiments, the low pressure chamber 1074 is compensated to have the same pressure as the drilling fluid pressure inside the bit, while the top rod or chamber 1072 of the compensated piston 1080 is exposed to the pressure inside the bit 1000 causing a net downward force. In certain embodiments, a secondary linkage 1056b is hydraulically or mechanically linked to the pad 1050.

FIG. 11 shows a drill bit 1100 with a rate controller 1190 centrally located in the drill bit 1100. In an exemplary embodiment, the rate control device 1190 is centrally

located and mechanically or hydraulically connected to multiple pads 1150. Advantageously, this allows for reduction in the peak pressure inside the rate controller 1190 and also reduces number of parts as the pads 1150 as centrally actuated as shown in FIG. 4.

FIG. 12 shows a rate control device 1200 that utilizes a triple-walled cylinder 1298 with annular gaps 1299 between walls 1298a, 1298b, 1298c. In an exemplary embodiment, annular gap 1299 is a pressure management device, such as a high precision gap to restrict flow of fluid 1278 to control the movement of piston 1280. In an exemplary embodiment, fluid flow 1278 moves through ports 1299a and 1299b to interface with both sides of piston 1280. In certain embodiments, ports 1299a and 1299b have check valves to restrict fluid flow 1278. During operation, fluid 1278 is restricted by gap 1299 to control the flow of fluid 1278, resulting in the controlled movement of piston 1280. In certain embodiments, a pressure compensator 1297 is utilized to compensate the pressure of lower chamber 1274 to downhole fluid pressure.

FIG. 13 shows a rate control device 1300 with a compensated piston 1380. In an exemplary embodiment, a double acting piston 1380 with substantially equal rod size is exposed to both upper chamber 1372 and lower chamber 1374. In an exemplary embodiment, both ends piston 1380 are exposed to the bottomhole pressure so that net force on the piston 1380 due to drilling fluid pressure is near zero. In certain embodiments, a hydraulic accumulator 1399 can be used with the compensated piston 1380 to accommodate for fluid volume changes with temperature, trapped air, and leakages. In certain embodiments, a biasing member 1378 is utilized to provide a downward force. Advantageously, both chambers 1372, 1374 are compensated to minimize the pressure differential between the rate control device 1300 and the wellbore.

FIG. 14 shows a rate control device 1400 that utilizes a rotary seal 1496 at the mud-oil interface when disposed within a drill bit (shown schematically as 1401). In an exemplary embodiment, a cam 1492 is located outside of the drill bit 1401 and the rotary motion is transmitted via shaft 1491 into the bit body through a rotary seal 1496. The rotary motion is converted into a translational motion inside the bit body using a

second cam 1493 and a follower 1494 attached to the piston 1480. In certain embodiments, such as when a low depth of cut is desired, the first cam 1492 exposes the adaptive element 1450 attached. As external load is experienced by first cam 1492, the load rotates the first cam 1492, and in turn the second cam 1493, which in turn causes inward motion (hiding) of the piston 1480. When external load is released, the piston 1480 extends due to the spring 1484 force, and in turn rotates the cams 1492, 1493 and exposes the adaptive elements 1450. Thus, the contact element 1450 is extended (exposed) and retracted (hidden) at different rates controlled by cam 1492, 1493 profile and biasing member 1484 characteristics.

FIG. 15 shows a rate control device 1500 that utilizes a fixed pressure management device 1599. In an exemplary embodiment, pressure management device 1599 is stationary relative to moving piston 1580. In an exemplary embodiment, downhole fluid pressure 1575 is exerted upon separator 1597 to compensate the pressure of reservoir 1574. Fluid 1587 may flow between fluid chamber 1572 and reservoir 1574 via pressure management device 1599. In one aspect, the chamber 1572 and reservoir 1574 are in fluid communication with each other via a first fluid flow path or flow line 1582 and a second fluid flow path or flow line 1586. A flow control device, such as a check valve 1585, placed in the fluid flow line 1582, may be utilized to control the rate of flow of the fluid from reservoir 1574 to chamber 1572. Similarly, another flow control device, such as a check valve 1587, placed in fluid flow line 1586, may be utilized to control the rate of flow of the fluid 1578 from chamber 1572 to reservoir 1574. The flow control devices 1585 and 1587 may be configured at the surface to set the rates of flow through fluid flow lines 1582 and 1586, respectively. In certain embodiments, the pressure exerted from downhole fluid 1575 biases the piston 1580 downward.

Therefore in one aspect, a drill bit is disclosed, including: a bit body; a pad associated with the bit body; a rate control device coupled to the pad that extends from a bit surface at a first rate and retracts from an extended position to a retracted position at a second rate in response to external force applied onto the pad, the rate control device including: a piston for applying a force on the pad; a biasing member that applies a

force on the piston to extend the pad at the first rate; a fluid chamber associated with the piston; and a pressure management device for controlling a fluid pressure within the fluid chamber. In certain embodiments, the second rate is less than the first rate. In certain embodiments, the fluid chamber is divided by the piston into a first fluid chamber and a second fluid chamber. In certain embodiments, the pressure management device is a multi-stage orifice. In certain embodiments, the pressure management device is a high precision gap disposed between the piston and the fluid chamber. In certain embodiments, the fluid chamber is a triple walled cylinder having a first wall, a second wall and a third wall, and at least one of the first wall, the second wall, and the third wall includes the high precision gap. In certain embodiments, the piston is a double acting piston, wherein a fluid acting on a first side of the piston controls at least in part the first rate and a fluid acting on a second side of the piston controls at least in part the second rate and the pressure management device includes at least one rod with both a first end and a second end both exposed to a bottomhole pressure. In certain embodiments, the rate control device includes an accumulator associated with the first side of the piston and the second side of the piston. In certain embodiments, the piston is a plurality of hydraulically linked pistons. In certain embodiments, the pad is a plurality of pads that extend from the rate control device, wherein the rate control device is centrally disposed. In certain embodiments, the rate control device is oriented with a tilt against the direction of rotation of the drill bit. In certain embodiments, the rate control device is a self-contained cartridge. In certain embodiments, the self-contained cartridge is associated with the drill bit via a press fit or a retainer.

In another aspect, a method of drilling a wellbore is disclosed, including: providing a drill bit including a bit body, a pad associated with the bit body, and a rate control device; conveying a drill string into a formation, the drill string having a drill bit at the end thereof; selectively extending the pad from a bit surface at a first rate via the rate control device; selectively retracting from an extended position to a retracted position at a second rate in response to external force applied onto the pad via the rate control device, the rate control device including: a piston for applying a force on the

pad; a biasing member that applies a force on the piston to extend the pad at the first rate; a fluid chamber associated with the piston; and controlling a fluid pressure within the fluid chamber via a pressure management device; and drilling the wellbore using the drill string. In certain embodiments, the second rate is less than the first rate. In certain embodiments, the fluid chamber is divided by the piston into a first fluid chamber and a second fluid chamber. In certain embodiments, the pressure management device is a multi-stage orifice. In certain embodiments, the pressure management device is a high precision gap disposed between the piston and the fluid chamber. In certain embodiments, the fluid chamber is a triple walled cylinder having a first wall, a second wall and a third wall, and at least one of the first wall, the second wall, and the third wall includes the high precision gap. In certain embodiments, the piston is a double acting piston, wherein a fluid acting on a first side of the piston controls at least in part the first rate and a fluid acting on a second side of the piston controls at least in part the second rate and the pressure management device includes at least one rod with both a first end and a second end both exposed to a bottomhole pressure. In certain embodiments, the rate control device further includes an accumulator associated with the first side of the piston and the second side of the piston. In certain embodiments, the piston is a plurality of hydraulically linked pistons. In certain embodiments, the pad is a plurality of pads that extend from the rate control device, wherein the rate control device is centrally disposed.

In another aspect, a system for drilling a wellbore is disclosed, including: a drilling assembly having a drill bit, the drill bit including: a bit body; a pad associated with the bit body; a rate control device coupled to the pad that extends from a bit surface at a first rate and retracts from an extended position to a retracted position at a second rate in response to external force applied onto the pad, the rate control device including: a piston for applying a force on the pad; a biasing member that applies a force on the piston to extend the pad at the first rate; a fluid chamber associated with the piston; and a pressure management device for controlling a fluid pressure within the fluid chamber. In certain embodiments, the second rate is less than the first rate. In certain embodiments, the fluid chamber is divided by the piston into a first fluid

chamber and a second fluid chamber. In certain embodiments, the pressure management device is a multi-stage orifice. In certain embodiments, the pressure management device is a high precision gap disposed between the piston and the fluid chamber.

In another aspect, a drill bit is disclosed, including: a bit body; a pad associated with the bit body; a rate control device coupled to the pad that extends from a bit surface at a first rate and retracts from an extended position to a retracted position at a second rate in response to an external force applied, the rate control device including: a piston for applying a force on the pad; a biasing member that applies a force on the piston to expose the pad at the first rate; and a rotary device that applies a force on the piston to hide the pad at the second rate. In certain embodiments, the second rate is less than the first rate.

The foregoing disclosure is directed to certain specific embodiments for ease of explanation. Various changes and modifications to such embodiments, however, will be apparent to those skilled in the art. It is intended that all such changes and modifications within the scope and spirit of the appended claims be embraced by the disclosure herein.

CLAIMS

What is claimed is:

1. A downhole rotary drilling tool, comprising:

a tool body;

a self-adjusting extendible and retractable element associated with the tool body and at least partially projecting from a surface of the tool body;

a rate control device coupled to the element, the rate control device configured to cause the element to extend outward relative to the tool body from a retracted position to an extended position at a first rate in the absence of an external force applied to the element, the rate control device configured to cause the element to retract inward relative to the tool body from the extended position to the retracted position at a second rate in response to external force applied to the element, the second rate differing from the first rate, the rate control device including:

a piston for applying a force on the element;

a biasing member that applies a force on the piston to extend the element;

a fluid chamber associated with the piston; and

a pressure management device for controlling a fluid pressure within the fluid chamber.

2. The drilling tool of claim 1, wherein the second rate is less than the first rate.

3. The drilling tool of claim 1, wherein the fluid chamber is divided by the piston into a first fluid chamber and a second fluid chamber.

4. The drilling tool of claim 1, wherein the pressure management device is a multi-stage orifice.

5. The drilling tool of claim 1, wherein the pressure management device comprises a gap disposed between the piston and the fluid chamber.

6. The drilling tool of claim 5, wherein the fluid chamber comprises a triple walled cylinder having a first wall, a second wall and a third wall, wherein at least one of the first wall, the second wall, and the third wall includes the gap.

7. The drilling tool of claim 1, wherein the piston comprises a double acting piston, and wherein a fluid acting on a first side of the piston controls at least in part the first rate and a fluid acting on a second side of the piston controls at least in part the second rate and the pressure management device includes at least one rod with a first end and a second end, each of the first end and the second end being exposed to a downhole pressure.

8. The drilling tool of claim 7, further including an accumulator associated with the first side of the piston and the second side of the piston.

9. The drilling tool of claim 1, wherein the piston is one piston of a plurality of hydraulically linked pistons.

10. The drilling tool of claim 1, wherein the element is a pad or a cutting element.

11. The drilling tool of claim 1, wherein the rate control device is oriented at an angle relative to a direction of intended rotation of the drilling tool so as to reduce a tangential component of a frictional force, if any, experienced by the piston.

12. The drilling tool of claim 1, wherein the rate control device is a self-contained cartridge.

13. The drilling tool of claim 12, wherein the self-contained cartridge is retained within the drilling tool via a press fit or a retainer.

14. A method of drilling a wellbore, comprising:

incorporating a drilling tool in a drill string, the drilling tool including a tool body, a self-adjusting extendible and retractable element associated with the tool body and at least partially projecting from a surface of the tool body, and a rate control device, wherein the rate control device includes a piston for applying a force on the element, a biasing member that applies a force on the piston toward the element, a fluid chamber associated with the piston, and a pressure management device for controlling a fluid pressure within the fluid chamber;

conveying the drill string into a formation;

allowing outward extension of the element relative to the tool body from a retracted position to an extended position at a first rate controlled by the rate control device in the absence of an external force applied to the element;

allowing retraction of the element from the extended position to the retracted position at a second rate controlled by the rate control device in response to external force applied to the element by the formation, the second rate differing from the first rate;

controlling the fluid pressure within the fluid chamber via a pressure management device; and

drilling the wellbore using the drill string.

15. The method of claim 14, further comprising reducing vibrations in the drill string using the self-adjusting extendible and retractable element.

16. The method of claim 14, further comprising adjusting maneuverability of the drilling tool using the self-adjusting extendible and retractable element.

17. The method of claim 14, wherein the second rate is less than the first rate.

18. The method of claim 14, wherein the fluid chamber is divided by the piston into a first fluid chamber and a second fluid chamber.

19. The method of claim 14, wherein the pressure management device is a multi-stage orifice.

20. The method of claim 14, wherein the piston is one piston of a plurality of hydraulically linked pistons.

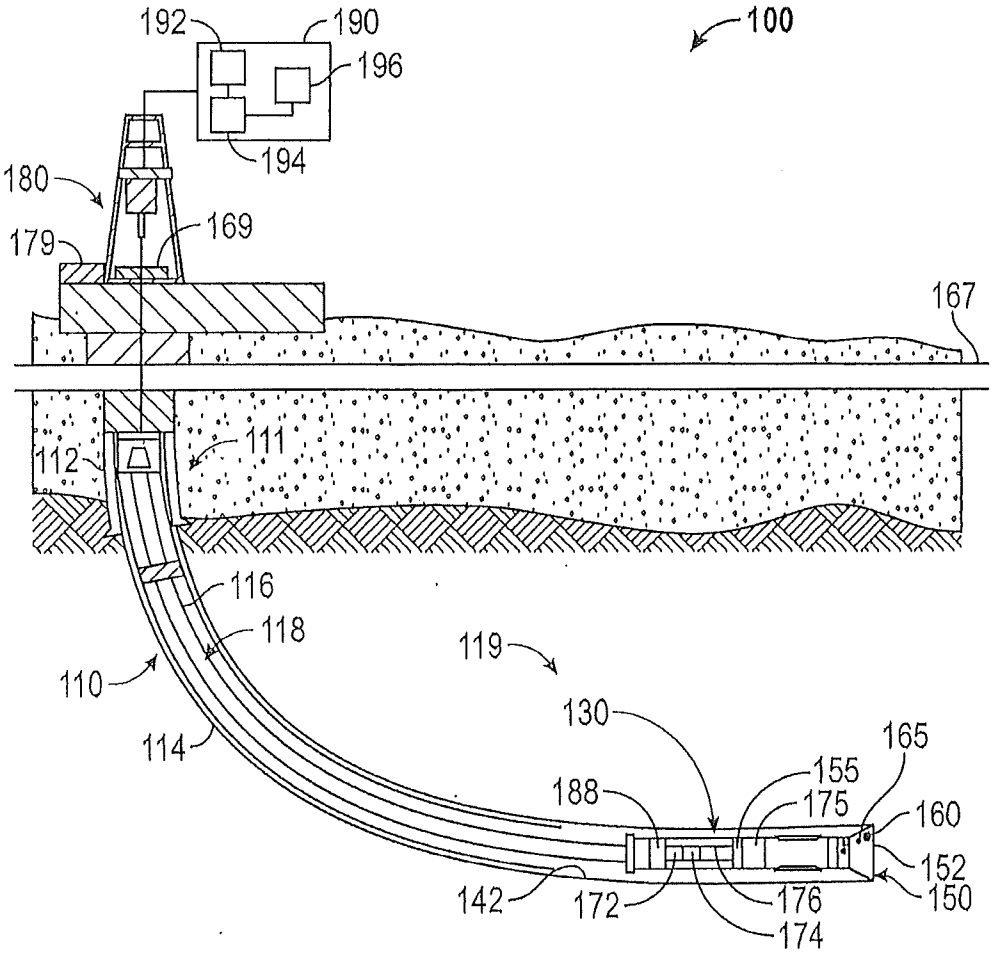
192
190
196
100
194
180
169
179
167
111
112
116
118
119
110
130
165
114
155
188
175
160
152
142
172
176
150
174

FIG. 1

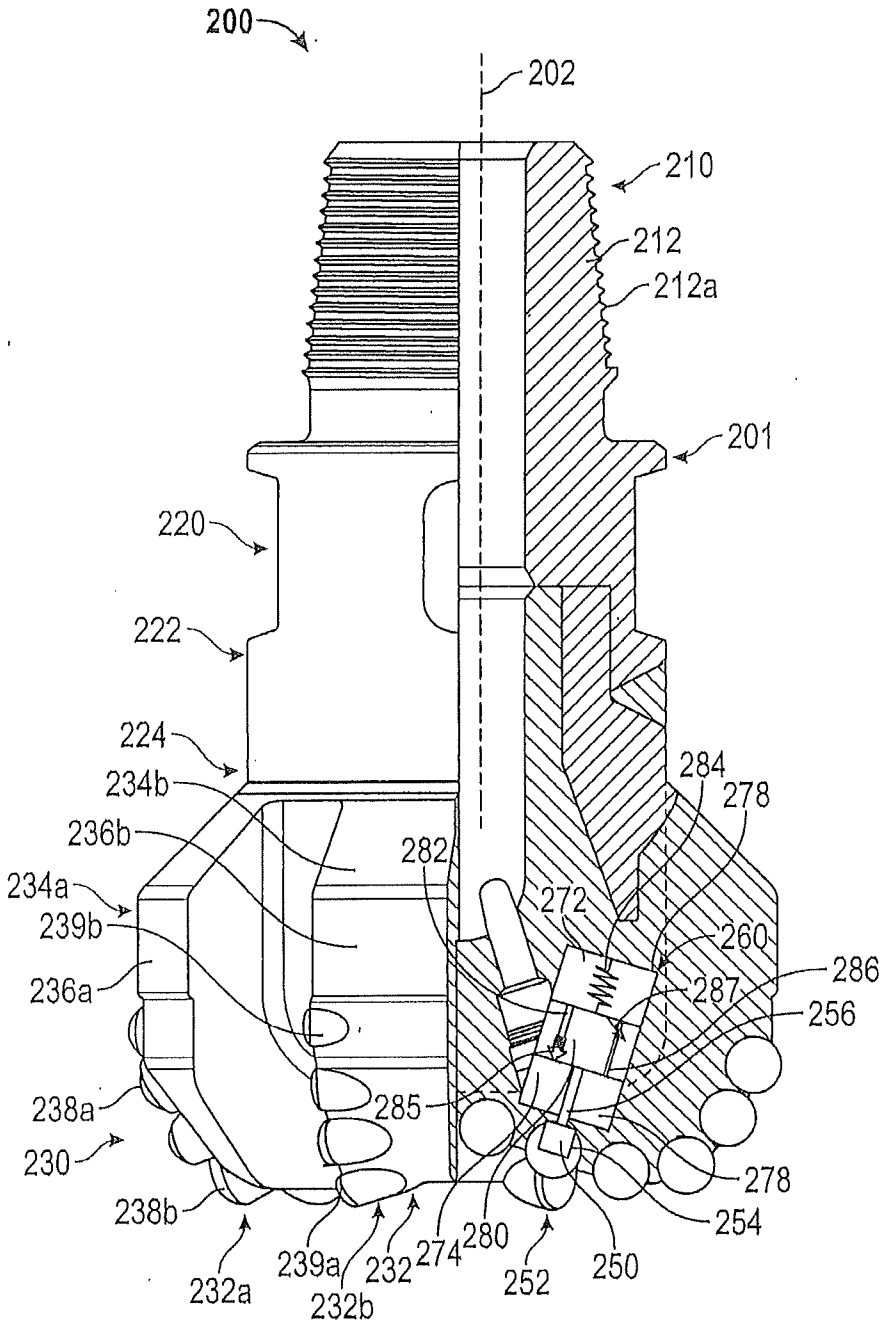
200
202
210
212
212a
201
220
222
224
234b
236b
234a
239b
236a
238a
230
238b
232a
239a
232b
232
274
280
252
250
254
278
285
282
272
284
278
260
286
287
256

FIG. 2

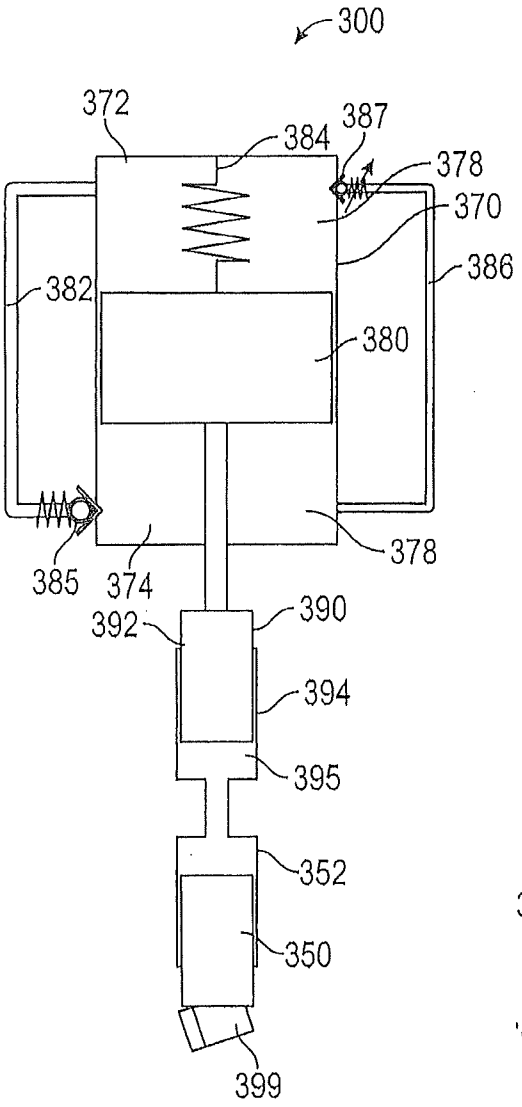
300
372
384
387
378
370
386
382
380
385
374
378
390
392
394
395
352
350
399

FIG. 3

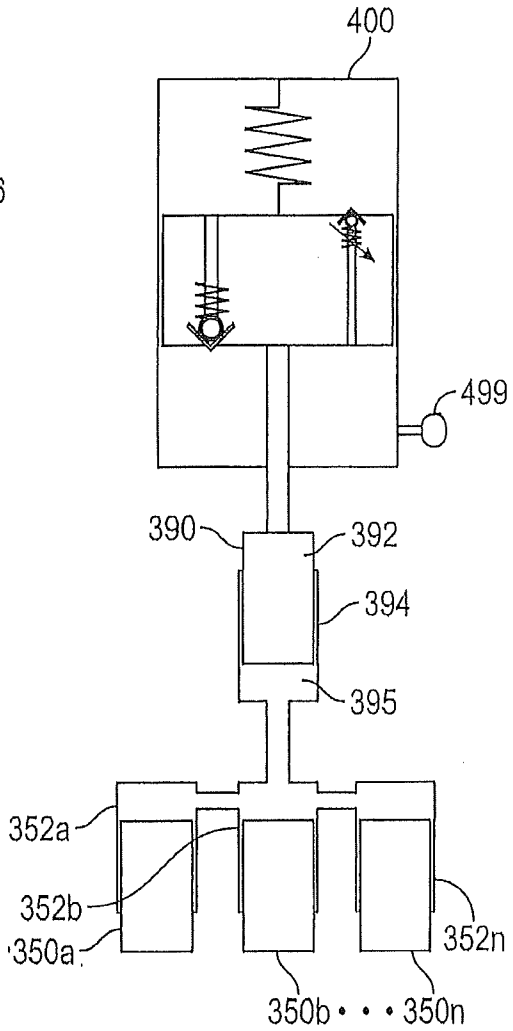
400
499
390
392
394
395
352a
352b
350a
352n
350b • • • 350n

FIG. 4

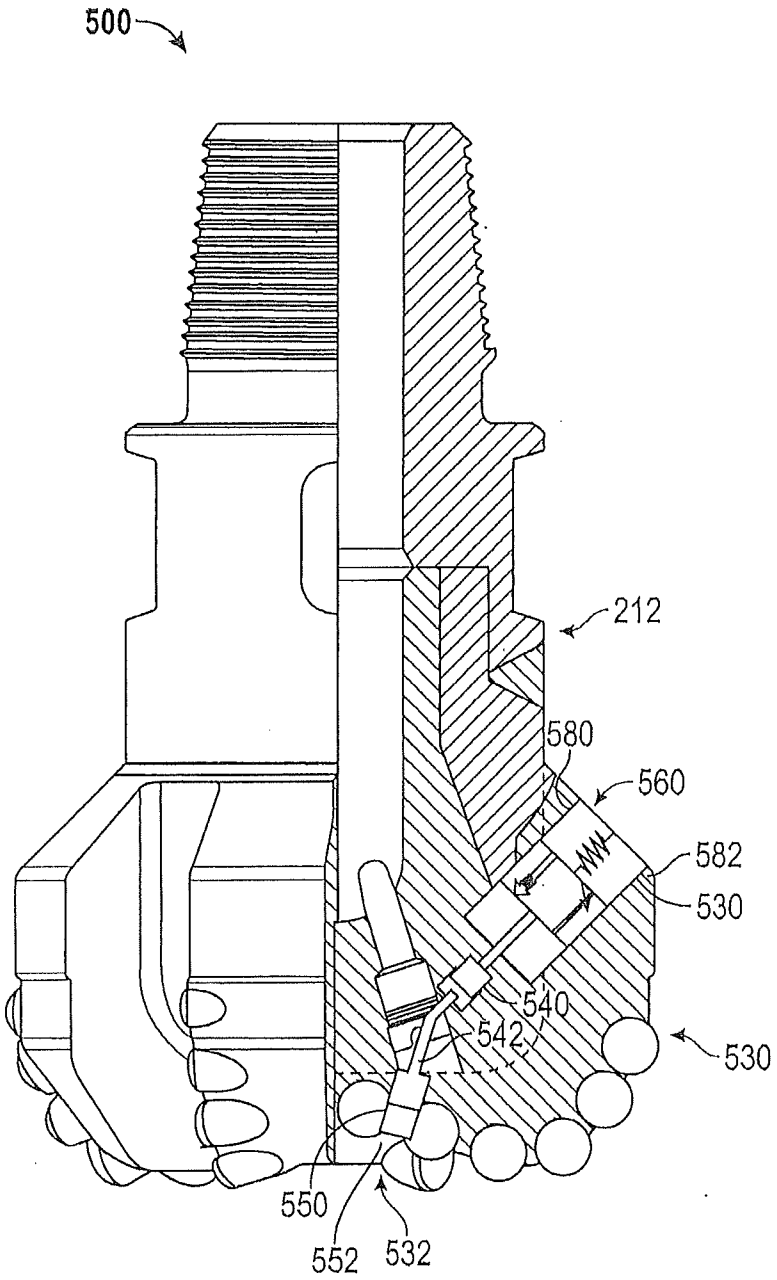

FIG. 5

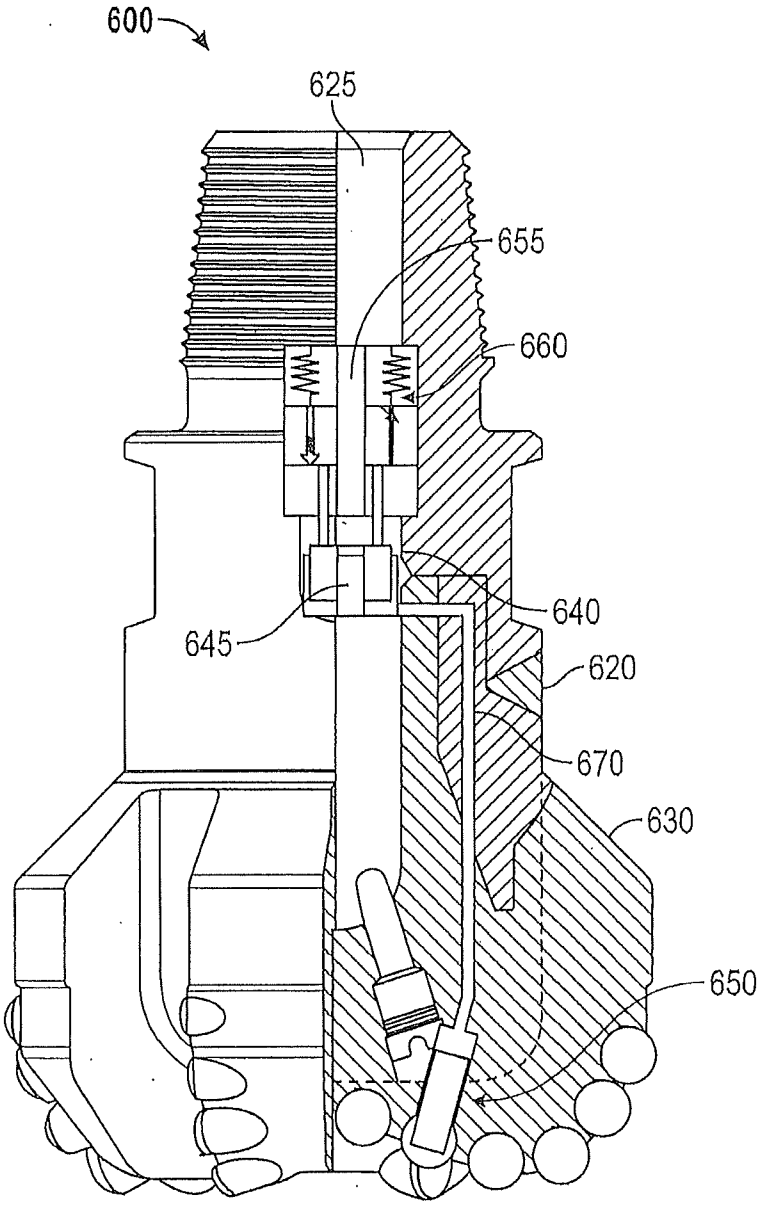

FIG. 6

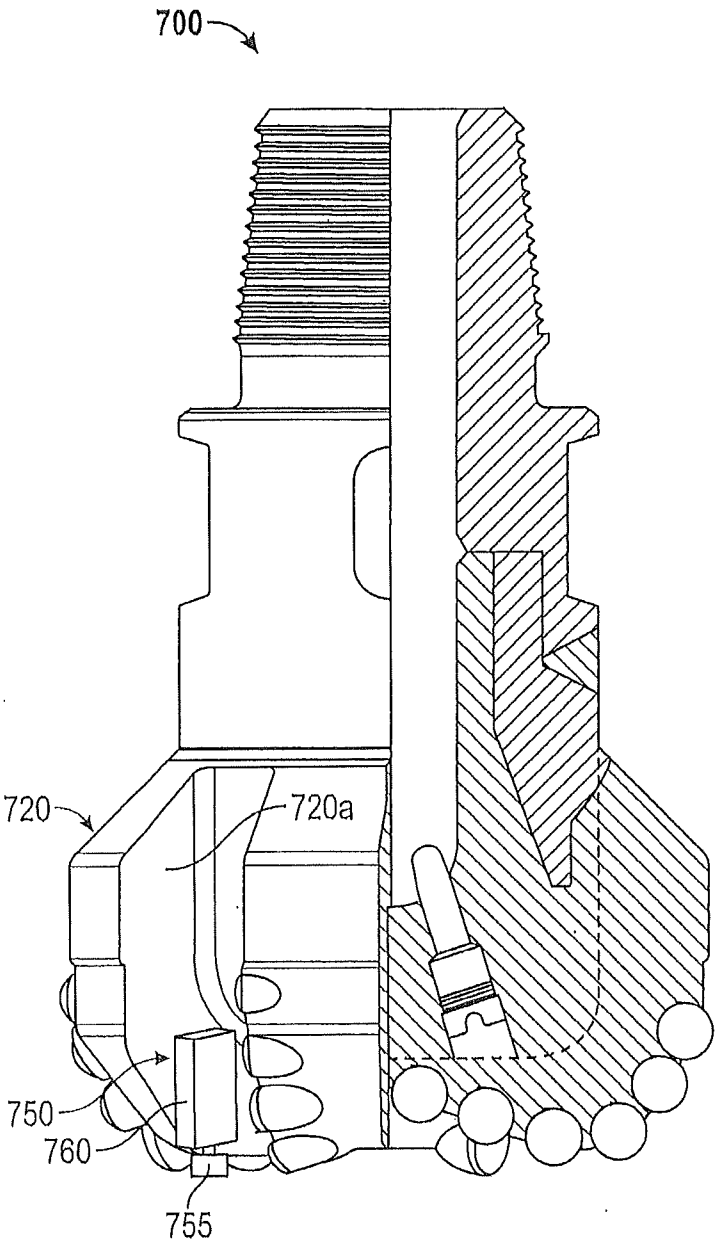

FIG. 7

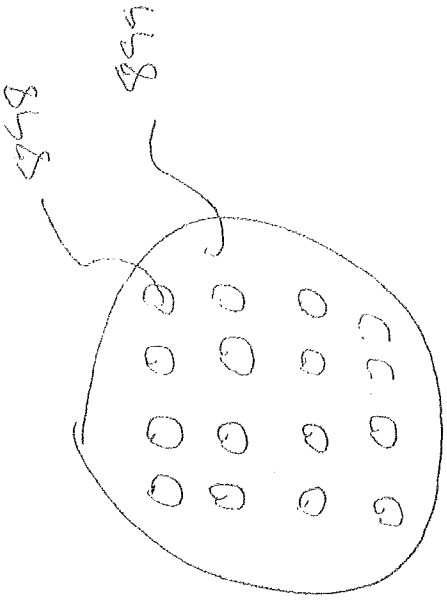

FIG. 8B

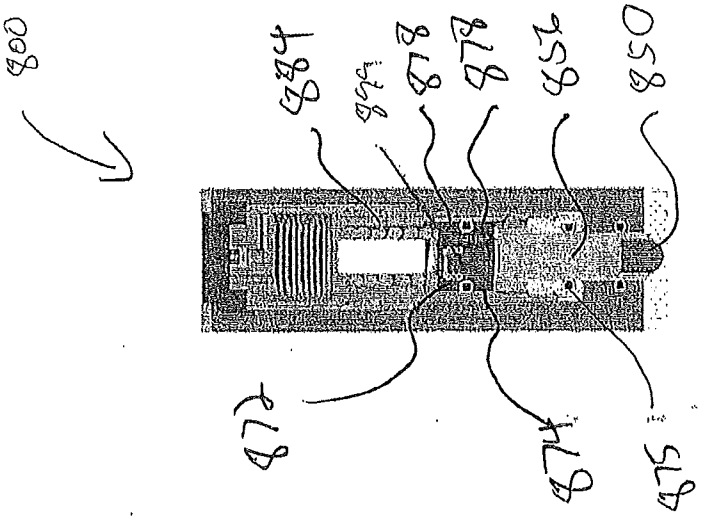

FIG. 8A

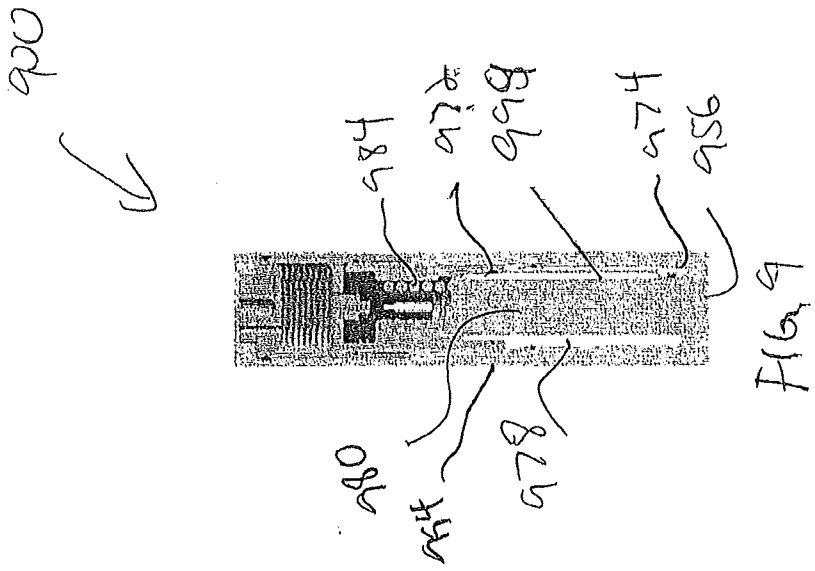

FIG 9

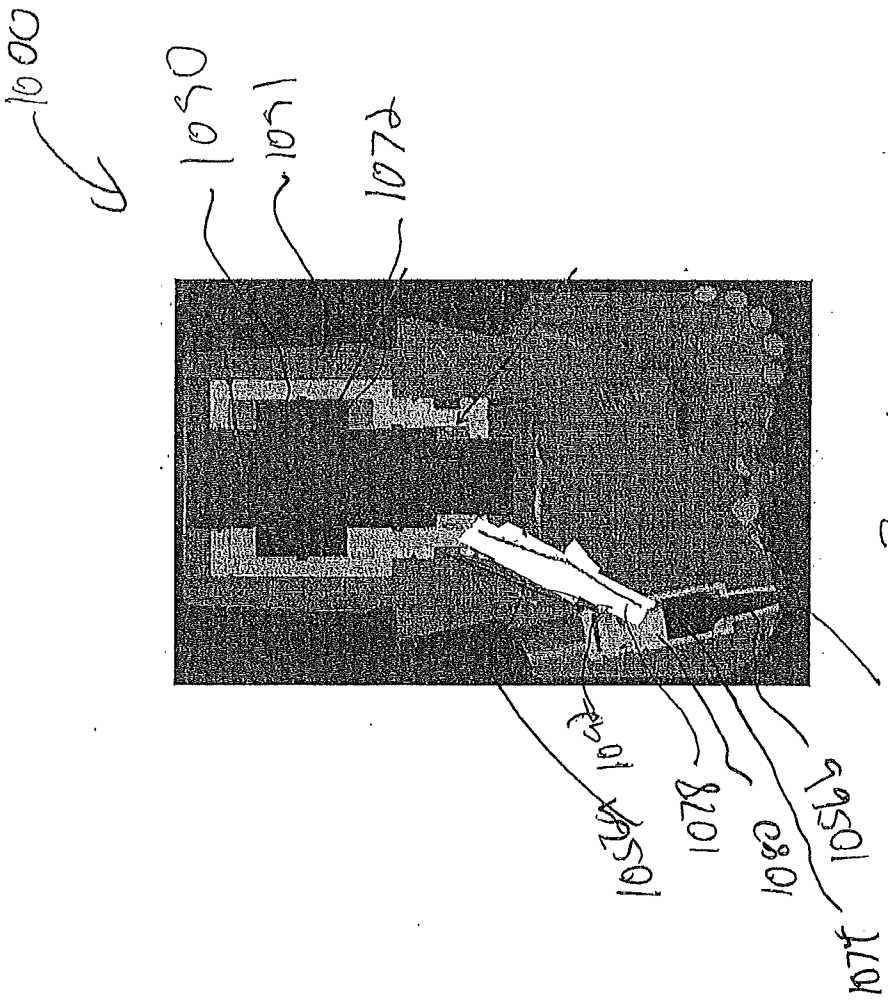

FIG. 10

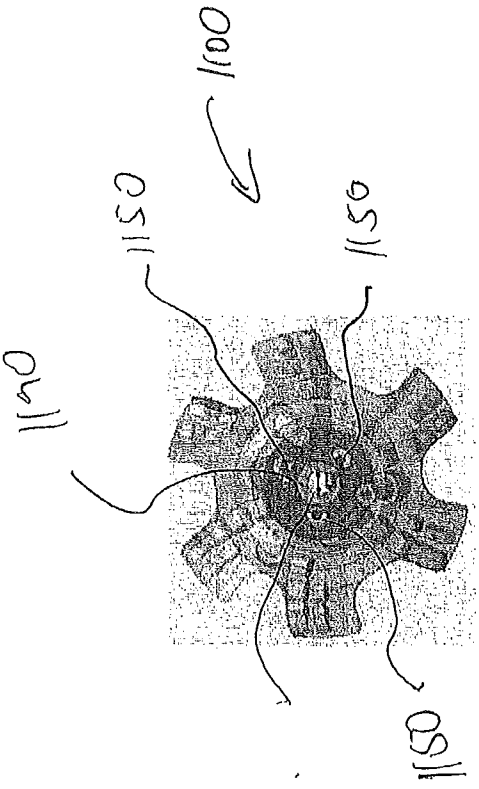

FIG. 11

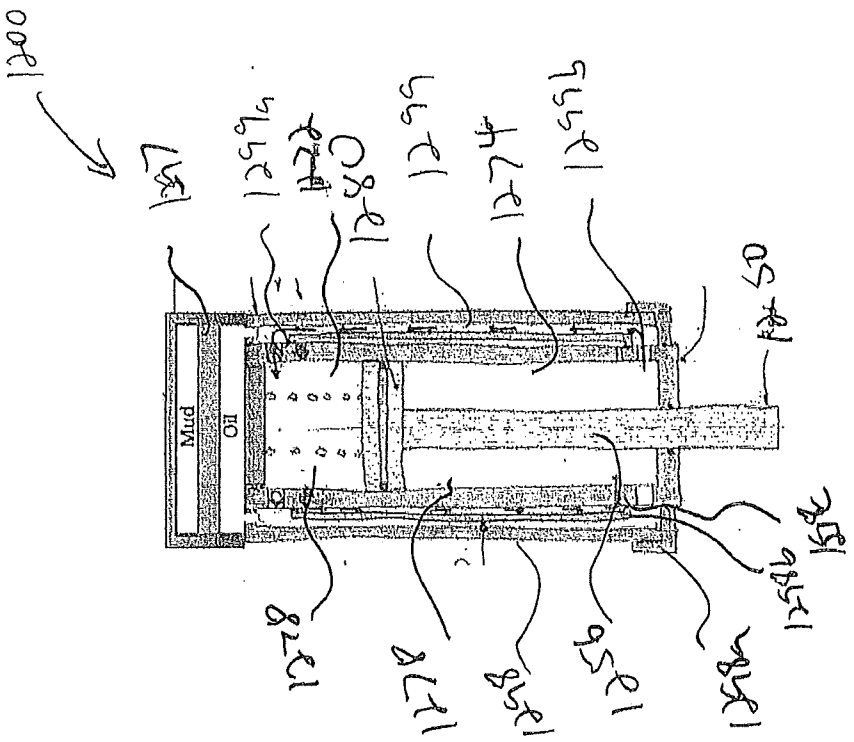
1200
1202
1204
1206
1208
1210
1212
1214
1216
1218
1220
1222
Mud
Oil

Fig 12

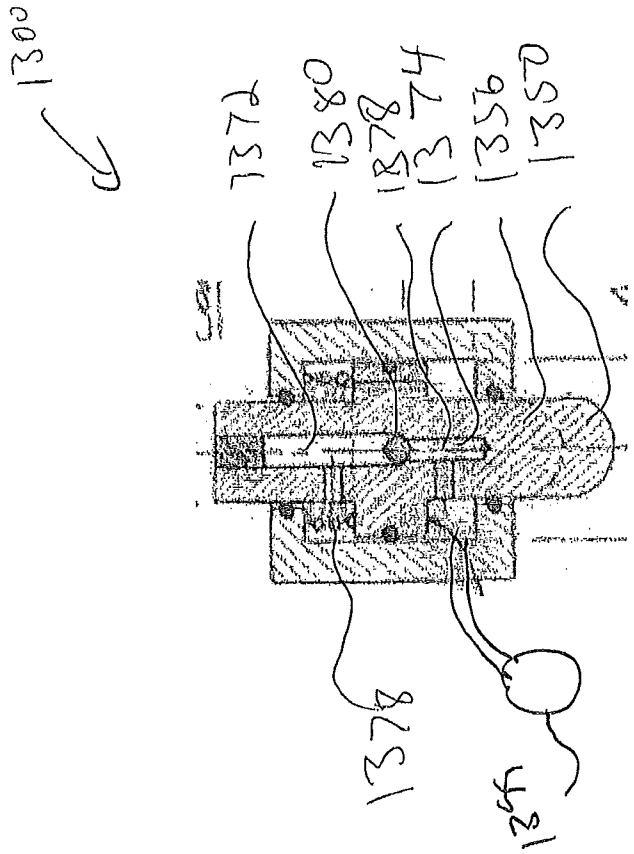

FIG 13

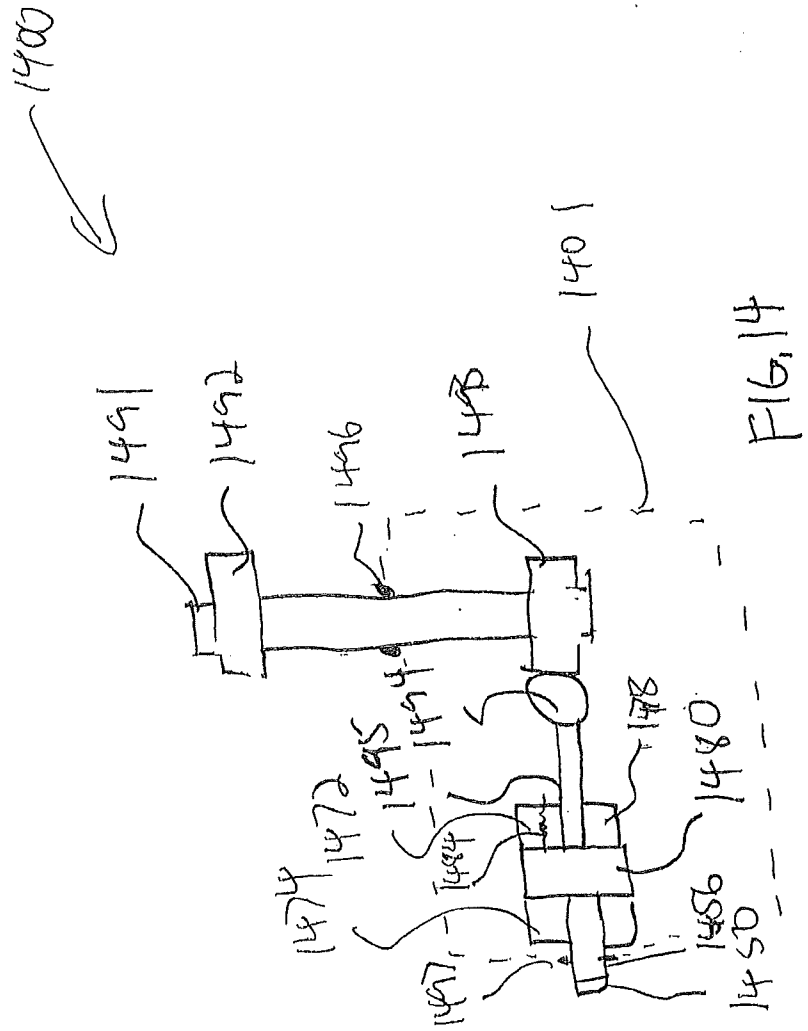
1400
1401
1402
1403
1404
1405
1406
1407
1408
1409
1410
1411
1412
1413
1414
1415
1416
1417
1418

FIG. 14

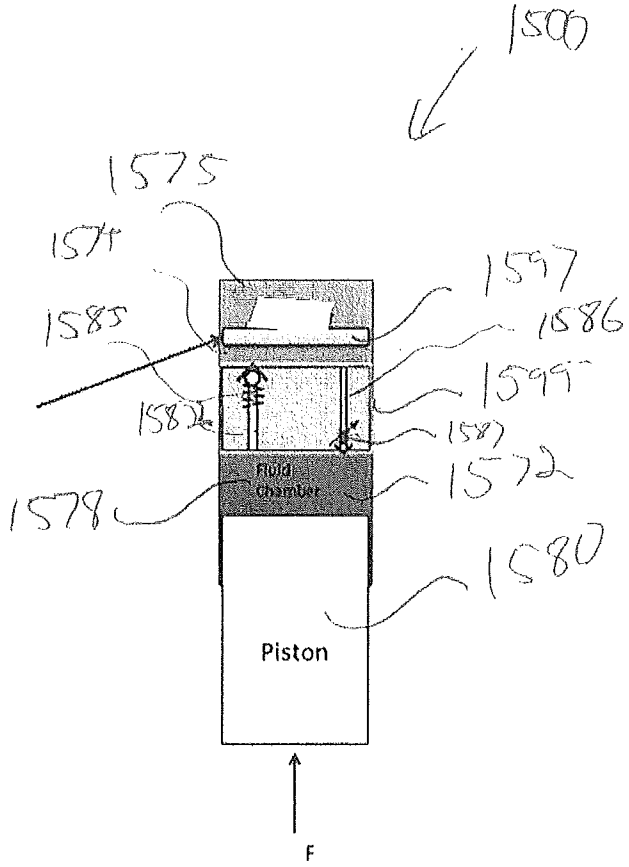
1500
1575
1571
1597
1585
1586
1599
1582
1587
Fluid Chamber
1572
1578
1580
Piston
F

FIG. 15

INTERNATIONAL SEARCH REPORT

International application No.
PCT/US2015/055944

A. CLASSIFICATION OF SUBJECT MATTER

E21B 10/42(2006.01)i, E21B 10/43(2006.01)i, E21B 10/62(2006.01)i

According to International Patent Classification (IPC) or to both national classification and IPC

B. FIELDS SEARCHED

Minimum documentation searched (classification system followed by classification symbols)
E21B 10/42; E21B 7/00; E21B 44/00; E21B 7/08; E21B 10/66; E21B 23/00; E21B 7/04; E21B 10/43; E21B 10/62

Documentation searched other than minimum documentation to the extent that such documents are included in the fields searched
Korean utility models and applications for utility models
Japanese utility models and applications for utility models

Electronic data base consulted during the international search (name of data base and, where practicable, search terms used)
eKOMPASS(KIPO internal) & keywords: drill bit, self-adjusting pad, rate control device, piston, chamber, biasing member, pressure management

C. DOCUMENTS CONSIDERED TO BE RELEVANT

Category*	Citation of document, with indication, where appropriate, of the relevant passages	Relevant to claim No.
X	US 2012-0255788 A1 (SCHWEFE et al.) 11 October 2012 See paragraphs [0026]-[0028], claims 1, 9 and figures 3A-3B.	1-2,9-10,14-17,20
Y		3-8,11-13,18-19
Y	US 2011-0277990 A1 (KOTSONIS et al.) 17 November 2011 See paragraph [0043] and figure 2.	3-8,18-19
Y	US 2008-0000693 A1 (HUTTON, RICHARD) 03 January 2008 See paragraph [0049] and figure 6.	11
Y	US 2012-0318580 A1 (OESTERBERG, MARCUS) 20 December 2012 See paragraphs [0038]-[0039] and figures 5A-5B.	12-13
A	US 2009-0044979 A1 (JOHNSON et al.) 19 February 2009 See abstract, claim 1 and figure 1A.	1-20

☐ Further documents are listed in the continuation of Box C.

☒ See patent family annex.

* Special categories of cited documents:
"A" document defining the general state of the art which is not considered to be of particular relevance
"E" earlier application or patent but published on or after the international filing date
"L" document which may throw doubts on priority claim(s) or which is cited to establish the publication date of another citation or other special reason (as specified)
"O" document referring to an oral disclosure, use, exhibition or other means
"P" document published prior to the international filing date but later than the priority date claimed
"T" later document published after the international filing date or priority date and not in conflict with the application but cited to understand the principle or theory underlying the invention
"X" document of particular relevance; the claimed invention cannot be considered novel or cannot be considered to involve an inventive step when the document is taken alone
"Y" document of particular relevance; the claimed invention cannot be considered to involve an inventive step when the document is combined with one or more other such documents,such combination being obvious to a person skilled in the art
"&" document member of the same patent family

Date of the actual completion of the international search	Date of mailing of the international search report
30 December 2015 (30.12.2015)	**30 December 2015 (30.12.2015)**

Name and mailing address of the ISA/KR
International Application Division
Korean Intellectual Property Office
189 Cheongsa-ro, Seo-gu, Daejeon, 35208, Republic of Korea
Facsimile No. +82-42-472-7140

Authorized officer
HWANG, Chan Yoon
Telephone No. +82-42-481-3347

INTERNATIONAL SEARCH REPORT

Information on patent family members

International application No.
PCT/US2015/055944

Patent document cited in search report	Publication date	Patent family member(s)	Publication date
US 2012-0255788 A1	11/10/2012	CA 2875197 A1	19/12/2013
		CN 104508230 A	08/04/2015
		EP 2859172 A1	15/04/2015
		WO 2013-188206 A1	19/12/2013
US 2011-0277990 A1	17/11/2011	GB 2454697 A	20/05/2009
		GB 2454697 B	30/11/2011
		US 9175518 B2	03/11/2015
		WO 2009-062718 A2	22/05/2009
		WO 2009-062718 A3	22/07/2010
US 2008-0000693 A1	03/01/2008	CA 2597390 A1	17/08/2006
		CA 2597390 C	15/07/2014
		GB 2423102 A	16/08/2006
		GB 2423102 B	27/06/2007
		GB 2423102 C	21/08/2007
		NO 20074499 A	12/11/2007
		US 7849936 B2	14/12/2010
		WO 2006-085105 A1	17/08/2006
US 2012-0318580 A1	20/12/2012	CA 2838732 A1	20/12/2012
		CN 103703209 A	02/04/2014
		EP 2721243 A2	23/04/2014
		MX 2013014902 A	17/02/2014
		RU 2014100613 A	20/07/2015
		US 2015-292268 A1	15/10/2015
		US 9080399 B2	14/07/2015
		WO 2012-174206 A2	20/12/2012
		WO 2012-174206 A3	25/04/2013
US 2009-0044979 A1	19/02/2009	AU 2008-288343 A1	19/02/2009
		CA 2694857 A1	19/02/2009
		CA 2694858 A1	19/02/2009
		CA 2694868 A1	19/02/2009
		CA 2694977 A1	19/02/2009
		CN 101778992 A	14/07/2010
		CN 101784745 A	21/07/2010
		CN 101784746 A	21/07/2010
		CN 101784746 B	25/06/2014
		CN 101784747 A	21/07/2010
		CN 101784747 B	09/10/2013
		CN 101827994 A	08/09/2010
		CN 101827995 A	08/09/2010
		CN 101827995 B	26/02/2014
		CN 103299020 A	11/09/2013
		CN 103774990 A	07/05/2014
		EP 2176493 A1	21/04/2010
		EP 2176494 A1	21/04/2010
		EP 2176495 A1	21/04/2010

INTERNATIONAL SEARCH REPORT

Information on patent family members

International application No.

PCT/US2015/055944

Patent document cited in search report	Publication date	Patent family member(s)	Publication date
		EP 2176501 A1	21/04/2010
		EP 2188483 A1	26/05/2010
		EP 2188484 A1	26/05/2010
		US 2009-0044977 A1	19/02/2009
		US 2009-0044978 A1	19/02/2009
		US 2009-0044980 A1	19/02/2009
		US 2009-0044981 A1	19/02/2009
		US 2009-0188720 A1	30/07/2009
		US 2009-0194334 A1	06/08/2009
		US 2010-0038139 A1	18/02/2010
		US 2010-0038140 A1	18/02/2010
		US 2010-0038141 A1	18/02/2010
		US 7845430 B2	07/12/2010
		US 7971661 B2	05/07/2011
		US 8066085 B2	29/11/2011
		US 8534380 B2	17/09/2013
		US 8720604 B2	13/05/2014
		US 8727036 B2	20/05/2014
		US 8757294 B2	24/06/2014
		US 8763726 B2	01/07/2014
		US 8899352 B2	02/12/2014
		WO 2009-022114 A1	19/02/2009
		WO 2009-022115 A1	19/02/2009
		WO 2009-022116 A1	19/02/2009
		WO 2009-022117 A1	19/02/2009
		WO 2009-022128 A1	19/02/2009
		WO 2009-022145 A1	19/02/2009
		WO 2009-022146 A1	19/02/2009