(No Model.) 3 Sheets—Sheet 1.

B. T. STEBER.

MATCH MAKING MACHINE.

No. 590,077. Patented Sept. 14, 1897.

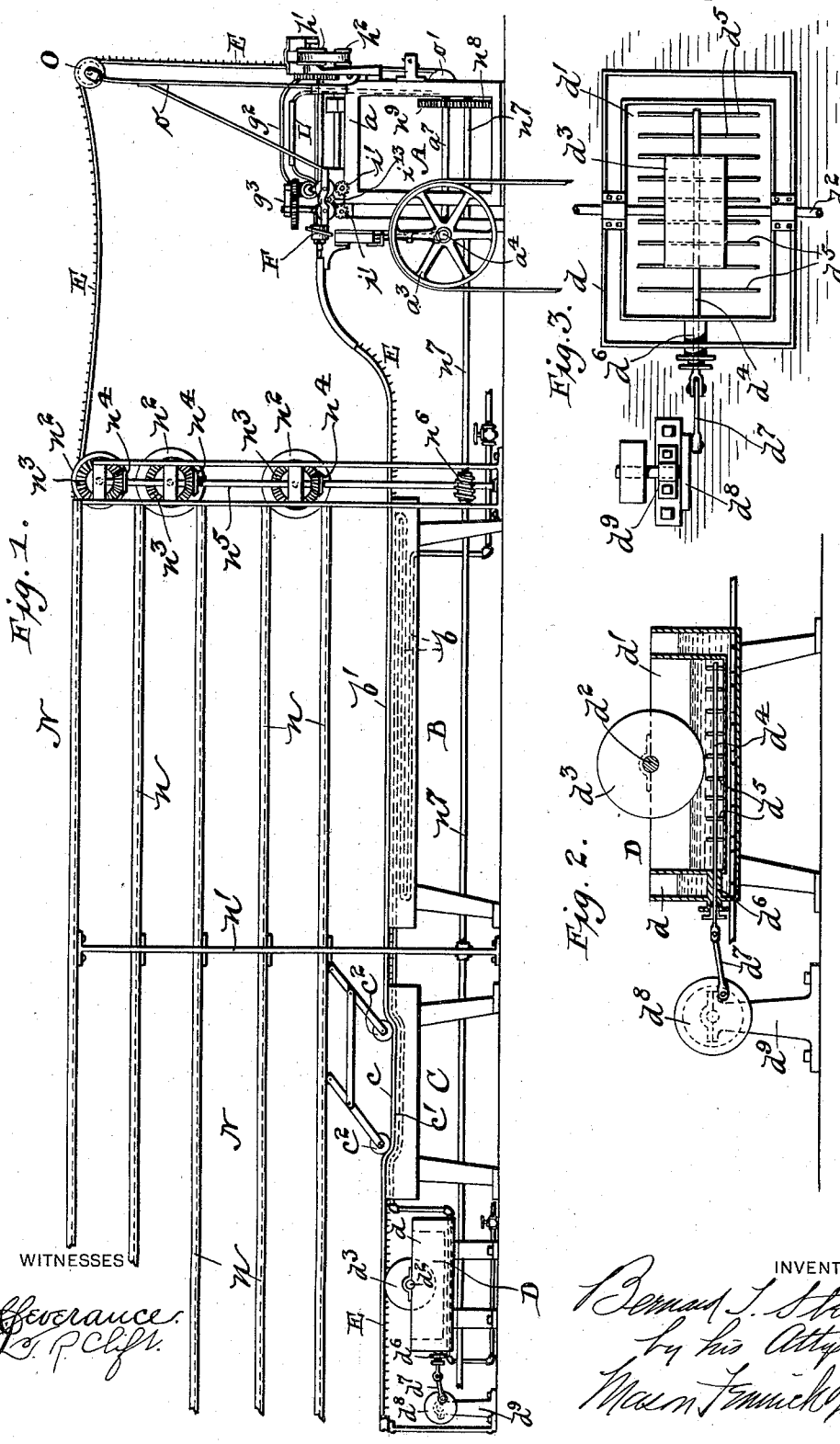

Fig. 1.

Fig. 3.

Fig. 2.

WITNESSES

Geverance.
L. S. P. Clift.

INVENTOR

Bernard T. Steber
by his Attys
Munn Fennick & Sommer

THE NORRIS PETERS CO., PHOTO-LITHO., WASHINGTON, D. C.

(No Model.) 3 Sheets—Sheet 2.

B. T. STEBER.

MATCH MAKING MACHINE.

No. 590,077. Patented Sept. 14, 1897.

Fig. 4.

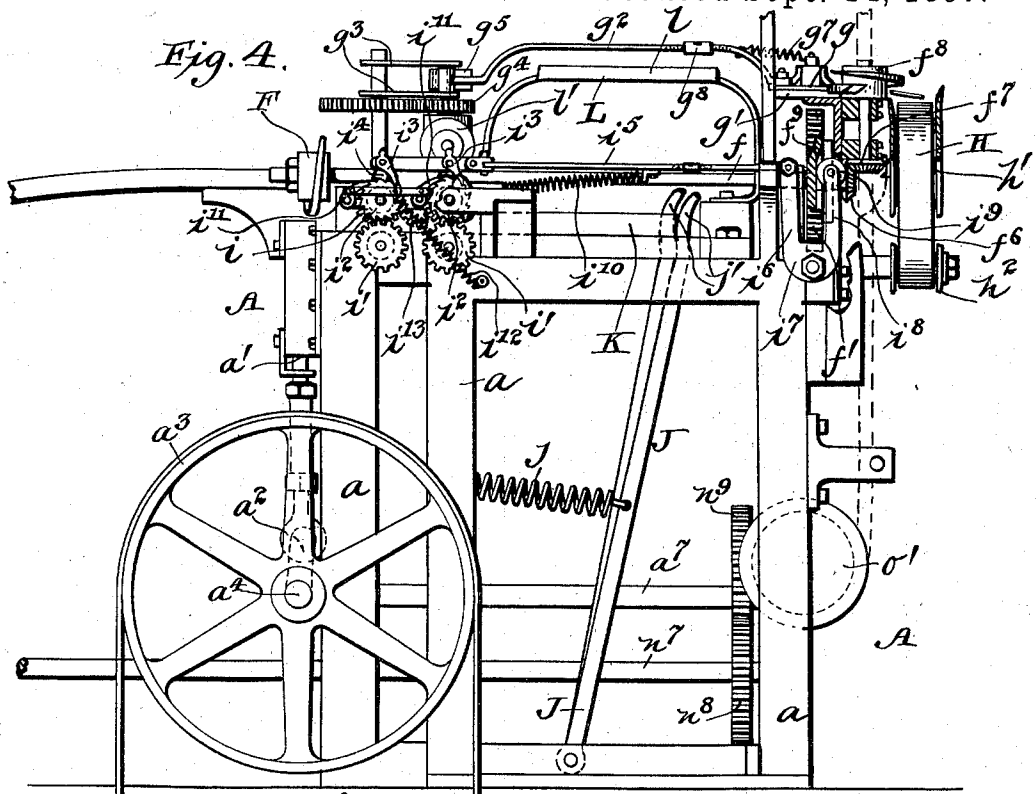

Fig. 5.

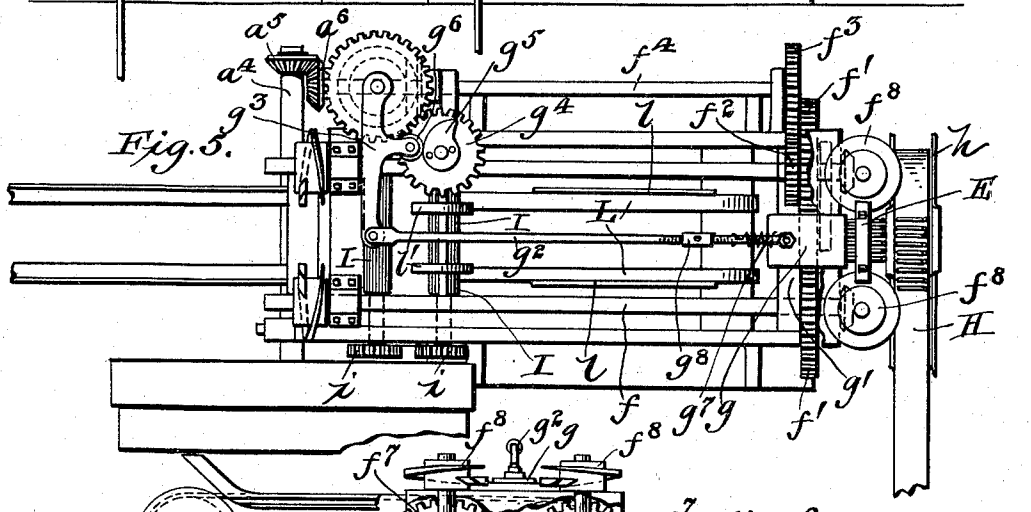

Fig. 6.

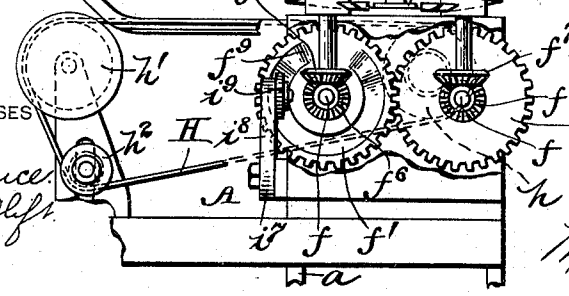

WITNESSES

Cleverance
T. P. Clift

INVENTOR

Bernard T. Steber
by his Attys
Mason Fenwick & Lawrence

THE NORRIS PETERS CO., PHOTO-LITHO., WASHINGTON, D. C.

(No Model.)

3 Sheets—Sheet 3.

B. T. STEBER.

MATCH MAKING MACHINE.

No. 590,077. Patented Sept. 14, 1897.

Fig. 7.

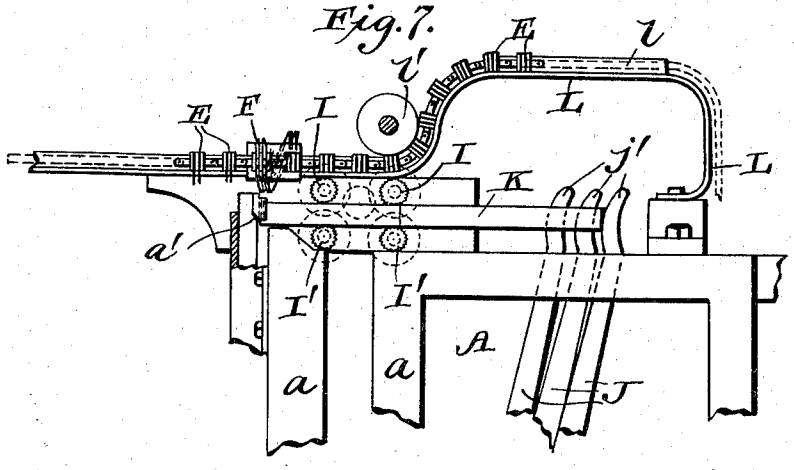

Fig. 8.

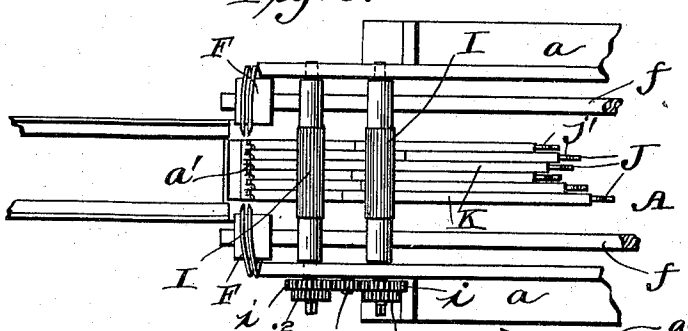

Fig. 9.

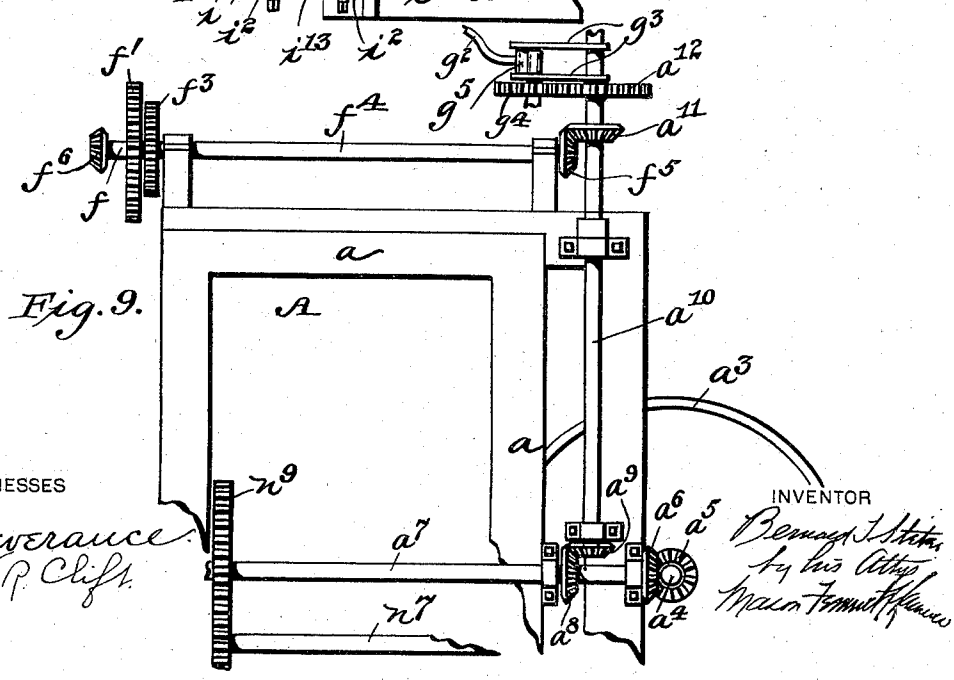

WITNESSES

Severance
C. R. Clift

INVENTOR

Bernard T. Steber
by his Attys
Mason Fenwick & Lawrence

THE NORRIS PETERS CO., PHOTO-LITHO., WASHINGTON, D. C.

UNITED STATES PATENT OFFICE.

BERNARD T. STEBER, OF UTICA, NEW YORK.

MATCH-MAKING MACHINE.

SPECIFICATION forming part of Letters Patent No. 590,077, dated September 14, 1897.

Application filed March 11, 1897. Serial No. 627,014. (No model.)

To all whom it may concern:

Be it known that I, BERNARD T. STEBER, a citizen of the United States, residing at Utica, in the county of Oneida and State of New York, have invented certain new and useful Improvements in Match-Making Machines; and I do hereby declare the following to be a full, clear, and exact description of the invention, such as will enable others skilled in the art to which it appertains to make and use the same.

My invention relates to match-making machines, and more particularly to that class of machines which embody match-splint-carrying chains for receiving the match-sticks from a cutter, heating, paraffining, and supplying the same with suitable igniting-heads and delivering the completed matches at the proper time.

It consists in certain novel constructions, combinations, and arrangements of parts, as will be hereinafter fully described and claimed.

In the accompanying drawings, Figure 1 represents a side elevation of my improved mechanism for making matches, parts of the chain-carrying frame being broken away. Fig. 2 represents a vertical central section through the composition-vat. Fig. 3 is a top plan view of the same. Fig. 4 is a side elevation of the splint cutting and delivering portion of my device. Fig. 5 is a top plan view of the same, parts being broken away. Fig. 6 is a detail end elevation of a portion of the match-cutting machine. Fig. 7 is a side elevation of the same, parts being shown in section. Fig. 8 is a detail plan view showing the manner of feeding the blocks of wood to the splint-cutter, and Fig. 9 is a side elevation showing the gearing for operating the different portions of the machine.

A in the drawings represents the mechanism for cutting and delivering the match-splints, B a heater, C a paraffin-vat, and D a composition-vat.

The match-cutting device A is provided with a suitable frame a, on the front end of which is mounted a vertically-sliding cutter a', adapted to be reciprocated in a vertical direction by a crank a^2, which is actuated by a belt-wheel a^3. The cutter a' when reciprocated by the means described is adapted to cut splints from blocks of wood K, fed thereto, as will be hereinafter more fully described, and carry the said splints upward and deposit them in a suitable chain E. The chain E is preferably an endless chain and consists of a series of parallel slats adapted to hold the match-splints between them and the groups of slats, being flexibly secured to each other. In order to feed the chain forward, cams F F are mounted upon the frame a. These cams F F are carried by horizontally-arranged shafts $f\,f$. The shafts $f\,f$ are arranged longitudinally of the frame and are provided with actuating-gearing f' at the ends opposite to those carrying the cams. These gears $f'\,f'$ mesh with each other, and thus both cams are adapted to move simultaneously in opposite directions. The shaft a^4, which is provided with the crank a^2, extends across the frame of the machine and is provided at one end with a bevel-gear a^5, which meshes with a similar gear a^6. The gear a^6 is secured to the end of a horizontal shaft a^7, which is provided with another bevel-gear a^8. Meshing with the gear a^8 is a corresponding bevel-gear a^9, secured on the lower end of the shaft a^{10}, vertically mounted upon the frame a^8. The upper end of this shaft extends above the frame and is provided with another bevel-gear a^{11}, which imparts movement to a meshing gear f^5, secured to one end of a horizontal shaft f^4, mounted upon the top of the frame a. Upon the opposite end of the shaft f^4 is mounted a gear-wheel f^3, which meshes with and imparts movement to a pin f^2 upon one of the cam-shafts $f\,f$.

By means of the chain-gearing just described motion is imparted to one of the cam-shafts f and from it to the other cam-shaft through the gears $f'\,f'$. The cams are provided with spirally-arranged ribs or flanges adapted to spread the slats of the chain to receive the splints and also to feed the said chain forward between the movements of the cutter.

The shafts $f\,f$ project beyond the gears $f'\,f'$ and carry at their ends bevel-gears $f^6\,f^6$, which mesh with corresponding bevel-gears $f^7\,f^7$ upon short vertical shafts mounted upon the end of the machine in suitable bearings. These shafts carry at their upper ends spreading and feeding cams $f^8\,f^8$, similar to the cams

F F. These cams receive the chain upon its return to the cutting device, spread the slats so that the completed matches may be ejected from the chain, and help to feed forward the said chain. In order to eject the matches from the slats when they are just spread apart, I employ a platen g, sliding upon a raised platform g', upon the rear of the machine A. Secured to this platen is a bar g^2, which extends toward the forward end of the machine A and is pivotally secured between arms g^3 g^3 at one end of the same, the said arms being pivoted at their other ends upon the vertical shaft a^{10}. Below the arms g^3 g^3 a gear-wheel a^{12} is keyed to the shaft a^{10} and meshes with a gear-wheel g^4, mounted upon a short vertical shaft upon the top of the frame a. The upper end of this shaft carries a cam g^5, which engages a friction-roller g^6, mounted between the arms g^3 g^3. It will be seen from this description that upon the revolution of the cam g^5 the bar g^2 will be moved toward the forward end of the machine and the platen g be retracted from the chain E. A spring g^7, secured to a portion of the frame at one end and to the bar g^2 at the other, pulls the bar and platen in an opposite direction when the same are released by a cam g^5, the platen thus being forced against the ends of the matches in the chain E, whereby they are forced from between the slats, which have been spread apart by the cams f^8 f^8. A horizontally-moving belt H receives the matches thus ejected and conveys them to a suitable point, where they may be collected and boxed in the usual manner. The belt H is mounted upon the rollers or revolving drums h' h', mounted upon the rear end of the machine A, a discharge tension-wheel h^2 also engaging the belt H to tighten or loosen said belt as desired. The rod g^2 is preferably provided with a turnbuckle or nut g^8, by which the throw of the platen may be adjusted.

It will be seen from the drawings that I may employ cams having single flanges or double flanges, as I have shown in Figs. 1, 4, 5, and 6 cams having single flanges, and in Figs. 7 and 8 of the drawings cams employing double flanges. Either one of these forms of cams may be used without departing from the spirit of my invention.

A very important part of my invention is the manner of feeding the blocks of wood K to the cutters. To the rear of the cutter in the frame a are mounted feed-rollers delivering the blocks of wood to the cutter. These rollers are preferably four in number, the upper rollers I I being mounted so as to engage the blocks of wood upon the upper surface, and the other cutters I' I' being adapted to engage the blocks of wood on the under surface. To the ends of the shafts carrying the feed-rolls I I are secured gear-wheels i i'. The gear-wheels i i' of each pair of rolls mesh with each other, so that the rolls will be revolved in opposite directions so as to impart a corresponding impulse to the blocks K. To the outer ends of the shafts of the upper rolls I I are secured ratchet-wheels i^2 i^2, which are adapted to be operatively engaged by dogs i^3 i^3. The dogs i^3 i^3 are pivotally mounted upon arms i^4 i^4, also pivotally mounted upon the shafts of the upper rolls. A bar connects the two arms i^4. To the front end of this bar is secured a horizontal bar i^5, extending toward the rear end of the machine, where it is secured to the upper end of an arm i^6 of a U-shaped piece i^7, pivotally mounted to the frame a. The U-shaped piece i^7 is also provided with another upwardly-extending arm i^8, carrying a friction-roller i^9. The roller i^9 engages a cam-surface f^9 upon the rear face of one of the gear-wheels f'. It will thus be seen that upon the revolution of the gear-wheel f' the friction-roller i^9 will engage the cam-surface f^9 and draw back the arm i^5, causing the dogs i^3 to move the ratchet-wheels to the desired extent. The bar i^5 has secured to it a spiral spring i^{10} for moving the said bar in the opposite direction, whereby the dogs i^3 are caused to take a new hold upon the ratchet-wheels i^2 i^2. In this manner the rolls are rotated in the regular manner for feeding forward the blocks of wood K to the cutter. In order to prevent the ratchets i^2 i^2 from turning in the wrong direction, the dogs i^{11} i^{11}, pivoted to the frame, engage said ratchets, so as to prevent a backward movement of the same. A connecting-bar joins these ratchets, and a spring i^{12}, secured to the frame at one end and to the said bar at the other, operates to hold the dogs i^{11} i^{11} in constant contact with the ratchet-wheels. Sometimes it is desired to draw back the blocks of wood from the cutter when the machine is not in operation. For this purpose the ends of the shafts of the upper feed-rolls are squared, so that they may be turned by any suitable handle. In order to make both sets of the rolls turn together, a gear-wheel i^{13} is interposed between the gears i^2 i^2. The bar i^5 may be provided with an adjusting turnbuckle or nut for regulating its length, if desired.

My improved means of feeding the blocks of wood to the feed-rolls consists in using pivoted pusher-levers J J, adapted to press the blocks of wood K forward, so that they will be caught by the rotating feed-rolls. These pusher-levers J J are pivoted at their lower ends in the frame a and about midway of their length are secured to the springs j, which springs are secured at their other ends to the frame a. The upper ends of the pusher-levers J are provided with curved contacting portions j' for engaging the blocks of wood K.

I prefer to use a number of pusher-levers J, as it greatly facilitates the operation of feeding the blocks of wood K to the machine and enables me to use the blocks which have been cut from boards of various widths without interfering with the operation of the machine. For example, as shown in the drawings in Fig. 8, if six pusher-levers be used six

blocks of wood may be inserted and held in proper position without regard to the width of the boards from which they were cut. Thus if the boards were all one-inch boards each block would be forced upward by a separate lever, but if the block should be cut from a two-inch board two levers would engage the same block to force it upward. It will thus be readily seen that the push-levers readily adapt themselves to blocks cut from boards of different thicknesses. So, also, it makes no difference as to the width of the board from which the block may be cut, as it is merely necessary to pull the lever back more or less, according to the length of the block. To insert the blocks of wood K, it is only necessary to retract the inner or any one or more of the pusher-levers J and insert the block between the end of said lever and the rear end of the preceding block. In order to facilitate the feeding of the blocks of wood to the pusher-levers J, I provide a means for raising the splint-carrying chain above the level of the actuating-cams at the point immediately above the pusher-levers. As will be seen from the drawings, a frame L, mounted upon the frame *a* and provided with guiding-flanges *l*, receives the carrier-chain upon its return toward the cutter and elevates it above the pusher-levers J. This leaves a sufficient operating-space between said chain and the said levers to permit of the easy manipulation of the blocks and levers. The forward end of the frame L descends to a point within the upper roll I, so that the chain is lowered at this point to a proper level to be fed accordingly to the spacing-cams. Rollers *l'* aid in holding the carrier-chain in its proper course.

After the match-splints have been cut from the blocks of wood and deposited in the carrier-chain E they pass to the heater B, which consists of a suitable frame *b b*, provided with guideways *b'* upon its upper surface to guide the chain E, and also provided with internal heating means for heating the match-splints as they pass from the same. This heating means preferably consists of coil-pipes, as illustrated, which may be supplied with heat in any usual way. After leaving the heater B the chain passes over a paraffining-tank C. The tank C is provided on its upper surface with guideways *c* for the chain and is slightly depressed in its central portion, as at *c'*. The chain E is adapted to be depressed at this point by the rollers c^2 c^2, pivotally mounted with a suitable frame above the tank C. In this manner the match-splints are immersed in a solution of paraffin, which is contained in tank C. This tank is preferably heated by a continuation of the heating-pipe from the heater B. From the tank C the chain passes to the composition-vat D, where the matches are provided with igniting-heads of the usual kind. The composition-vat is also an important feature of my invention. It consists of an exterior water-tank *d* and an interior composition-tank *d'*. Mounted upon the top of the vat D is a cross-shaft d^2, carrying a roller d^3. The roller d^3 extends into the composition-tank *d'* and is adapted upon being revolved in any suitable manner to carry the composition upward upon its periphery and deposit the same upon the downwardly-projecting ends of the splints in the carrier E. It is very important in using the necessary composition for holding matches to keep the same in a thoroughly-agitated condition, as the ingredients of which it is composed are apt to separate quickly, so as to render the composition very ineffective.

In my improved means for agitating the composition I provide a horizontally-reciprocating agitator d^4, which consists of a central bar provided with cross-arms d^5. The cross-arms d^5 d^5 are preferably parallel and extend approximately the full width of the composition-tank *d'*. One end of the bar d^4 extends through the sides of the tanks *d' d*, a packing-box d^6 surrounding the same at this point to prevent any leakage from the tanks. The outer end of the bar d^4 is connected to a pitman d^7, which is secured to a wrist upon the face of a rotating disk d^8. The disk d^8 is mounted upon a suitable shaft provided with a belt-wheel of ordinary construction, and the said shaft is supported upon a standard d^9. It will be apparent from this construction that by rotating the disk d^8 the agitator in the composition-vat will be reciprocated and the contents of the vat thoroughly agitated by the same. A heating-pipe is passed through the water-tank D in order to heat the water in the same, which in turn keeps the composition in the tank *d'* at the proper degree of temperature. After being headed with igniting composition the matches are carried back and forth in the drying-frame before they are returned to the discharging mechanism. This frame N consists of parallel guiding-shelves *n*, supported upon suitable standards *n'*, and in passing from one of said shelves to the other at the ends thereof the chain travels about pulleys or flange-wheels, as n^2. The wheels n^2 are adapted to be rotated by being provided with bevel-gears n^3 n^3, which mesh with corresponding bevel-pinions n^4, mounted upon vertical shelves, as n^5. These shelves are provided with worm-wheels at their lower ends, which are adapted to mesh with corresponding worms n^6, upon a horizontal shaft n^7, running the whole length of the frame in the lower part thereof. The shaft n^7 also extends into the frame of the machine A and is provided with a gear-wheel n^8, which meshes with a gear-wheel n^9, mounted upon the shaft a^7 of the said machine A. By means of this connecting-gear motion is imparted to the shaft n^7 from the power-shaft of the machine A. From the top shelf of the drying-frame N the carrier-chain E passes to a roller O, mounted upon a frame *o*, secured to and extending a considerable distance above the frame *a* of the machine A. Thence the chain descends to the cams f^8 f^8, where the matches

are discharged from said carrier-chain, whence it passes down and around the rollers *o'*, mounted on the frame *a*, and upwardly to the frame L, over which it is led again to the cutting and feeding device.

From the above description it will be observed that I am enabled to produce matches, cutting them from the initial blocks, providing them with suitable heads, and discharging them in a dried and completed condition in a very simple and yet effective manner and that the parts of my machine are well adapted for easy manipulation and satisfactory results.

Having now described my invention, what I claim as new, and desire to secure by Letters Patent, is—

1. In a match-making machine, the combination with a reciprocating cutter for cutting match-splints, of a feeding mechanism for delivering blocks of wood to said cutter consisting of upper rolls and lower rolls, gear-wheels secured to the ends of said rolls whereby the upper and lower rolls are moved simultaneously, ratchet-wheels secured to the shafts of the upper rolls and ratchet-dog holders swinging loosely upon the feed-roll shafts, a link for connecting the said holders, and connections for reciprocating said link from a face-cam on a gear of the chain-feeding mechanism, substantially as described.

2. In a match-making machine, the combination with a reciprocating cutter, of feed-rolls for delivering blocks of wood to the said cutter, and independent pusher-levers adapted to push or force a series of independent lines of blocks of wood up to the feed-rolls, each lever being pivoted in the frame at one end, and adapted to engage a line of blocks at the other, and means tending to force said levers toward the feed-rolls, substantially as described.

3. In a match-making machine, the combination with a reciprocating splint-cutter of a carrier-chain, means for feeding said chain forward consisting of cams mounted upon horizontal shafts, feed-rolls for feeding blocks of wood to the splint-cutter, a gear-wheel upon one of said cam-shafts having a cam-surface upon one of its surfaces, means for engaging said cam-surfaces connected with the feed-rolls whereby the rolls are adapted to be rotated as desired, substantially as described.

4. In a match-making machine, the combination with a reciprocating cutter, means for feeding blocks of wood to said cutter extending parallel with the length of the machine and with the line of movement of the carrier-chain, a carrier-chain adapted to receive match-splints, cams for opening said chain, a way formed upon said machine for guiding said carrier-chain, an arched frame forming a part of said way whereby the chain is adapted to be raised at a point above the feed mechanism, depressing-wheels to bring the chain into position even with the top of the bed again, whereby the action of feeding blocks to the machine is greatly facilitated, substantially as described.

5. In a match-making machine, the combination with a reciprocating cutter, of feed-rollers for delivering the blocks of wood to the said cutter and a series of pusher-levers pivotally mounted in the frame at one end and adapted to engage blocks of wood at the other end for pushing the same between the feed-rolls and springs for actuating said pusher-levers, substantially as described.

6. In a match-making machine, the combination with a reciprocating cutter and a carrier-chain, of cams for feeding the said chain forward, the said cams being mounted upon suitable shafts, feed-rolls for delivering the blocks of wood to said cutter, ratchets upon the shafts of said feed-rolls, dogs for engaging said ratchets, a U-shaped lever secured to the frame of the match-machine and connected to said dogs, a cam formed upon one face of the gear-wheel mounted upon one of the cam-shafts, said cam being adapted to engage one arm of the U-shaped lever whereby the dogs are actuated to move forward the feeding-rolls and a spring for retracting the said dogs, substantially as described.

7. A composition-vat for supplying igniting-heads to the matches comprising a tank for holding the said composition, a roller adapted to work in said vat for carrying composition to the match-splints, said roller being narrower than the said vat, and a reciprocating agitator adapted to scrape the bottom of the said tank and the bottom of the said roller, the said agitator extending beyond the sides of the roller for allowing the escape of the composition in the process of agitation, and means for operating the said agitator, substantially as described.

8. A composition-vat comprising in its construction a tank for holding composition, a roller adapted to operate in said composition, a reciprocating agitator interposed between the roller and the bottom of the tank for scraping the bottom of the tank and the bottom of the roller, the said agitator extending beyond the sides of the roller but not touching the sides of the tank whereby space is allowed for the escape of the composition at the sides of the roller and means for operating the said agitator, substantially as described.

9. In a match-machine, a composition-vat, a roller revolving in said vat, and an agitator which reciprocates at right angles to the axis of the roller and fitting between the roller and the bottom of the vat, the said agitator comprising blades which extend beyond the sides of the roller to allow for the escape of the material in the process of agitation, substantially as described.

10. In a match-machine, the combination with a carrier-chain adapted to receive and carry match-splints, means for ejecting the completed matches from said chain comprising a platen, a cam for withdrawing the platen from proximity to the chain and a spring to

force the platen against the splints to knock them out of said chain, substantially as described.

11. In a match-making machine, the combination with a splint-cutter, means for heating paraffining and providing the said splints with igniting-heads, of means for drying the same consisting of a frame mounted on vertical standards and having a series of horizontal shelves for supporting and guiding the carrier-chain rollers at the end of said shelves for assisting the chain forward in its travel, means for operating said rollers and means for delivering the completed matches, consisting of a platen adapted to be moved in one direction by a cam and a spring for actuating it in the opposite direction to force out the matches, substantially as described.

In testimony whereof I hereunto affix my signature in presence of two witnesses.

BERNARD T. STEBER.

Witnesses:

LEONARD VAN BOOSTEN,

GEO. M. RABENSTEIN.