J. R. STARK.

MAGNETO.

APPLICATION FILED JAN. 9, 1919.

1,321,158.

Patented Nov. 11, 1919.

5 SHEETS—SHEET 1.

Fig. 1

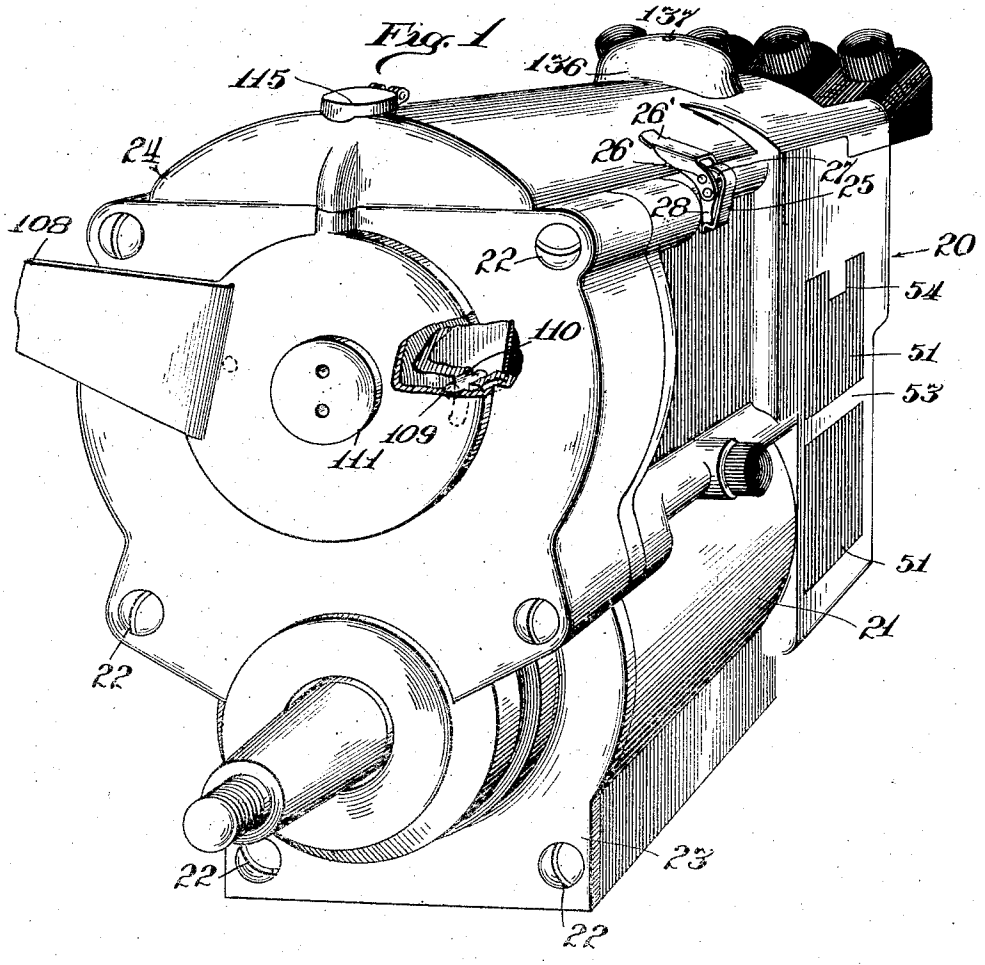

Fig. 11.

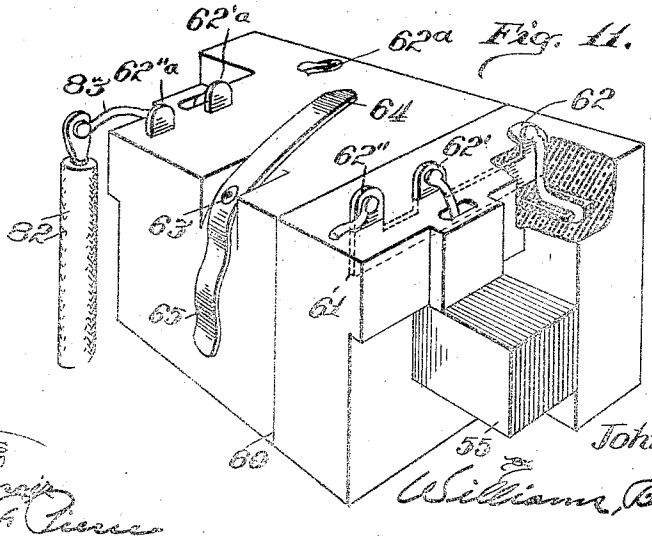

Witnesses
Milton Lenzie
Earl F. Pierce

Inventor
John Roy Stark
By
Williams, Bradbury & Lee
Attorneys

J. R. STARK.

MAGNETO.

APPLICATION FILED JAN. 9, 1919.

1,321,158.

Patented Nov. 11, 1919.

5 SHEETS—SHEET 2.

Fig. 2.

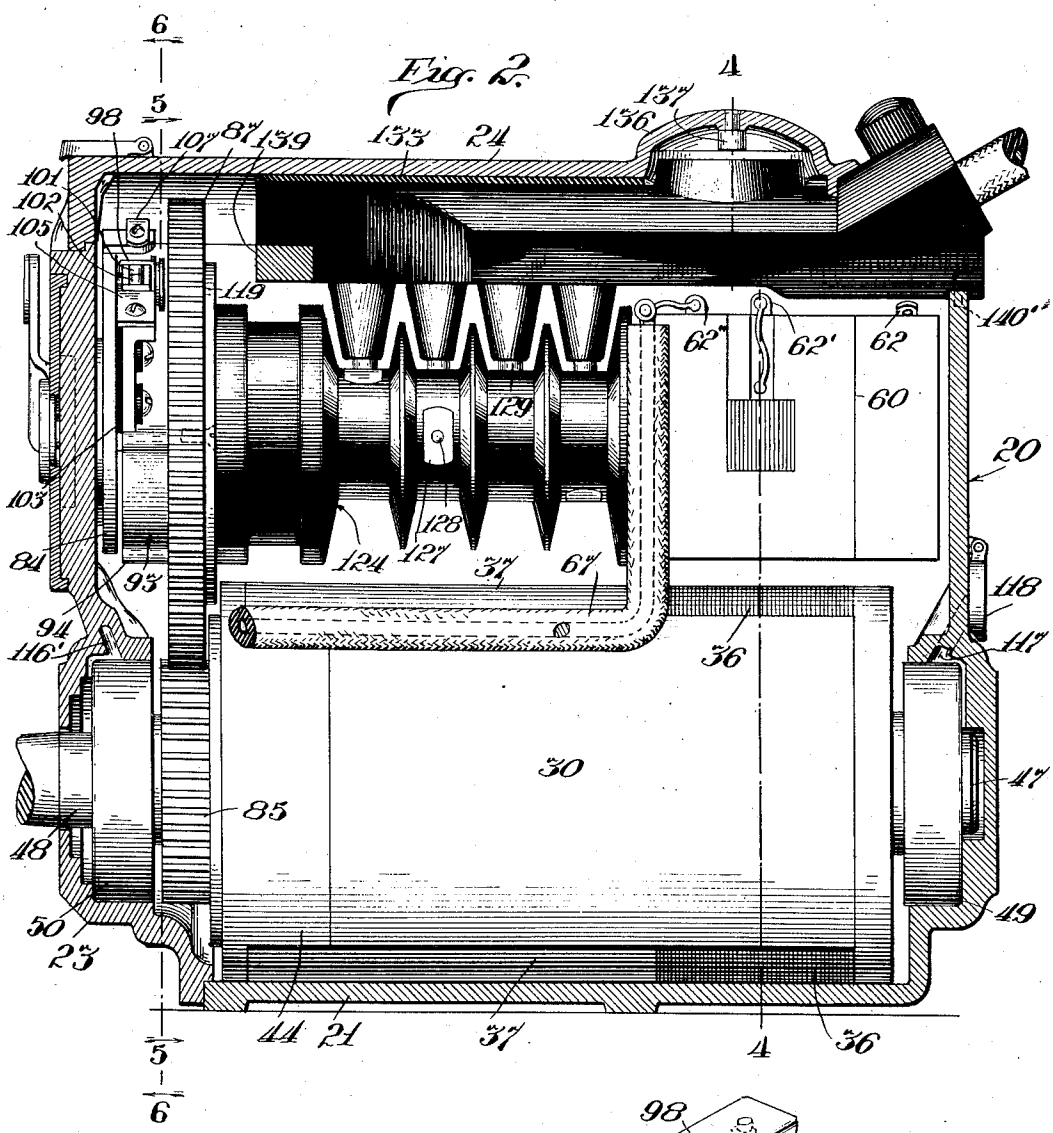

Fig. 10.

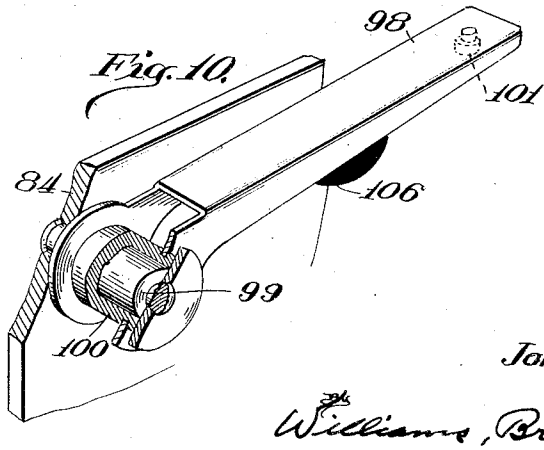

Witnesses

Milton Lenox

Earl F. Lucas

Inventor

John Roy Stark

Williams, Bradbury & Lee

Attorneys

J. R. STARK.

MAGNETO.

APPLICATION FILED JAN. 9, 1919.

1,321,158.

Patented Nov. 11, 1919.

5 SHEETS—SHEET 3.

Fig. 5.

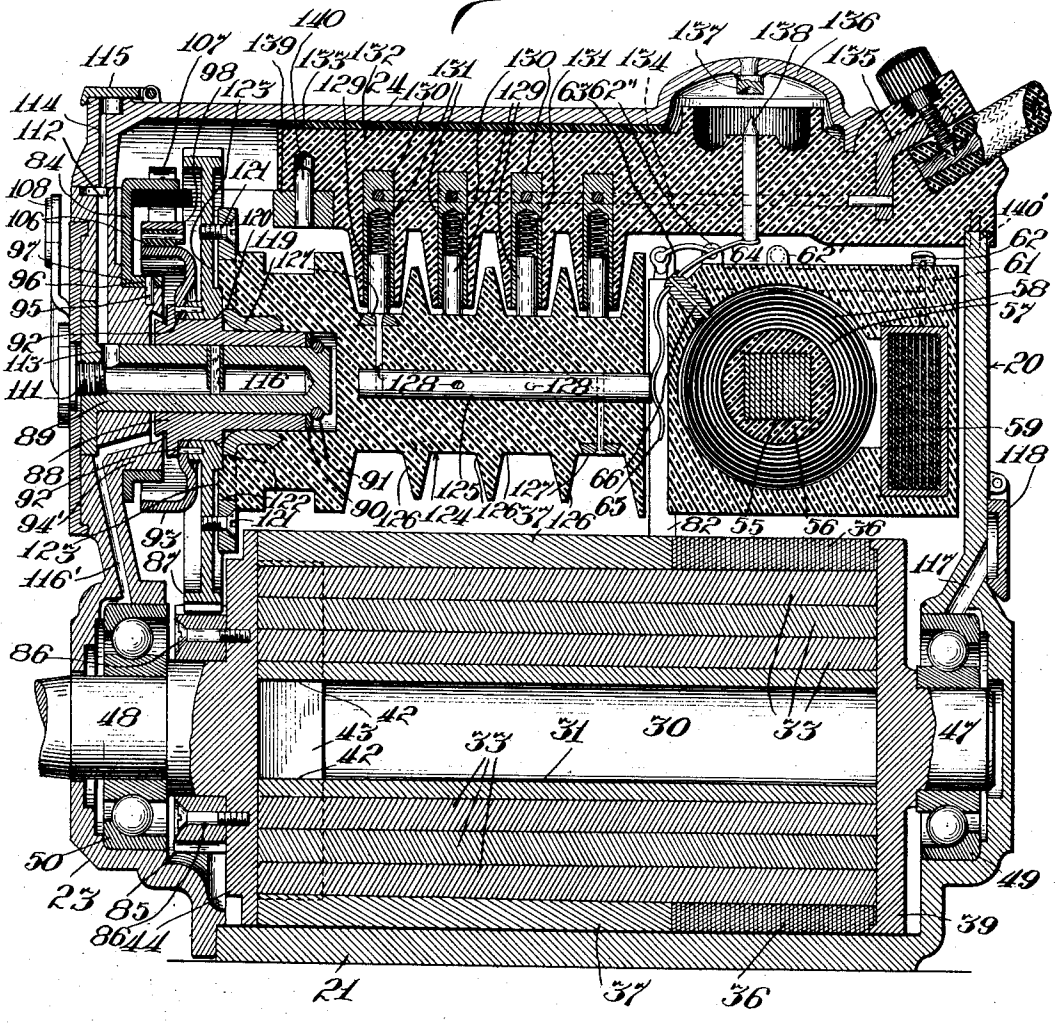

Fig. 9.

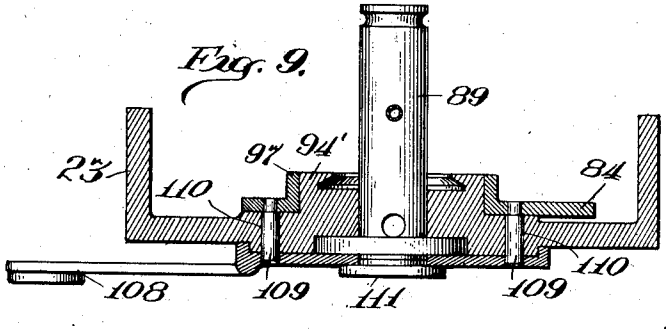

Witnesses
Milton Lenoir
Earl G. Pierce

Inventor
John Ray Stark

By Williams, Bradbury & Lee
Attorneys.

J. R. STARK.

MAGNETO.

APPLICATION FILED JAN. 9, 1919.

1,321,158. Patented Nov. 11, 1919.

5 SHEETS—SHEET 4.

Fig. 12.

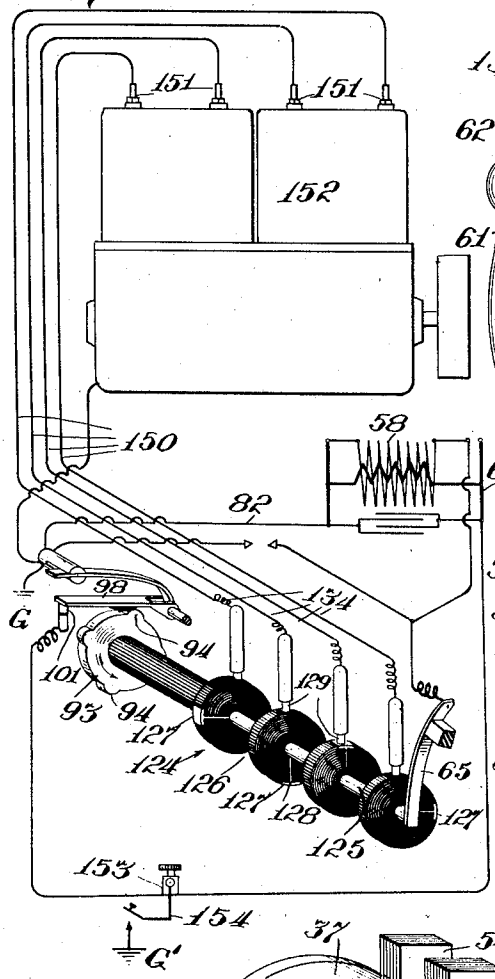

Fig. 4.

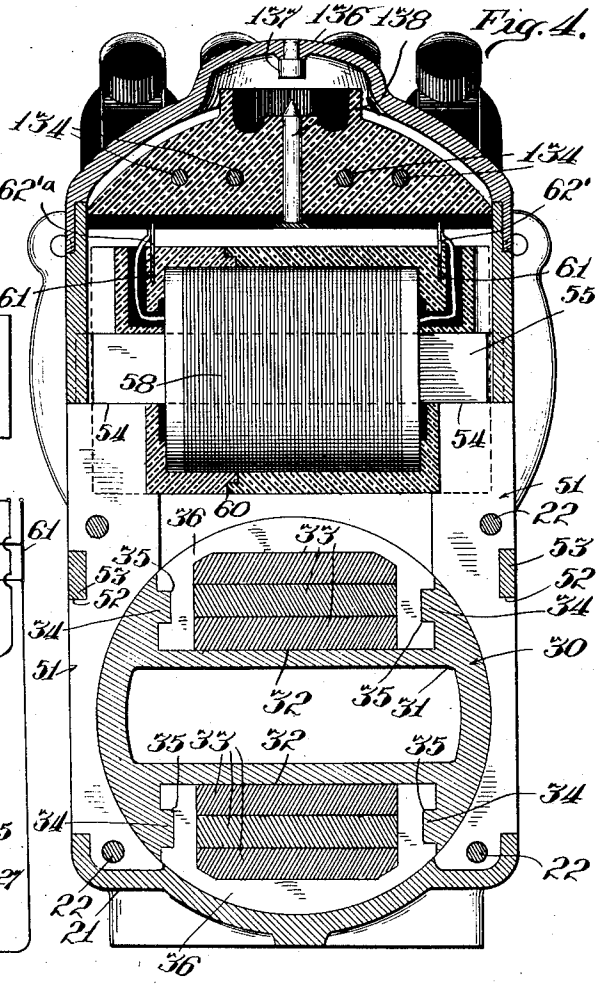

Fig. 7.

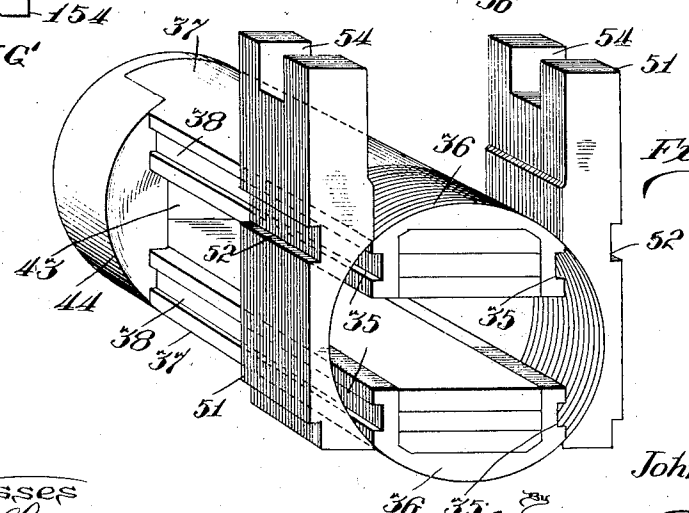

Witnesses
Milton Lenox
Earl F. Pierce

Inventor
John Roy Stark
By
Williams, Bradbury & Lee
Attorneys

J. R. STARK.

MAGNETO.

APPLICATION FILED JAN. 9, 1919.

1,321,158.

Patented Nov. 11, 1919.

5 SHEETS—SHEET 5.

Fig. 8.

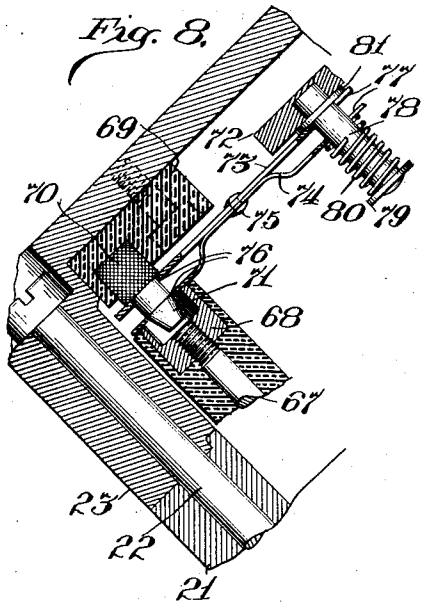

Fig. 5.

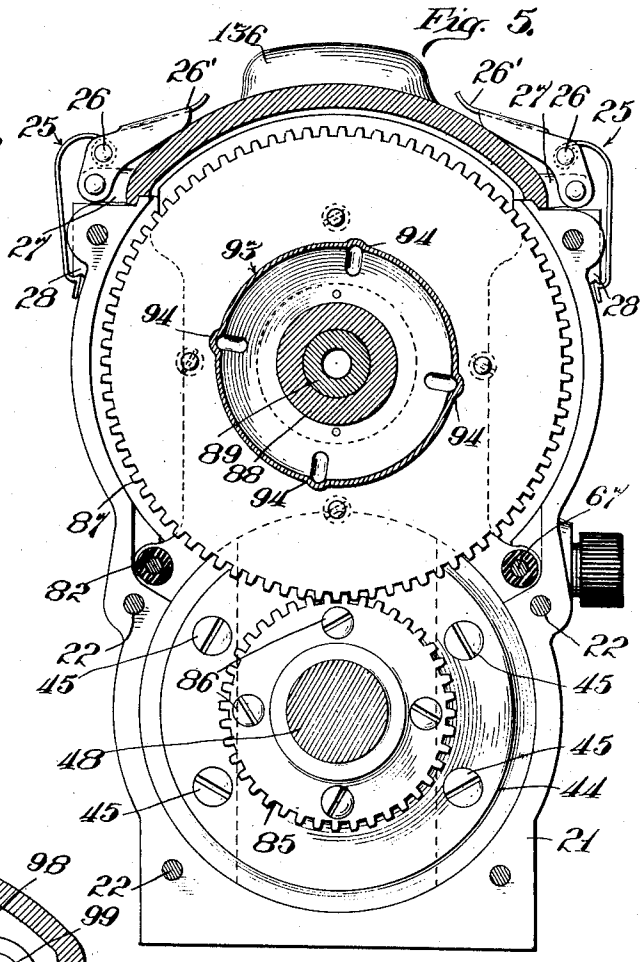

Fig. 6.

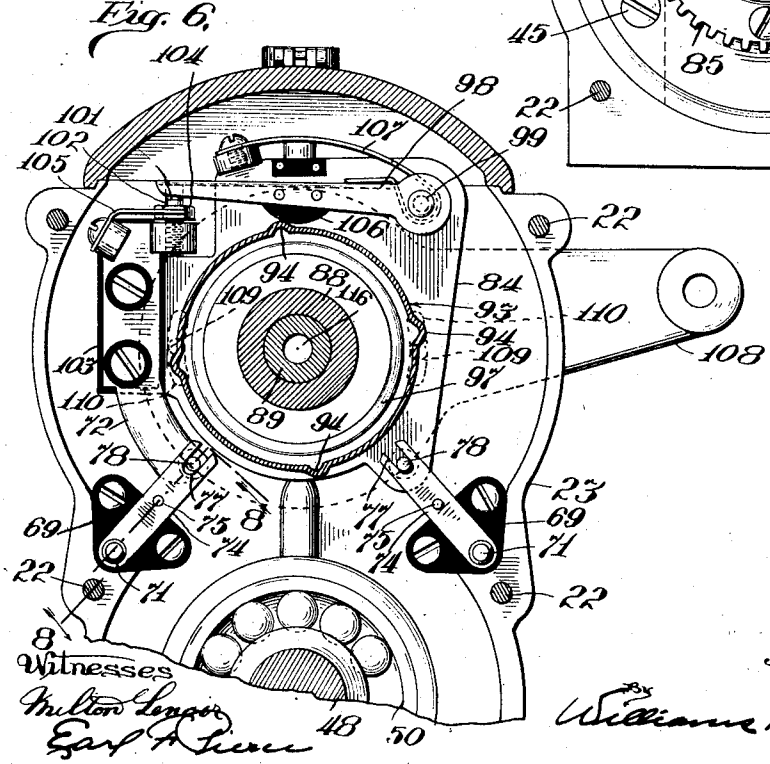

Witnesses

Milton Logan

Earl A. Pierce

Inventor

John Roy Stark

By Williams, Bradbury & Lee

Attorneys

UNITED STATES PATENT OFFICE.

JOHN ROY STARK, OF RACINE, WISCONSIN, ASSIGNOR TO WEBSTER ELECTRIC COMPANY, OF RACINE, WISCONSIN, A CORPORATION OF WISCONSIN.

MAGNETO.

1,321,158. Specification of Letters Patent. Patented Nov. 11, 1919.

Original application filed December 8, 1917, Serial No. 206,151. Divided and this application filed January 9, 1919. Serial No. 270,263.

To all whom it may concern:

Be it known that I, JOHN ROY STARK, a citizen of the United States, residing at Racine, in the county of Racine and State of Wisconsin, have invented a certain new and useful Improvement in Magnetos, of which the following is a full, clear, concise, and exact description, reference being had to the accompanying drawings, forming a part of this specification.

This invention relates to improvements in magnetos, and is particularly concerned with that type of magneto in which a movable inductor is employed for quickly creating and reversing the flux in a field member which is in inductive relation with the generating winding. Certain features of my invention are, however, capable of being utilized or employed in connection with magnetos of other types. In commercial magnetos of the type to which I have referred it has heretofore been the general practice, so far as I am aware, to employ a field structure comprising a permanent magnet in combination with an inductor of soft iron for reversing the direction of the field with respect to a generating coil. Revolving permanent magnets have also been employed in connection with stationary generating coils and it is one object of my invention to provide an improved magneto of this type. In my improved magneto I construct the field circuit or members of soft iron and employ a pivotally mounted permanent magnet for building up a flux in the field circuit and for suddenly reversing the direction of this flux.

Another feature of my invention resides in the relative arrangement of the inductor, the distributer spool and brushes, and the generating coil, and also the relative arrangement of the interrupter mechanism with regard to the remaining elements.

In prior structures these parts have been so arranged that it is practically impossible to gain access to some of these several parts without practically dismantling the magneto. In my improved magneto I have so arranged these parts relative to one another that they all become accessible by merely removing a cover which forms a part of the magneto casing.

Some of the objects of my invention are then:

To provide a magneto in which those elements which it is frequently necessary to inspect or replace in case of damage are easily accessible and removable without disturbing the remaining elements;

To provide a magneto in which the interrupter mechanism is easily accessible for adjustment; and

To so construct the field structure of the magneto that the generating coil or coils may be easily and quickly detached therefrom for the purpose of inspection or repair.

Further objects will appear in the description of my improved magneto, reference being had to the accompanying drawings in which:

Figure 1 is a perspective view of my improved magneto, portions thereof being broken away;

Fig. 2 is a vertical longitudinal section through the casing of my magneto, the inductor, generating coils, distributer spool and block and certain other elements, being shown in elevation;

Fig. 3 is a vertical central longitudinal section;

Fig. 4 is a transverse section taken on the line 4—4 of Fig. 2;

Fig. 5 is a transverse section taken on the line 5—5 of Fig. 2;

Fig. 6 is a similar section taken on the line 6—6 of Fig. 2;

Fig. 7 is a more or less diagrammatical perspective view showing the field pieces and portions of the inductor in operable relation therewith;

Fig. 8 is an enlarged sectional detail view taken on a line corresponding to line 8—8 of Fig. 6 showing details of the connection between the primary winding and the timing plate;

Fig. 9 is a sectional detail view showing certain details of the timing mechanism;

Fig. 10 is a perspective view of the inter-

rupter lever, portions thereof being broken away to show the manner in which it is pivotally mounted upon the timing plate;

Fig. 11 is a perspective view of what might be termed the generating unit, portions thereof being broken away to more clearly disclose the structure; and

Fig. 12 is a diagram showing the connections which I employ in my magneto.

Similar reference characters refer to similar parts throughout the several views.

Referring to the drawings, and especially to Fig. 1, the reference character 20 indicates as a whole the casing which comprises a body member 21 having four sides, namely, the bottom, the two side walls, and one end wall of the casing. Secured to the opposite end of the body member by screws 22 is an end plate 23. The upper side of the casing is formed by a cover 24 which is held in place by means of the spring catches 25, the upper ends of which are pivotally secured to the pins 26 carried by the toggle levers 26′, which are in turn supported by the lugs 27 on the cover. The lower ends of these catches engage with undercut lugs 28. It is to be understood, however, that I may employ other means for securing the cover to the casing.

Referring now to Figs. 2, 3, 4, and 7, the reference character 30 indicates as an entirety the inductor which comprises a hollow cylindrical core 31 having oppositely disposed longitudinal grooves 32 cut in the periphery thereof for receiving the bar magnets 33. In the drawings I have illustrated three of these bar magnets in each of the grooves, but it is to be understood that this number may either be increased or decreased as found desirable. The bar magnets in each of these sets are arranged with like poles adjacent each other, but the opposed or adjacent poles of the two sets are of opposite polarity.

From an inspection of Figs. 7 and 8 it will be seen that I have provided longitudinal ribs 34 on each of the side walls of the grooves 32. These ribs are received by notches 35 in the sides of U shaped laminations 36 which inclose the ends of the bar magnets at one end of the inductor. These laminations are formed of soft iron or steel to increase the permeability of this portion of the magnetic circuit. In order to hold the bar magnets securely onto the core member I provide a pair of cover plates 37 which are U shaped in cross section and provided with grooves 38. The lower sides of the cover members are very slightly tapering so that when they are driven in place above the bar magnets they exert a clamping action upon the same. Furthermore, when the cover members are forced into place one end of the same engages with the laminations 36 and tends to force them against the cap 39 which is secured to the adjacent end of the core by means of screws, not shown, which are received in the openings, not shown, in the cap and core respectively, thereby preventing any longitudinal displacement of the laminations. The opposite end of the core member is provided with lugs 42 of the same width as the bar magnets. These lugs and the projecting ends of the bar magnets are received in a transverse groove 43 in the head 44. The head 44 is secured to the core member by means of screws, not shown, which are received in the head and engage with the threads of openings in the core. The cap and head are provided with trunnions 47 and 48 respectively, which are journaled in ball bearings 49 and 50 respectively, (see Fig. 3), at opposite ends of the casing, the bearing 50 being supported in the end plate 23 through an opening in which the trunnion 48 extends in order to be connected with the driving means.

I preferably cast the casing of my magneto and at the same time I cast the casing I prefer to mold it about the laminated pole pieces 51, which, as shown in Fig. 4, are provided with notches 52 into which the metal of the casing flows to form bars 53, which securely anchor the pole pieces to the casing. The opposed lower faces of the field pieces are provided with circular recesses for receiving the cylindrical walls of the core and the laminations 36. The upper ends of the pole pieces are provided with alined notches 54 which receive the ends of the laminated yoke 55. The ends of the yoke 55 fit snugly within the notches 54 so as to decrease the reluctance of the joints between the field pieces and the ends of the yoke as far as possible. This yoke forms a portion of what might be termed the generating unit of my magneto. As shown in Fig. 3, the yoke is surrounded by a sleeve of insulating material 56 upon which is wound a primary and a secondary coil 57 and 58 respectively, the secondary coil preferably being placed around the primary coil, although it is to be understood that the primary coil may be upon the outside or that the primary and secondary coils may be made in sections and placed side by side. In making this generator coil the primary and secondary coils, as well as the condenser 59, are inclosed in a two-piece casing of insulating material, the dividing line between the two portions being indicated at 60 in Fig. 4, which is then sealed together to provide a moisture proof casing for the generating coils. Embedded in the casing at each end of the top side thereof is a terminal member 61 having three upstanding lugs 62, 62′, and 62″ respectively. The opposite ends of the condenser and primary winding are connected with the lugs 62^a and $62^{a'}$ respectively. One end of the secondary wind-

ing is also connected to the common terminal shown at the left-hand end of Figs. 4 and 11. Extending through the wall of the insulating casing for the generating coils is a hollow metal plug 63 to the outer end of which is riveted, or otherwise connected, a spring contact having the oppositely extending arms 64 and 65. The other terminal 66 of the secondary winding extends through the hollow plug 63 in contact therewith, the outer end being soldered or otherwise secured to the plug. A comparatively heavy terminal conductor 67 is connected with the right-hand terminal member shown in Fig. 11 and extends toward the end plate 23, its free end being provided with a cup-shaped connecting member 68 which is screwthreaded upon the conductor 67. Secured to the end plate 23 is an insulating block 69 which carries a connecting member 70 having a tapered end 71 that is received within the cup-shaped depression in the connecting member 68. In order to provide connections between the interrupter contact support 72, which is mounted upon the timing plate, and the connecting member 70 which will permit of a limited movement or rotation of the timing plate I provide a spring connecting member which comprises the two spring members 73 and 74 which are riveted together at their centers, as shown at 75, but have their ends spaced apart and provided with alined openings 76 which receive the end of the connecting member 70.

As shown in Fig. 8, the end of the connecting member 68 bears against one of the spring arms of the spring 74, whereby electrical connection is established between the right-hand terminal member 61 and the interrupter contact support 72 so that the connection between the spring arm 76 and the connecting member 68 is broken by merely removing the latter member. In other words, this is a quick detachable connection. The arms at the other end of the spring connecting member are provided with alined slots 77 which receive a pin 78 that is riveted to the contact supporting member 72. The free end of the pin 78 is provided with a washer 79 between which and the spring arm of the spring 74 is confined a spring 80 which serves to hold the spring arm of the spring 73 in close electrical contact with a shoulder 81 on the pin. A terminal conductor 82 similar to the conductor 67 is connected with the lug 62″ of the left-hand terminal member in Fig. 11 by means of a conductor 83, although it is to be understood that this terminal conductor may be directly connected with the lug 62″ or any other portion of the terminal member of which the lug 62″ is a part. The opposite end of the terminal conductor 82 is provided with means for connecting it with the timing plate 84, which is the same in all respects as the connection between the conductor 67 and the contact supporting member 72. Consequently this connection will not be described in detail.

Mounted upon the trunnion 48 is a pinion 85 which is secured by means of screws 86 to the end of the head 44. The pinion 85 meshes with a spur gear 87 which is rigidly mounted upon the sleeve 88 (see Fig. 3). The sleeve 88 is rotatably mounted upon a stud shaft 89 which extends through a suitable opening in the end plate 23 in parallel relation with the trunnions 47 and 48. A washer 90 and a split ring 91 prevent inward movement of the sleeve 88 along the shaft 89. Secured to the gear 87 by the pins 92 between the end plate 23 and the said gear is a timing cam 93 having the cams 94 on the periphery thereof. The timing plate 84 is rotatably mounted upon an inwardly projecting boss 94′ which projects inwardly from the end plate 23 and is retained thereon by means of a pin 95 which is received by a slot 96 in the flange 97 of the timing plate. An interrupter lever 98 is pivotally mounted at one end upon the timing plate 84, as shown in Figs. 6 and 10, the pivot being formed by a pin 99 which is riveted to the timing plate and which forms a journal for the sleeve 100 which is secured to the end of the interrupter lever. The opposite end of the lever 98 is provided with a contact 101 which co-acts with the contact 102 (see Fig. 6) carried by the contact supporting member 72 which is insulated from the timing plate 84 by insulation 103. The contact 102 is screwthreaded into the support 72 and provided with a head 104 by means of which it can be adjusted. It is retained in its adjusted position by means of a locking bar 105. The interrupter lever 98 is provided intermediate its ends with a cam block 106, which is engaged by the cams 94 to separate the contacts 100 and 102 whereby the primary circuit is interrupted. The interrupter is urged to its closed position by means of a spring 107 in a manner which will be clearly understood from inspection of Fig. 6.

Referring to Figs. 1, 6, and 9, the reference character 108 indicates the timing lever which is provided with pins 109 which extend through slots 110 in the end plate 23 and are riveted to the timing plate 84. By this arrangement when the timing lever 108 is oscillated the timing plate 84 is likewise oscillated about its pivot point so as to carry the interrupter lever 98 to shift the cam block 106 relative to the cams 94 in order to either advance or retard the firing. The timing lever 108 is rotatably mounted upon the shank of the screw 111 which is threaded into the outer end of the shaft 89. The shaft 89 is hollow and communicates with

an oil duct 112 through a port 113, the cover 24 being provided with an oil duct 114 which forms a continuation of the duct 112 in the end plate 23 and is provided with a suitable hinged cover 115. A wick 116, which extends through the wall of the hollow shaft 89, conveys the oil from the interior of the shaft to the exterior thereof. An oil duct 116′ also leads from one end of the sleeve 88 to the ball bearings 50 whereby the oil dripping from the end of this sleeve is used for lubricating the said ball bearings. The ball bearings at the opposite end of the casing are lubricated by means of a duct 117 which is provided with a closure 118 hinged to the casing. A sleeve 119 surrounds the inner end of the sleeve 88 and is provided with a flange 120 which is secured to the inner side of the gear 87 by means of screws 121. This flange is provided with openings 122 into which projecting bosses 123 of the distributer spool 124 are formed when the distributing spool is molded, this spool being made of suitable insulating material. Extending longitudinally through the center of the distributer spool 124 is a metal rod 125, one end of which extends beyond the inner end of the distributer spool and contacts with the spring contact 65, which, as described above, is connected with one terminal of the secondary winding. The distributer spool 124 is provided with a plurality of annular grooves 126 at the bottom of which are located contacts 127 which are connected with the rod 125 by means of conductors 128. The contacts 127 are successively spaced 90° from each other, inasmuch as this magneto is intended to supply the current to a four cylinder engine. In the event that the number of cylinders is greater or less than four this spacing will be correspondingly decreased or increased.

The brushes 129 are slidably mounted in sleeves 130 and held against the bottoms of the grooves 126 by means of springs 131. The sleeves 130 are embedded in a distributer block 132 of insulating material which is carried by the cover 24. A strip of felt 133 is inserted between the block 132 and the cover 24 to hold the distributer block firmly in place. Each of the sleeves 130 is connected by means of a conductor 134 with a binding post 135 which is embedded in one end of the insulating block 132. These binding posts provide means for connecting the distributer brushes 129 with their respective spark plugs. The cover 24 is provided with convex concave boss 136 from the inner side of which projects a safety gap electrode 137, which co-acts with a second electrode 138 which is embedded in a distributer block and contacting with the spring arm 64 which is connected with one terminal of the secondary, as described above. The electrode 137 being connected with the grounded terminal of the secondary and the electrode 138 being connected with the opposite terminal thereof the gap between these two electrodes provides a safety spark gap. A bar 139 extends between the upper edges of the side walls of the casing and is provided with a pin 140 which is received in a depression in the lower side of the block 132, and a similar pin 140′ is carried by the opposite end of the casing and likewise co-acts with a depression in the lower side of the block 132 to center the block and the cover relative to the casing.

It is thought that the operation of my magneto will be clear from the above description, and it will consequently only be briefly referred to.

When the permanent magnet is positioned so that the laminations 36 are adjacent the pole pieces,—that is, when the permanent magnet is at right angles to the position shown in Fig. 7,—the flux passes from the north pole of the magnet through the adjacent pole pieces, through the yoke 55, the opposite pole piece to the adjacent south pole, and then through the head 44 and back to the north pole. As the permanent magnet rotates, the lines of force are stretched until just before the magnet reaches the position shown in Fig. 7, when they are suddenly broken, and as the magnet continues to rotate they are again established, but in the reverse direction. The timing cams 94 are geared to the magnet through the pinion 85 and the gear 87 in such a relation that the primary current is interrupted at substantially the same instant that the field flux is broken down and reversed. This change in the direction of the field force induces the maximum possible current in the primary circuit, and when this current is interrupted by the separation of the contacts 101 and 102 it quickly dies away, thereby inducing a very high potential in the secondary winding.

Referring now to Fig. 12, this current will be considered as flowing from the secondary winding 58 through the spring contact 65 to the rod 125 of the distributer, thence through one of the conductors 128 and distributer contacts 127 to one of the brushes 129 on the distributer block. From this point the current flows through the conductors 150 to the spark plugs 151 across the spark gap to the engine frame 152. The casing of the magneto is usually grounded upon the frame of the engine, and this condition is indicated by the ground G with which the casing of the engine is connected. The timing plate 84 and the interrupter lever 98 are grounded upon the casing of the magneto, and since one end of the conductor 82 is connected with the grounding plate, the secondary current returns over this conductor to the left-hand

terminal 61 and from thence to the secondary winding. At 153 I have indicated a binding post, which is also shown in Figs. 1 and 5, which is connected with the conductor 67 and with which a conductor having a switch 154 inserted therein may be connected, the opposite end of the conductor being connected to ground as indicated at G'. By this means it is possible to short-circuit the primary winding and thereby prevent the magneto from operating.

In the above description it is to be understood, of course, that the material from which the casing of the magneto is constructed is to be of brass or some other material having very slight magnetic permeability. The same comment applies to the magnet core 31, the cover plates 37, and the cap 39.

While I have described the preferred embodiment of my invention, it is to be understood that it is not limited to the details described, but it is capable of other adaptations and modifications within the scope of the following claims.

This application is a division of my application Serial No. 206,151, filed December 8, 1917.

Having thus described my invention, what I claim as new and desire to secure by Letters Patent of the United States is:

1. A magneto comprising a casing having an opening in one side thereof, an inductor journaled in said casing at the side opposite said opening, a distributer spool detachably supported between said inductor and said opening and provided with spaced contacts on its periphery and a contact at one end thereof, primary and secondary coils removably supported between said inductor and said opening, a contact connected with said secondary coil and contacting with the end contact of said distributer spool, a pair of connecting members mounted on said casing, a pair of conductors connected to the ends of said primary winding and detachably connected with said connecting members, a cover closing said opening, an insulating block, binding posts, distributer brushes carried by said block, and connections between said binding posts and said distributer brushes embedded in said block.

2. A magneto comprising a casing having an opening in one side and an inductor journaled adjacent the opposite side, a generating coil and a distributer spool removably supported in said casing between said inductor and said opening, a cover for said openings, and brushes co-acting with said distributer spool carried by said cover.

3. A magneto comprising a casing, an inductor provided with trunnions journaled in said casing, a stud shaft secured to said casing in parallel relation to said trunnions, a pinion mounted on said inductor, a gear on said stud shaft meshing with said pinion, a timing cam secured to one side of said gear, a timing plate spool rotatably mounted on said casing, a contact carried by said plate and insulated therefrom, an interrupter lever carried by said plate and co-acting with said timing cam, a contact carried by said interrupter lever and co-acting with said first named contact, a pivotally mounted timing lever, and driving connections between said timing lever and said timing plate.

4. A magneto comprising a casing, an inductor provided with trunnions journaled in said casing, a stud shaft secured to said casing, a pinion mounted on said inductor, a gear on said stud shaft meshing with said pinion, a timing cam secured to one side of said gear, a timing plate rotatably mounted on said casing, a contact carried by said plate and insulated therefrom, an interrupter lever carried by said plate and co-acting with said timing cam, a contact carried by said interrupter lever and co-acting with said first named contact, a pivotally mounted timing lever, and driving connections between said timing lever and said timing plate.

5. A magneto comprising a casing, an inductor journaled in said casing, a shaft supported by said casing in parallel relation with said inductor, a gear on said shaft, driving connections between said gear and said inductor, a primary circuit, a movably mounted timing plate, co-acting means on said gear and timing plate for interrupting said primary circuit, and means for adjusting said timing plate.

6. A magneto comprising a casing, an inductor journaled in caid casing, a shaft supported by said casing, a gear on said shaft, driving connections between said gear and said inductor, a primary circuit, a movably mounted timing plate, co-acting means on said gear and timing plate for interrupting said primary circuit, and means for adjusting said timing plate.

7. A magneto comprising a shaft, a distributer spool mounted upon one end of said shaft and a timing lever upon the other, and means mounted intermediate said spool and lever and connected therewith for timing the spark.

8. A magneto comprising a casing having an opening in one side thereof, and an inductor mounted adjacent the opposite side thereof, a generating coil, and a distributer spool supported in the casing between said inductor and said opening, a cover for said opening, and brushes co-acting with said distributer spool, carried by said cover.

9. The combination with a field circuit comprising a pair of pole pieces mounted in spaced relation, of a generating coil sur-

rounding a portion of said field circuit, an inductor comprising a pair of permanent magnets mounted in spaced relation to rotate about an axis normal to the plane of said pole pieces with the poles at one end of said bar magnets adjacent one end of said pole pieces, distributing apparatus supported in the angle between the other end of said pole pieces and the inductor, and driving connections between said inductor and distributing apparatus.

10. The combination with a field circuit comprising a pair of pole pieces mounted in spaced relation, of a generating coil surrunding a portion of said field circuit, an inductor comprising a U shaped permanent magnet mounted to rotate about an axis normal to the plane of said pole pieces with its poles adjacent one end of said pole pieces, distributing apparatus mounted in the angle between the other end of said pole pieces and the inductor, and driving connections between said inductor and distributing apparatus.

11. A magneto comprising a rotary inductor, a stud shaft extending parallel with the axis of said inductor, a timing plate mounted to rotate about the axis of said shaft, interrupter mechanism carried by said timing plate, a timing cam rotatably mounted upon said stud shaft and co-acting with said interrupter mechanism, a distributer spool mounted upon said stud shaft, driving connections between said inductor and said interrupter mechanism and distributer spool, and means for shifting said timing plate.

12. A magneto comprising a stud shaft, a timing cam, a timing plate, and a distributer, said timing cam and distributer spool being rotatably mounted on said stud shaft.

In witness whereof, I hereunto subscribe my name this 2nd day of January, 1919.

JOHN ROY STARK.

Witnesses:
P. CANNON,
B. E. NELSON.