April 16, 1968 L. S. MICHELMAN ET AL 3,377,739

SPARKLING SPINNER

Filed Aug. 19, 1965

Fig. 1

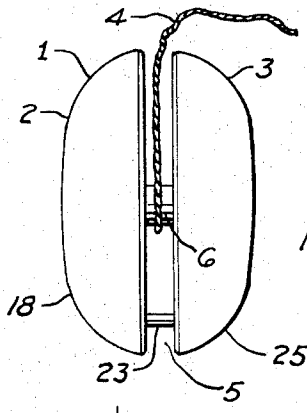

Fig. 2

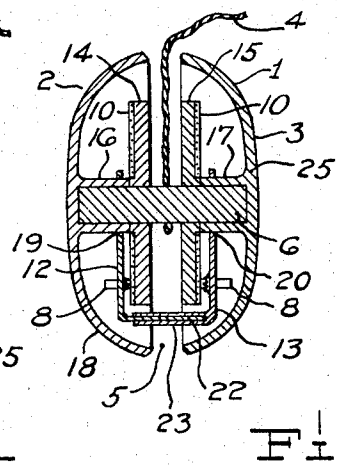

Fig. 3

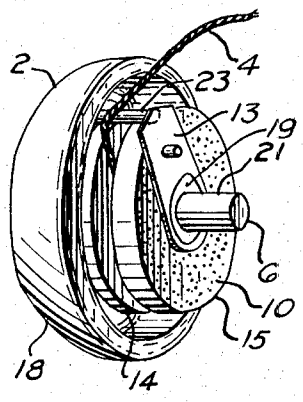

Fig. 4

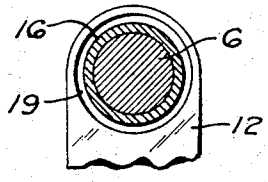

Fig. 5

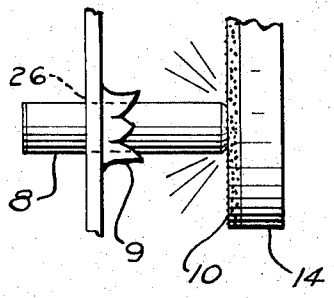

Fig. 6

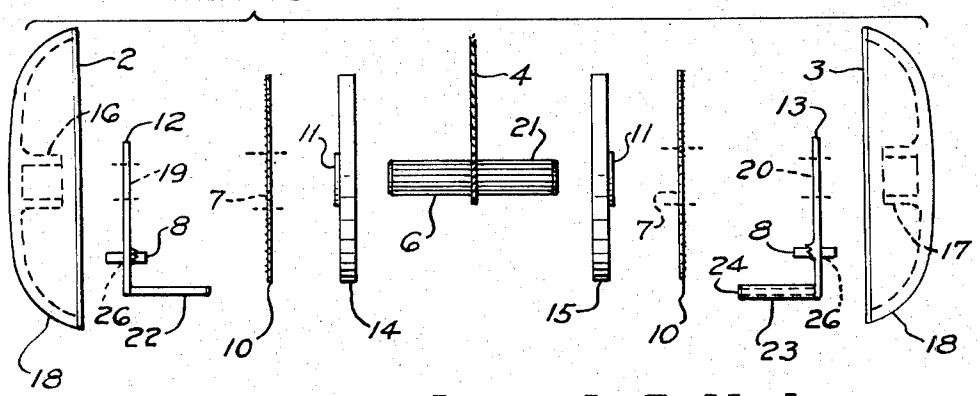

Joseph G. Huber

Leonard S. Michelman

INVENTORS

BY L. S. Michelman
atty.

United States Patent Office 3,377,739 Patented Apr. 16, 1968

3,377,739

SPARKLING SPINNER

Leonard S. Michelman, 172 Lynnwood Drive, Longmeadow, Mass. 01106, and Joseph G. Haber, 4 Manning Road, Thompsonville, Conn. 06082

Filed Aug. 19, 1965, Ser. No. 480,856
10 Claims. (Cl. 46—48)

ABSTRACT OF THE DISCLOSURE

This invention involves a toy which spins, often called a Yo-Yo. This particular invention is directed to a Yo-Yo having translucent outer shells. Mounted within the shells are flints. The flints are mounted in a novel arrangement on a U-shaped member. Discs are located proximate the flints with an emery cloth surface. The horizontal section of the U-shaped member rotates under the tension of a string, causing the U-shaped member with the mounted flints to make surface contact with the abrasive material, emitting sparks which appear through the translucency of the shells. The U-shaped member is so designed that it will not interfere with the spinning action of the Yo-Yo assembly.

This invention is concerned with toys and, more particularly, to a spinner that goes up and down on a string, often called a Yo-Yo, but has the added advantage of sparking both as it ascends and descends.

Many attempts have been made to design a sparkling spinner wherein a mechanism for causing the sparks is contained within the housing of the spinner. It has been a problem of the devices that have already been conceived that the mechanism within the spinner housing, which causes the sparking, also prevents the free motion of the spinner both in its upward and downward direction. Further, there is also the problem in maintaining the sparking at a high efficiency.

It is a principal object of this invention to generate sparks within the housing of the spinner, that can be seen from without.

It is yet an additional object of the within invention to provide a sparkling spinner that sparks from within the housing as the spinner both descends and ascends.

It is yet an additional objcet of the within invention to provide a spinner that sparks both in ascension and descension, but does not impede the motion of the spinner.

It is still an additional object of the within invention to provide a spinner that makes sparks but which does not permit the sparks to fly out therefrom as a potential source of fire or other danger.

It is yet a further object of the within invention to provide a crossbar which oscillates within the spinner upon contact with the string for operating the sparking mechanism.

It is yet a further object of the within invention to provide a rotating crossbar which provides for easier operation of the spinner.

It is still another object of the within invention to provide a crossbar that is further from the axis of rotation and, therefore, always tending to be away from the string (being bottom-heavy), eliminating any chance of becoming tangled with the string and interfering with the operation of the spinning of the toy.

It is yet an additional object of the within invention to provide a sparkling spinner in which the sparking takes place within a translucent or transparent housing.

It is a further object of the within invention to provide a sparking spinner that may be wound up without tangling.

The above and other objects, features and advantages of this invention will be more clearly understood by reference to the following detailed description and to the drawings, in which:

FIGURE 1 is an end elevational view of the sparkling spinner.

FIGURE 2 is a view similar to FIGURE 1 taken in cross-section through the middle of FIGURE 1.

FIGURE 3 is a broken away perspective view of the sparkling spinner.

FIGURE 4 is a broken away cross-section view of the connecting shaft with certain parts circumscribing same.

FIGURE 5 is a broken away view showing the flint in contact with the emery cloth.

FIGURE 6 is an exploded view of FIGURE 1 with the parts disassembled but in assembled relationship.

In the drawings, like numerals refer to similar parts throughout the various views.

The typical outside shell of the spinner comprises convex surfaces 1 and 18 on the shell 2 and on the opposite shell 3. The shells 2 and 3 are made of a synthetic translucent or transparent plastic material 25.

The typical string that is employed by the user is designated by numeral 4 and is tied to the cylindrical connecting shaft 6 within the air space 5 between the string retaining discs 14 and 15.

The shells 2 and 3 respectively have mounted within same the connecting shaft grooves 16 and 17 respectively. These grooves are designed to engage the connecting shaft 6 with a tight friction fit by virtue of the lineal grooves 21 which frictionally engage the shaft 6 within the grooves 16 and 17 respectively.

Mounted on the shaft 6 are the string retaining discs 14 and 15 which have an opening 11 therein permitting the connecting shaft 6 to pass therethrough for engagement with the said grooves 16 and 17 respectively.

Mounted on the discs 14 and 15 respectively on the surfaces which face the inside of the shells 2 and 3 respectively, is a disc of an abrasive surface such as emery cloth, which has an opening in the center which aligns with the opening 11. The flint supports 12 and 13 are in the shape of a finger and are mounted on each side of the connecting shaft 6. Supports 13 and 14 have rather large expanded openings 19 and 20. It is to be noted that the openings 19 and 20 are larger than the diameter of the connecting shaft 6. (See FIGURES 3 and 4.)

Mounted in the flint supports 12 and 13 respectively is a flint 8. There are openings 26 in each of said flint supports 12 and 13 which are flanged as at 9 in FIGURE 5, making tight frictional engagement with the flints 8.

The emery cloth may be cemented or permanently secured by welding to the surface of the string retaining discs 14 and 15.

There is a solid crossbar 22 perpendicularly mounted at the bottom of the flint support 12 as is a crossbar that is hollow perpendicularly mounted on the bottom of the support 13. The diameter of the hollow crossbar 23 is designed to have the crossbar 22 inserted within crossbar 23, and is, therefore, slightly larger than 22. The opening or hollow area in crossbar 23 is designated by the numeral 24.

As can be seen in the cross-section view of FIGURE 2, when the parts are in operational engagement, the crossbar 22–23 appear to be integral with each of the supports 19 and 20, and have an L-shaped appearance.

In the view of FIGURE 4 connecting shaft 6 is shown in cross-section engagement within groove 16 in the shell housing 2. The movable flint support or finger 12 can be seen circumscribing the shaft 6 and the fact that the opening 19 in support 12 is larger than the diameter of the shaft 6 is clearly shown by the extra space (indicated by the numeral 19).

The operation of this device is similar to the operation of all Yo-Yos or spinners. The string is wound up on the shaft 6. The user drops the Yo-Yo while holding the string firmly on his finger, and the spinner spins downwardly on the string. As the spinner descends downwardly, the string unwinds. As the string unwinds, the crossbars 22 and 23 rotate upon contact with the string around the axis of the connecting shaft 6. As the flint fingers 12 and 13 rotate around the axis of connecting shaft 6, the flints 8 contact the abrasive surface of the emery cloth 10, causing sparks to flow within the shells 2 and 3.

In the particular embodiment design, the shells 2 and 3 are translucent and may be in different colors of materials 25 such as one shell might be blue and the other red. Consequently, as the sparks appear from within, there will be blue sparks and red sparks. It is within the contemplation of this invention that various colors may be used in the various shells 2 and 3.

It is also to be noted that the dimensions of the device are so arranged that the crossbar 22 and the flints 8 are always in contact with the emery cloth surfaces 10. There is no need for any springs to bias the contact of flint and the emery cloth since the string retaining discs 14 and 15 are so mounted on the shaft 6 that the surface of the emery cloth 10 is always snugly up against the flint 8.

The L-shaped member comprising support 12, opening 19, flint 8, and crossbar 22 which is connected by 22 being inserted in crossbar 23 to the L-shaped member comprising support 13, opening 20, flint 8 and crossbar 23 is always seeking to fall downwardly on the axis of connecting shaft 6. When the string 4 contacts crossbars 22–23, the connected L-shaped members will pull in the direction of the string and let go, seeking to follow the forces of gravity downwards and oscillating back and forth on the axis of rotation of 6. The flints 8 will be moved back and forth over the abrasive surface of the emery cloth 10, causing sparks.

The structure of the flint support or vertical arms 12 and 13, and crossbars 22–23, are but one embodiment of this invention. They could be replaced by a unitary U-shaped member instead of the two L-shaped members, or by an equivalent L-shaped member with a vertical member connected by a latch to the crossbar 22. The advantage of the within embodiment is for the ease in assembly and disassembly in order to replace the flints and emery cloth when they are worn.

Dimensions in the drawings have been exaggerated for the purpose of making a more complete disclosure. Changes in shape 18 of the shells or casings 1 and 3 are also within the spirit and scope of this invention.

We claim:

1. A sparking spinner comprising two symmetrical casings having transparency and having their inner surfaces facing each other, a shaft, means for connecting said shaft to the central point of the inner surfaces of said casings, an operating cord secured to said shaft whereby said shaft is the central axis upon which said casings rotate under control of said cord, said cord adapted to be wound or unwound in a clockwise or counterclockwise direction during the operation of the spinner, rotatable means on said shaft for supporting a sparking device, within each of said casings, a pair of string retaining separated discs mounted on said shaft, an abrasive surface mounted on said discs facing said sparking device within said casings in contact with said sparking device whereby when said casings rotate on the central axis of said shaft, the sparking mechanism rotates on said abrasive surface causing sparks to appear through the transparency of said casings.

2. A sparking spinner as described in claim 1 wherein said rotatable means comprises two movable arms extending outwardly in one direction from said shaft to a point within the outer periphery of said casing, a rod connected to each of said arms near the said periphery so as to form a substantial U-shaped member with said arms, said cord controlling the motion of said arms as the cord winds and unwinds on the shaft and contacts said rod.

3. A sparking spinner described in claim 1 wherein said sparking device comprises a flint which is mounted substantially perpendicular to said rotatable means and to said abrasive surface.

4. A sparking spinner as described in claim 2 wherein said sparking device comprises a flint which is mounted substantially perpendicular to said rotatable means and to said abrasive surface.

5. A sparking spinner comprising two symmetrical circular shaped shells having convex surfaces facing outwardly from each other, a connecting shaft having two ends, means within each of said shell casings for securing each shell to one end of said connecting shaft, a string fastened to said connecting shaft, adapted to be wound around said connecting shaft, two separate retaining discs, each of said discs being mounted on said shaft on each side of said string, abrasive means mounted on said discs on the surfaces opposite from said string, two L-shaped members connected together so as to form a single U-shaped member having vertical arms movably mounted on said connecting shaft with the vertical portions thereof being located between the disc and the inside surface of each shell, whereby when said string is moving and the shells are spinning, the horizontal portion of said U-shaped member will rotate back and forth on the axis of the connecting shaft under the forces of said string, and a means mounted on each of said vertical arms of said U-shaped member for contacting said a means on said discs so as to cause sparks.

6. A sparking spinner as described in claim 5 wherein a flint is mounted substantially perpendicular to said vertical arms in said U-shaped member, and wherein an abrasive surface is secured on the surface of each of said discs facing inwardly towards and in contact with the said flint, whereby sparks are made with the movement of said U-shaped member under the forces of said string aforesaid.

7. A sparking spinner comprising two symmetrical circular shaped shells having their inside surfaces facing each other, a shaft, means for connecting said shells together in the center thereof to said shaft, a string fastened to said shaft, two retaining means, each of said retaining means having an opening therein for secured engagement to said shaft on each side of said string, vertical means mounted on said shaft adapted to be rotatably movable about the axis of said shaft, a horizontal rod connected to each of said vertical means at the lowest end thereof, an abrasive surface on said retaining means facing said vertical arms, and means mounted on said vertical arms in contact with said abrasive surfaces, for causing sparks when moving over said abrasive surface.

8. A sparking spinner comprising two symmetrical casings having transparency and having their inner surfaces facing each other, a shaft, means for connecting said shaft to the central point of the inner surfaces of said casings, an operating cord secured to said shaft whereby said shaft is the central axis upon which said casings rotate under control of said cord, said cord adapted to be wound or unwound in a clockwise or counterclockwise direction during the operation of the spinner, rotatable means on said shaft for supporting a sparking device, within each of said casings, an abrasive surface fixed to said shaft within said casings in contact with said sparking device whereby when said casings rotate on the central axis of said shaft, the sparking mechanism rotates on said abrasive surface casing sparks to appear through the transparency of said casings, said rotatable means comprises two movable arms extending outwardly in one direction from said shaft to a point within the outer periphery of said casing, a rod connected to each of said arms near the said periphery so as to form a substantial U-shaped member with said arms, said cord controlling the motion of said arms as the cord winds and unwinds on the shaft

and contacts said rod, said arms being substantially on one side of the axis of said shaft, and the rod and the sparking device on the said side of the axis of the shaft so as to create a mass that produces forces that maintain said movable arms in a position below the said axis of the shaft.

9. A sparking spinner comprising two symmetrical circular shaped shells having convex surfaces facing outwardly from each other, a connecting shaft having two ends, means within each of said shell casings for securing each shell to one end of said connecting shaft, a string fastened to said connecting shaft, adapted to be wound around said connecting shaft, two separate retaining discs, each of said discs being mounted on said shaft on each side of said string, two L-shaped members connected together so as to form a single U-shaped member having vertical arms movably mounted on said connecting shaft with the vertical portions thereof being located between the disc and the inside surface of each shell, whereby when said string is moving and the shells are spinning, the horizontal portion of said U-shaped member will rotate back and forth on the axis of the connecting shaft under the forces of said string, and a means mounted on each of said vertical arms of said U-shaped member for contacting a means on said discs so as to cause sparks, a flint being mounted substantially perpendicular to said vertical arms in said U-shaped member, an abrasive surface being secured on the surface of each of said discs facing inwardly towards and in contact with the said flint, whereby sparks are made with the movement of said U-shaped member under the forces of said string aforesaid, said vertical arms being substantially on one side of the axis of the connecting shaft and the horizontal portion of said L-shaped members and flint being mounted on said side

of the shaft so as to create a mass that produces forces that maintain said vertical arms in a position below the said axis of the said shaft.

10. A sparking spinner comprising two symmetrical circular shaped shells having their inside surfaces facing each other, a shaft, means for connecting said shells together in the center thereof to said shaft, a string fastened to said shaft, two retaining means, each of said retaining means having an opening therein for secured engagement to said shaft on each side of said string, vertical means mounted on said shaft adapted to be rotatably movable about the axis of said shaft, a horizontal rod connected to each of said vertical means at the lowest end thereof, an abrasive surface on said retaining means facing said vertical arms, and means mounted on said vertical arms in contact with said abrasive surfaces, for causing sparks when moving over said abrasive surface, said vertical means being substantially on one side of the axis of shaft, and the horizontal rod and sparking means being mounted on said side so as to create a mass that produces forces that maintain said vertical arms in a position below the said axis of the shaft.

References Cited

UNITED STATES PATENTS

2,517,849	8/1950	De Vincent et al.	46—48
3,162,979	12/1964	Garoogian	46—61

OTHER REFERENCES

Popular Mechanics Monthly, October 1964, page 172.

LOUIS G. MANCENE, *Primary Examiner.*

R. F. CUTTING, *Assistant Examiner.*