63070/86

FORM 1 604649

REGULATION 9

COMMONWEALTH OF AUSTRALIA

PATENTS ACT 1952

APPLICATION FOR A STANDARD PATENT

We, SOCIETE DES PRODUITS NESTLE S.A., a Swiss body corporate of Vevey, Switzerland, hereby apply for the grant of a Standard Patent for an invention entitled:-

"PROCESS AND APPARATUS FOR REGULATING THE DEGREE OF ROASTING, ESPECIALLY OF COFFEE"

which is described in the accompanying Complete Specification.

Details of basic application:-

Number: 4527/85-1

Country: SWITZERLAND

Date: 21st October, 1985

APPLICATION ACCEPTED AND AMENDMENTS ALLOWED 19-9-90

Our address for service is: SHELSTON WATERS
55 Clarence Street
SYDNEY, N.S.W. 2000.

DATED this 23rd day of September, 1986

SOCIETE DES PRODUITS NESTLE S.A.

by Robert J. Shelston

Fellow Institute of Patent Attorneys of Australia
of SHELSTON WATERS

To: The Commissioner of Patents
WODEN A.C.T. 2606

File: D.B.T.199A

Fee: $130.00

MM

PATENT OFFICE
A.C.T. 199A
086855
Collector of Public Moneys

LODGED AT SUB-OFFICE
23 SEP 1986
Sydney

O.Z. 1819/02

(CONVENTION – Company) FORM 8 – REGULATION 12 (2)

COMMONWEALTH OF AUSTRALIA PATENTS ACT, 1952-1973

DECLARATION IN SUPPORT OF A CONVENTION APPLICATION FOR A PATENT

In support of the Convention Application No. ..... made

(a) Here insert (In full) Name of Company.

by [a] Société des Produits Nestlé S.A.

(hereinafter referred to as "Applicant") for a patent for an invention entitled:

(b) Here insert Title of Invention.

[b] "Process and apparatus for regulating the degree of roasting, especially of coffee"

I, [c] Andrzej W. Ledzion

(c) and (d) Here insert Full Name and Address of Company Official authorised to make declaration.

of [d] En la Priauraz, 1807 Blonay, Switzerland

do solemnly and sincerely declare as follows:

1. I am authorised by Applicant to make this declaration on its behalf.

2. The basic Application(s) as defined by section 141 of the Act was/were made

(e) Here insert Basic Country or Countries followed by date or dates of Basic Application(s).

in [e] Switzerland on the 21st day of October 1985

.....on the .....day of .....19...

(f) Here insert Full Name(s) of Applicant(s) in Basic Country.

by [f] Société des Produits Nestlé S.A.

(g) Here insert (In full) Name and Address of actual Inventor or Inventors.

3. [g] Toai LE VIET, of Sentier de Clies, 1800 Vevey, Switzerland and Bernard TRUCHEMENT, of 4, Route de Sichoz, of 1814 La Tour-de-Peilz, Switzerland

.....is/are

the actual Inventor(s) of the invention and the facts upon which Applicant is entitled to make the Application are as follows:

Applicant is the Assignee of the said Inventor(s).

4. The basic Application(s) referred to in paragraph 2 of this Declaration was/were the first Application(s) made in a Convention country in respect of the invention, the subject of the Application.

DECLARED at Vevey, Switzerland

this .....day of .....19...

(h) Personal Signature of Declarant (c) (no seal, witness or legalisation).

16 SEP 1986

[h] .....

(Signature of Declarant)

To THE COMMISSIONER OF PATENTS.

SHELSTON WATERS
PATENT ATTORNEYS
55 CLARENCE STREET, SYDNEY
AUSTRALIA
Cables: 'Valid' Sydney Telex: 24422

(12) PATENT ABRIDGMENT (11) Document No. AU-B-63070/86
(19) AUSTRALIAN PATENT OFFICE (10) Acceptance No. 604649

(54) Title
COFFEE ROASTING

International Patent Classification(s)
(51)[4] A23L 001/025 A23F 005/04 A23G 001/02 A23L 001/01
A23L 001/36 A23N 012/08

(21) Application No. : 63070/86 (22) Application Date : 23.09.86

(30) Priority Data

(31) Number	(32) Date	(33) Country
4527/85	21.10.85	CH SWITZERLAND

(43) Publication Date : 30.04.87

(44) Publication Date of Accepted Application : 03.01.91

(71) Applicant(s)
SOCIETE DES PRODUITS NESTLE S.A.

(72) Inventor(s)
TOAI LE VIET; BERNARD TRUCHEMENT

(74) Attorney or Agent
SHELSTON WATERS, 55 Clarence Street, SYDNEY NSW 2000

(56) Prior Art Documents
US 4326114

(57) Claim

1. A process for roasting materials comprising transporting material to be roasted through a microwave roaster for roasting to a system which communicates with the roaster and which is free from any energy source for receiving roasted material from the roaster, retaining the material in the system for a time for completing roasting and for varying and regulating the final degree of roasting of the material and feeding the roasted material from the system to a quenching zone which communicates with the system for quenching the roasted material.

6. A roasting apparatus for carrying out the process claimed in any one of claims 1 to 5 comprising:

a horizontal rotatable cylindrical tube housed in a microwave applicator, the tube having an inlet for

.../2

accepting material to be roasted, baffles for transporting the material to be roasted through the tube for roasting and an outlet for discharging material which has been transported to the outlet and which has reached a roasting temperature;

a system free from any energy source which communicates with the outlet of the tube for receiving roasted material from the tube for retaining the roasted material for a time for completing roasting and varying and regulating the final degree of roasting of the material; and

a zone which communicates with the system for receiving roasted material from the system for quenching the roasted material.

604649

COMMONWEALTH OF AUSTRALIA

FORM 10

PATENTS ACT 1952

COMPLETE SPECIFICATION

FOR OFFICE USE:

Class Int.Class

Application Number: 63070/86.
Lodged:

Complete Specification Lodged:
Accepted:
Published:

Priority:

Related Art:

This document contains the amendments made under Section 49 and is correct for printing.

Name of Applicant: SOCIETE DES PRODUITS NESTLE S.A.

Address of Applicant: VEVEY, SWITZERLAND

Actual Inventor: TOAI LE VIET AND BERNARD TRUCHEMENT

Address for Service: SHELSTON WATERS, 55 Clarence Street, Sydney

Complete Specification for the Invention entitled:

"PROCESS AND APPARATUS FOR REGULATING THE DEGREE OF ROASTING, ESPECIALLY OF COFFEE"

The following statement is a full description of this invention, including the best method of performing it known to me/us:-

"Process and apparatus for regulating the degree of roasting, especially of coffee"

This invention relates to a process for regulating the degree of roasting, particularly of coffee, in which the coffee is subjected to rapid microwave roasting and to quenching with water and air. This invention also relates to an apparatus for carrying out this process.

The microwave roasting of coffee is known. US-PS 4 326 114 relates to a microwave roasting apparatus comprising an inclined tube which is charged with the coffee grains, microwave sources distributed along the tube, a chamber with a last microwave source for controlling and completing roasting and a cooling chamber equipped with nozzles. In this apparatus, the degree of roasting of the coffee grains is increased by increasing the energy of the last microwave source. Another possible solution would be to reduce the feed rate of the coffee grains. The first solution involves an increase in an energy consumption while the second involves a reduction in productivity.

It is an object of the present invention, at least in its preferred embodiment, to provide a roasting process for regulating the degree of roasting of coffee grains within wide limits without modifying the feed

AUSTRALIAN PATENT OFFICE MYS

rate of the coffee grains and without modifying the energy of the microwave source used for roasting. This process may also be used for roasting cocoa beans and also for roasting almonds, hazelnuts, peanuts and the like.

The present invention provides a process for roasting materials, such as coffee grains, comprising transporting the material to be roasted through a microwave roaster for roasting to a system which communicates with the roaster and which is free from any energy source for receiving roasted material from the roaster, retaining the material in the system for a time for completing roasting and for varying and regulating the final degree of roasting of the material and feeding the roasted material from the system to a quenching zone which communicates with the system for quenching the roasted material.

The invention thus provides a process in which the coffee grains are roasted by microwaves and the final degree of roasting may be rapidly varied by retaining the coffee grains for a more or less long period before the final quenching, thus utilizing the energy remaining in the coffee grains to complete roasting. With microwaves, this residual energy is uniformly distributed throughout the volume of the coffee grain, thus avoiding the drawback of conventional rapid

AUSTRALIAN PATENT OFFICE MTB

roasting, namely roasting of the coffee grain from its outer shell.

This system enables the balance of the end product to be varied very easily, depending on whether it is desired to approach the balance obtained by rapid roasting or whether it is preferred to approach the balance of conventional roasting.

In cases where the process according to the invention is carried out for coffee, the retention time is from 0.1 to 5 minutes, the roasting time from 0.2 to 3 minutes and the roasting temperature from 200 to 240°C.

Apart from coffee, the process according to the invention may also be used for roasting cocoa beans, in which case the roasting temperature will be of the order of 140°C, the retention and roasting times remaining substantially the same. Hazelnuts and almonds may also be roasted in accordance with the invention. In their case, the roasting temperature is of the order of 110°C.

The present invention also provides a roasting apparatus for carrying out the process described above comprising:

a horizontal rotatable cylindrical tube housed in a microwave applicator, the tube having an inlet for accepting material to be roasted, baffles for transporting the material to be roasted through the tube for roasting and an outlet for discharging material which has been

AUSTRALIAN PATENT OFFICE MVB

transported to the outlet and which has reached a roasting temperature;

a system free from any energy source whichcommunicates with the outlet of the tube for receiving roasted material from the tube for retaining the roasted material for a time for completing roasting and varying and regulating the final degree of roasting of the material; and

a zone which communicates with the system for receiving roasted material from the system for quenching the roasted material.

The apparatus operates substantially as follows:

The coffee grains are brought from a feed hopper into the horizontal cylindrical tube mounted for rotation about its axis. The coffee grains are transported under the effect of this rotation and are progressively brought to the roasting temperature, namely of the order of 200 to 240°C. The microwave applicator comprises at least one microwave source and preferable from 2 to 4 microwave sources. When they reach the end of the roasting cylinder, the coffee grains fall into the retention hopper comprising a feed regulating system in the form of a motor driving a helical screw. This regulating system is connected to a means for regulating and controlling the retention time in the form of a temperature sensor and a level sensor, these sensors being located a different levels in the retention

AUSTRALIAN PATENT OFFICE MTB

hopper. In a modified embodiment, the means for regulating and controlling the retention time is in the form of a metering balance supporting the retention hopper. In this case, the weight of coffee to be retained in the retention hopper is displayed on the balance so that the feed regulation system transports the coffee grains while keeping constant the weight of coffee retained in the above-mentioned hopper.

Finally, on leaving the retention system, the coffee grains undergo quenching and are transported to the packing stations. According to the invention, the retention time of the coffee grains is selected according to the desired final degree of roasting: the longer the retention time, the higher the degree of roasting.

A preferred embodiment of the invention will be described, by way of example only, with reference to the accompanying drawings in which:

Figure 1 is a perspective view of the apparatus

AUSTRALIAN PATENT OFFICE

according to the invention.

Figure 2 is a cross-section through the retention hopper.

The apparatus is mounted on a frame (1) and comprises a feed hopper (2), a microwave applicator (3), a retention system (4) and a quenching system (5).

The feed hopper (2) comprises a motor (6) and an endless screw (not shown) for transporting the coffee grains. The grains thus arrive in the horizontal roasting tube (8) through the inlet (7). In figure 1, the coffee grains are represented by a thick black line. The roasting tube (8) is rotated in the direction of the arrow A by a motor (9) provided with a chain system (10) driving rollers (11), said rollers bearing against the roasting tube (8) and causing it to rotate. The tube (8) comprises baffles (12) which, on the one hand, enable the coffee grains to advance while, on the other hand, regulating the path followed by the grains and hence the roasting time. Four microwave sources (13) are arranged over the tube (8).

The retention system (4) comprises the channelling funnel (14) and also the actual retention hopper (15). As shown in Figure 2, the retention hopper comprises a roasting temperature sensor S_1, a level sensor S_2 and a safety sensor S_3. The motor (16) transports the coffee grains via the helical screw (17) to the quenching system (5) which comprises a water inlet (18) and nozzles (19). The coffee grains thus cooled pass from the conveyor belt (20) to the packing station.

The foregoing description enables the operation of the apparatus according to the invention to be understood. However, the retention process for the coffee grains should be further explained, particularly with reference to Figure 2. The roasted coffee leaves the roasting tube (8) and falls into the retention hopper (15). The retention time is selected according to the desired final

degree of roasting. Knowing the output of the metering system (15,16,17), this retention time enables the retention volume to be determined. As it is displaceable in the direction of the arrow C, the level sensor S_2 is positioned accordingly. Because the motor (16) is connected to S_1, S_2 and S_3, it drives the helical screw (17) so that the temperature indicated by S_2 is the temperature indicated by S_1, i.e. the coffee grains cover S_2. If S_2 indicates a temperature below S_1, the motor reduces its speed whereas, if the safety sensor S_3 increases in temperature, the motor (16) increases its speed so that the level of coffee grains falls. Accordingly, this is a very reliable and very flexible means for regulating the degree of roasting of the coffee.

The second possibility of regulating the degree of roasting is to have a metering balance supporting the retention hopper. This metering balance enables the exact quantity of coffee retained in the hopper at any time to be known. Knowing the quantity and feed rate, it is possible to deduce the retention time. This solution enables the degree of roasting to be regulated even more precisely.

COMPARISON EXAMPLE AND EXAMPLE

The advantages of the process according to the invention are clearly illustrated in the following by an Example without retention and an Example with a retention time of 25 seconds for otherwise the same conditions.

Colombian coffee with an initial moisture content of 10% was used. A feed rate of 80 kg/hour, a roasting time of 100 seconds, a hopper entry temperature of 220°C, a rotational speed of the roasting tube of 2.5 r.p.m. and four 5 KW microwave sources were used for the Example and Comparison Example.

The results obtained are shown in Table I below.

TABLE I

	Comparison Example	Example with 25 seconds' retention
Moisture (%)	2.41	1.62
Aroma index	1076	1236
Equilibrium factor	1.56	2.69
Material extractable with water (%)	29.4	31
G.N. of the whole grains	6.04-5.95	3.96-3.98
G.N. ground coffee	5.2	3.1

The G.N. was determined using the roastometer according to EP-PS 106 135. To define this G.N., it should be pointed out that three values are necessary and sufficient for defining the colour. In the so-called "Munsell" system, they are the values for tint (X), brilliance (Y) and saturation (Z). The G.N. corresponds to the value Y obtained through a green filter. It varies from 0 (abolute black) to 100 (pure white). As a general rule, roasted coffees show Y-values (or G.N.) of from 2 to 6. A value of 2 indicates a highly roasted coffee while a value of 6 indicates a very light coffee.

To obtain a G.N. equal to that obtained with a retention time, the coffee has to be roasted for 115 seconds instead of the 100 seconds with a retention time.

The aroma index is defined as the arithmetic mean of

the absorption at 212 and 273 nm of a distillate of volatile substances present in the sample stripped with steam and condensed water. The aroma index increases with the aroma content.

The equilibrium factor is defined as the ratio of the absorption at 212 nm to the absorption at 273 nm. This factor provides information on the degree of roasting applied to the coffee, increasing when the coffee becomes darker in colour.

Although the invention has been described with reference to specific examples, it will be appreciated by those skilled in the art that the invention may be embodied in many other forms.

AUSTRALIAN PATENT OFFICE MJS

THE CLAIMS DEFINING THE INVENTION ARE AS FOLLOWS:-

1. A process for roasting materials comprising transporting material to be roasted through a microwave roaster for roasting to a system which communicates with the roaster and which is free from any energy source for receiving roasted material from the roaster, retaining the material in the system for a time for completing roasting and for varying and regulating the final degree of roasting of the material and feeding the roasted material from the system to a quenching zone which communicates with the system for quenching the roasted material.

2. A process as claimed in claim 1 wherein the microwave roaster is comprised of a horizontal rotatable cylindrical tube having baffles for transporting the material through the roaster for roasting and wherein the retention time of the material in the system is from 0.1 to 5 minutes.

3. A process as claimed in claim 1 or 2 wherein the time of the microwave roasting is from 0.2 to 3 minutes.

4. A process as claimed in claim 3 wherein the microwave roasting temperature is from 200°C to 240°C.

5. A process as claimed in claim 1 wherein the materials are selected from the group consisting of coffee, cocoa, almonds, hazelnuts and peanuts.

AUSTRALIAN PATENT OFFICE MTS

6. A roasting apparatus for carrying out the process claimed in any one of claims 1 to 5 comprising:

a horizontal rotatable cylindrical tube housed in a microwave applicator, the tube having an inlet for accepting material to be roasted, baffles for transporting the material to be roasted through the tube for roasting and an outlet for discharging material which has been transported to the outlet and which has reached a roasting temperature;

a system free from any energy source which communicates with the outlet of the tube for receiving roasted material from the tube for retaining the roasted material for a time for completing roasting and varying and regulating the final degree of roasting of the material; and

a zone which communicates with the system for receiving roasted material from the system for quenching the roasted material.

7. A roasting apparatus according to claim 6 wherein the system comprises a hopper and a motor driven helical screw and sensors in the hopper for varying and regulating feed rate of the roasted material to the quenching zone for varying and regulating retention time of roasted material in the system.

8. A roasting apparatus according to claim 7 wherein the

AUSTRALIAN PATENT OFFICE

sensors comprise a temperature sensor and a level sensor.

9. A roasting apparatus according to claim 8 wherein the system further comprises a safety sensor in the hopper.

10. A roasting apparatus according to claim 6 wherein the system comprises a metering balance supporting a hopper with a motor driven helical screw in the hopper for varying and regulating retention time of roasted material in the system.

11. A roasting apparatus according to claim 6 or 7 or 10 wherein the microwave applicator has at least one microwave source.

12. The roasting apparatus of claim 11 wherein the microwave applicator has from two to four microwave sources.

13. The roasting apparatus of claim 6 wherein the materials are selected from the group consisting of coffee, cocoa, almonds, hazelnuts and peanuts.

14. A roasting apparatus substantially as hereinbefore described with reference to the accompanying drawings.

15. A process for roasting materials substantially as hereindescribed with reference to the EXAMPLE (excluding the comparison Example).

DATED THIS 4th day of SEPTEMBER 1990

SOCIETE DES PRODUITS NESTLE SA

Attorney: WILLIAM S. LLOYD

Fellow Institute of Patent Attorneys of Australia

of SHELSTON WATERS

AUSTRALIAN PATENT OFFICE MTS

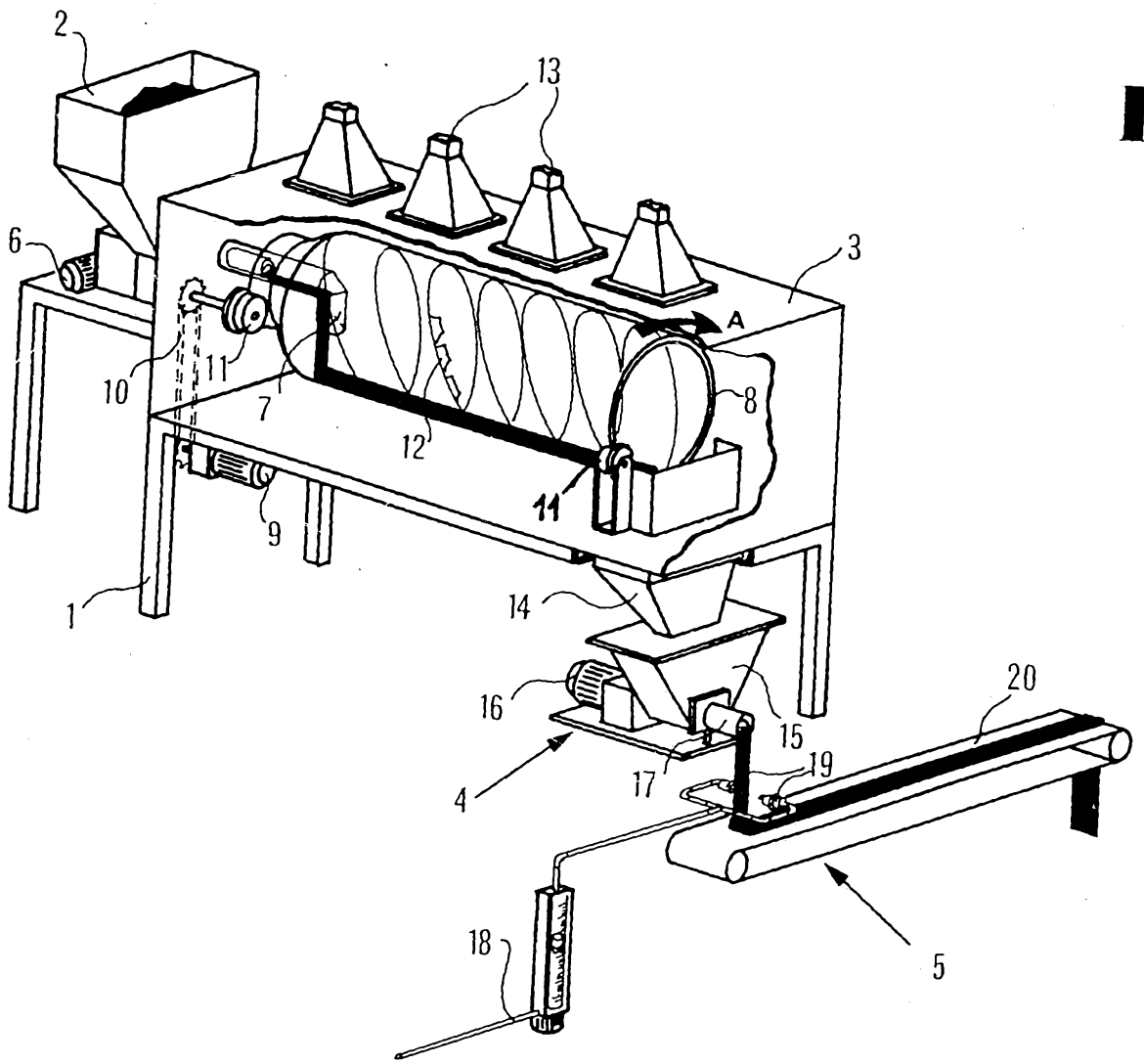

Fig. 1

63 070/86

Fig. 2

63 070/86

