Aug. 23, 1932. E. B. SOMERS 1,873,063

SPRING TENSION DEVICE FOR RIBBONERS

Filed May 3, 1930 3 Sheets-Sheet 1

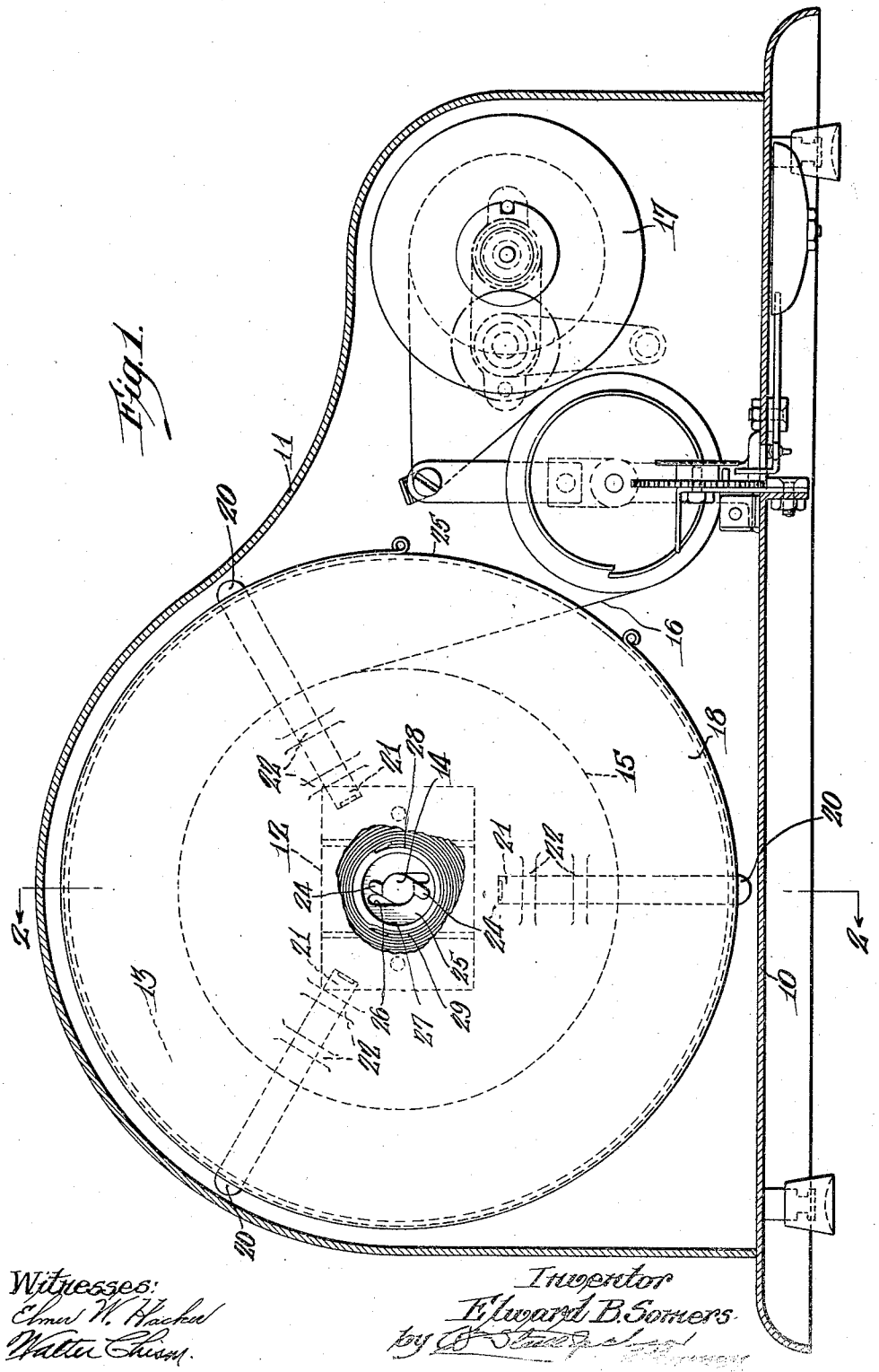

Witnesses:
Elmer W. Hacker
Walter Chism.

Inventor
Edward B. Somers
by [illegible]

Aug. 23, 1932. E. B. SOMERS 1,373,063

SPRING TENSION DEVICE FOR RIBBONERS

Filed May 3, 1930 3 Sheets-Sheet 2

Fig. 2.

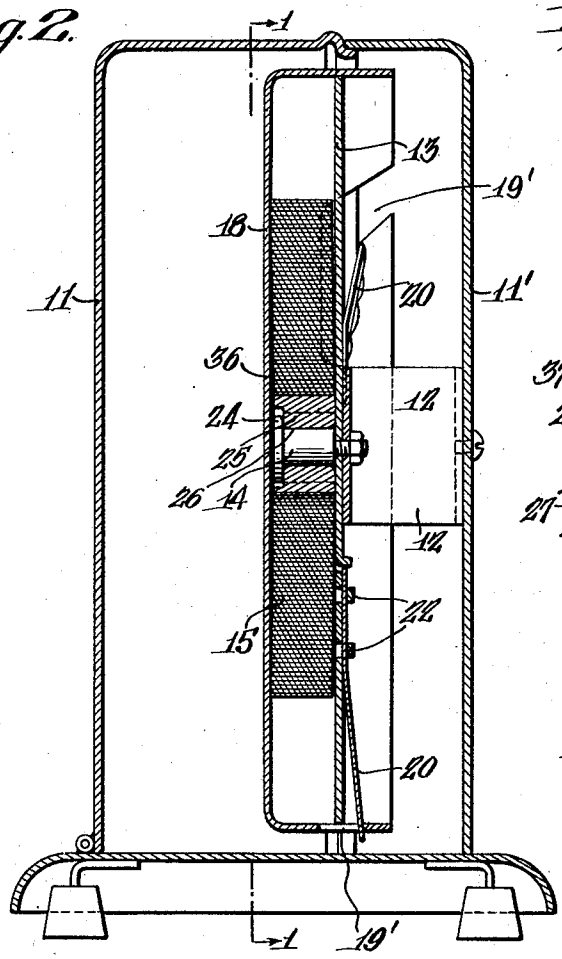

Fig. 3.

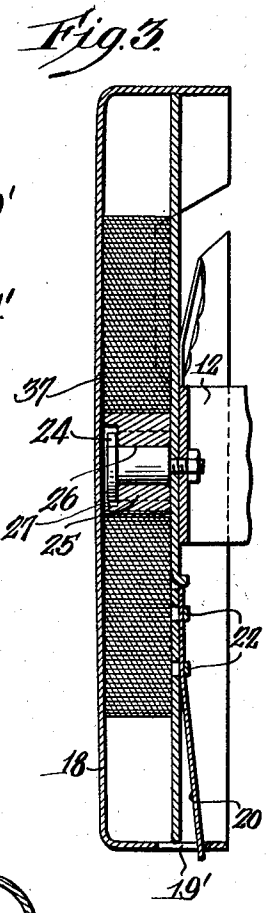

Fig. 4.

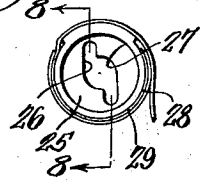

Fig. 5.

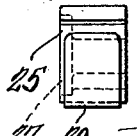

Fig. 6.



Fig. 7.

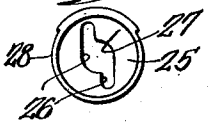

Fig. 8.

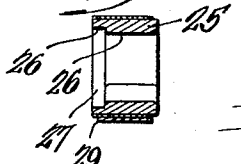

Witnesses:
Elmer W. Hacker
Walter Chism

Inventor:
Edward B. Somers.

by W. F. Steele Jr.
Attorney

Aug. 23, 1932. E. B. SOMERS 1,873,063

SPRING TENSION DEVICE FOR RIBBONERS

Filed May 3, 1930 3 Sheets-Sheet 3

Fig. 9.

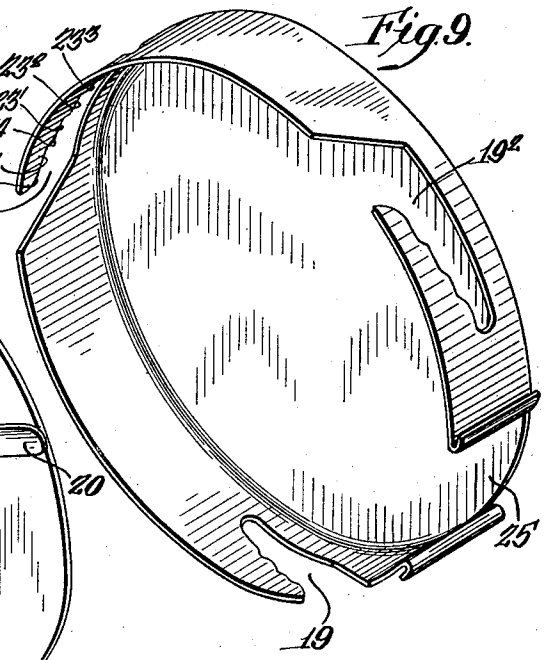

Fig. 10.

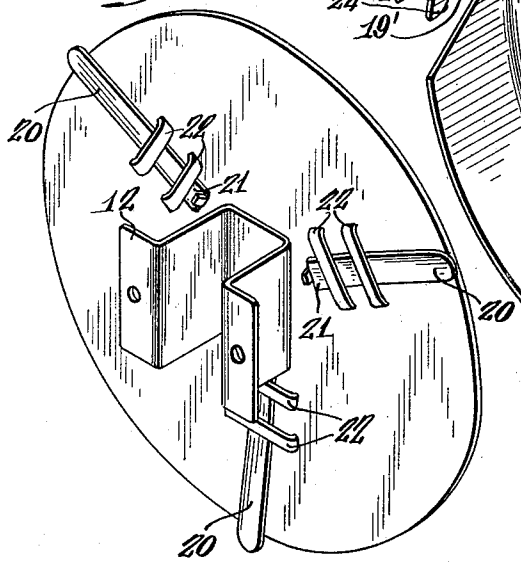

Fig. 12.

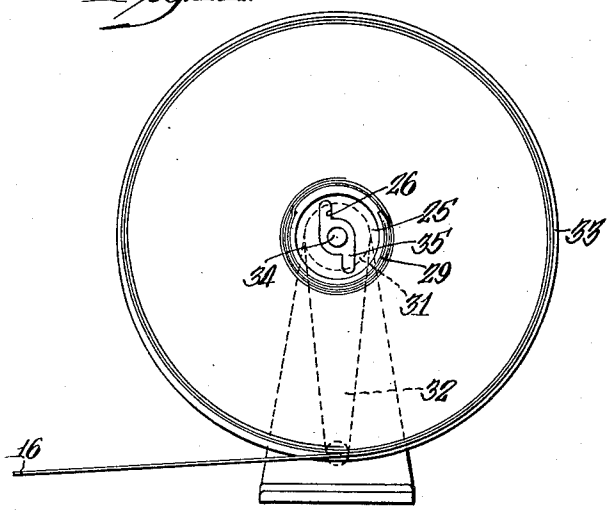

Fig. 11.

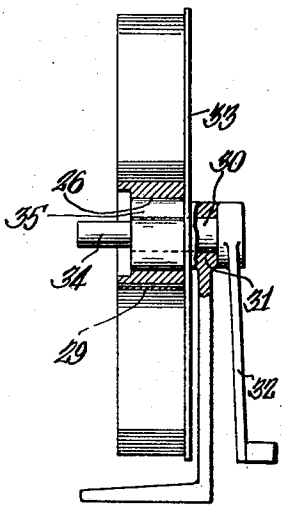

Witnesses:
Elmer W. Hacker
Walter Chism

Inventor:
Edward B. Somers
by Wm Steele Jackson
Attorney

Patented Aug. 23, 1932 1,873,063

UNITED STATES PATENT OFFICE

ELWARD B. SOMERS, OF DARBY, PENNSYLVANIA

SPRING TENSION DEVICE FOR RIBBONERS

Application filed May 3, 1930. Serial No. 449,428.

My invention relates to reeling mechanism for winding typewriter ribbons from ribbon supply rolls on to the ribbon spools of typewriters and to the said larger rolls, the case being a continuation in part of my copending application, Ser. No. 264,019, now Patent No. 1,757,147 entitled "Ribboner".

One purpose of my invention is to secure resilient frictional retardation for a supply roll of mechanism of the character indicated with an adaptation to adjust the mechanism to operate upon different widths of ribbon.

A further purpose is to provide a desirable form of pivot and spool mount for a supply roll for mechanism of the character indicated, the pivot mounted on the machine being adapted to receive interchangeably spools of different supply rolls and having characteristics adapting it to easy winding and rewinding.

A further purpose is to provide the spool of a ribbon supply roll with a desirable form of spring clamp connection with the inner end of the ribbon of the roll.

A further purpose is to provide a spool for a supply roll of the character indicated with a circular recess inwardly from one end and a longitudinal axial keyway beyond the recess.

Further purposes will appear in the specification and in the claims.

I have elected to illustrate my invention in one only of its different forms showing however a form that is practical and efficient in operation and which well illustrates the principles involved.

Figure 1 is a longitudinal section corresponding to the line 1—1 of Figure 2 illustrating mechanism in general accord with that disclosed in my above application and provided with features embodying my present invention.

Figure 2 is a section of Figure 1 taken upon the line 2—2 thereof.

Figure 3 is a fragment of Figure 2.

Figure 4 is an end elevation of a detail.

Figure 5 is a side view of the structure shown in Figure 4 but without a ribbon shown in Figure 4.

Figures 6 and 7 are end views of details corresponding to separate portions of Figure 4.

Figure 8 is a section taken upon the line 8—8 of Figure 4.

Figures 9 and 10 are perspective views respectively of front and rear details of the roll casing.

Figures 11 and 12 are side and rear elevations, in part section, of a winder.

In the drawings similar numerals indicate like parts.

My winding mechanism is conveniently mounted upon any suitable frame which is here shown as comprising a base plate 10, hollow to hold part of the mechanism, and a top or cover 11, 11′ made in two parts for convenience of access.

The reeling mechanism is most conveniently attached to a rigidly supported part of the case, with measuring mechanism most conveniently supported from the base, but these relations are not essential.

As shown I attach the ribbon roll support to the member 11 by a bracket 12. The support itself is in the form of a preferably stationary backing or braking member 13 and a projecting key pivot 14 about which the roll 15 is adapted to turn as the ribbon 16 of the roll is drawn from it by rotation of the spool 17.

The ribbon roll 15 will of course be of different widths according to the width of the ribbon used upon the typewriter which it is intended to fit, but all of these widths may be accommodated in the mechanism shown.

In order to apply pressure to the sides of the roll so as to give the desired friction against unwinding I loosely spring clamp the roll between the surface of the braking member 13 and the surface of a second braking member, cover 18. The cover protects additionally against soiling of the ribbon at the same time that it performs the clamping or braking function.

It is quite desirable that the braking be resilient and that it be adaptable to ribbons of different widths. These aims are secured by radially perforating the inwardly turned circumferential portion of the cover 18 at several points about its circumference as at

19, 19′, 19² in such a way that it may engage fingers 20 at different distances in an axial direction from the transverse circular body of the cover according to the angular position of the cover with respect to the fingers.

The fingers 20 are resilient in a direction transverse to the braking surfaces and are located at the free ends of springs 21 whose inner ends are rigidly fastened to the plate by any suitable means such as by strips 22.

The springs 21 diverge from the plate at their outer ends to give the required resilience between the fingers and any suitable recess faces 23 on the cover.

To provide for variation of the "set" distance between the two braking surfaces I therefore utilize a series of stepped faces 23, 23′, 23² and 23³ for engagement with the ends of the spring fingers 20 so that the pressure of engagement is varied by the extent to which the cover 18 is turned after engagement with the fingers begins.

The introduction to the first face 23 and the recess surfaces between successive faces are sloped as at 24 so as to make it possible conveniently to apply the cover against the spring in any of the adjusted positions by merely passing the cover openings 19, 19′ and 19² over the spring fingers and then rotating the spring in a direction which would be clockwise as shown in Figure 1 and counterclockwise as shown in Figure 9.

In addition to the openings leading to the stepped surfaces 23, 23′, etc. the cover is cut at 25 throughout a space large enough to provide for outward passage of the ribbon 16 from the roll in any of the positions to which the cover has been turned.

As the ribbon passes out from the supporting mechanism it passes about a drum 26, supported to rotate upon or about a stub shaft 27. It then passes between a curved guide 28 and a guard 28¹ and thence into engagement with the spool 17 upon which it is being wound. The drum is interposed for the purpose of providing a measure and indicator or alarm so as to permit preliminary setting of the length of ribbon which is being wound from the roll and upon the ribbon spool.

One important feature of my invention is directed to the pivot and spool mount for the large supply roll 15. The pivot pin member 14 comprises an eared pin that is centrally fastened to the stationary friction plate 13 projecting horizontally toward the recessed cooperating friction plate 18.

I show the pin 14 having a threaded shank through the plate 13 and bracket 12, a nut holding the pivot to place.

I provide the pivot 14 with ears 29 at the outer end and prefer to have these ears at an angle to the radius of the spool member 30 which is provided with an axial keyway 31 to pass the ears and with a central circular recess 32 inwardly from its outer end to permit rotation of the spool with respect to the pivot, with the ears in the recess and the end of the pivot not extending beyond the outside of the spool.

The spool has a length preferably great enough to enclose the pivot 14 for its full extension from the plate 13, a length desirably equal to but not greater than the width of the most narrow commercial ribbon with which the winder is likely to be used.

I provide the different widths of commercial ribbon with different spools making the lengths of the spools variant to correspond with the variant widths of ribbon. I prefer to maintain the axial keyway 31 of the same dimension for all spools, with variant depths however to the circular recess 32, thereby adapting all the spools to interchangeably pivot on the member 14.

During unwinding the opposite sides of the supply roll are resiliently pressed between the plates 13 and 18 to effect a resilient braking of the roll.

This resilient pressure I find very advantageous in that it prevents undue movement of the spool except incident to the pull upon the ribbon when it is being wound upon the typewriter spool 17.

I inwardly recess the outside of the spool 30 at 33 to receive a curved spring 34, the recess and spring extending more than half way around the spool circumference and the spring being used to hold the inner end of the ribbon to the spool.

This spring hold between the spool and the inner end of the ribbon I find particularly convenient in that it holds the ribbon end to the spool for easy winding but lets go automatically when the last of the ribbon unwinds from the supply spool 30.

The keyway perforation through the spool permits the spool to be mounted upon a non-circular shaft for winding and subsequently permits it to be used for easy unwinding.

My winder, as illustrated in Figures 11 and 12, includes a shaft 35, having journal support at 36, carrying a winding crank handle 37 on one side of the journal, and on the other side thereof carrying a disc or flange 38, a short cylindrical portion 39, fitting inside the recess of the spool and an axial key 40 fitting the keyway 26 of the spool.

Additional features of the winder are not shown in that they form no part of the present invention.

I secure the needed braking of the supply roll by resilient pressure between the plate members 13 and 18, springs 20 carried by the plate 13 passing through the stepped openings in the outside circumferential portion of the member 18 to press the member axially inward upon the supply roll.

I find it desirable to make the engagement between the plate 18 and the supply roll take

place chiefly or wholly at or near the outside turns of the unwinding roll and may accomplish this by inwardly dishing the roll as indicated at 41, Figure 2, or by outwardly dishing the plate 18 as indicated at 42 Figure 3.

In the one case the frictional engagement is between the outside turns of the supply roll and the inwardly directed face of the plate 18 on one side and on the other side is between the inner end of the spool and the plate 13, with or without an engagement of the inner edges of the inner turns of the ribbon with the plate 13.

I find both forms satisfactory and optionally may use either.

In view of my invention and disclosure variations and modifications to meet individual whim or particular need will doubtless become evident to others skilled in the art, to obtain all or part of the benefits of my invention without copying the structure shown, and I, therefore, claim all such in so far as they fall within the reasonable spirit and scope of my invention.

Having thus described my invention, what I claim as new and desire to secure by Letters Patent is:—

1. In mechanism for rewinding ribbon from a roll, a pin about which the ribbon roll is mounted, a brake against which one side of the ribbon roll is adapted to bear, spring fingers projecting beyond the brake and a cover for the ribbon roll adapted to engage the fingers to hold the cover in friction contact with the other side of the roll.

2. In mechanism for rewinding ribbon from a roll, a pin about which the ribbon roll is mounted, a brake against which one side of the ribbon roll is adapted to bear, spring fingers projecting beyond the brake and a cover for the ribbon roll having stepped contacts engaging the fingers to lock with them in frictional engagement with rolls of different ribbon width.

3. In mechanism for rewinding ribbon from a roll, a pin about which the ribbon roll is mounted, a brake against which one side of the ribbon is adapted to bear, spring fingers projecting beyond the brake and a cover for the ribbon roll making spring engagement with the fingers successively in different angular positions and resilliently fitting and frictionally engaging rolls of different ribbon width.

4. In mechanism for rewinding ribbon from a roll, a pin about which the ribbon roll is mounted, a brake against which the ribbon is adapted to bear at one side, spring fingers projecting beyond the brake and a cover for the roll notched to engage the fingers to utilize the spring of the fingers in resilient pressure of the cover against the rolls.

5. In mechanism for rewinding ribbon from a roll, a pin about which the ribbon roll is mounted, a brake against which the ribbon is adapted to bear at one side, spring fingers projecting beyond the brake and a cover for the roll notched to engage the fingers and having stepped engaging faces to utilize the spring of the fingers to resiliently engage ribbon rolls of different ribbon thickness.

6. A pivot and spool mount for a supply roll of mechanism of the character indicated, the pivot having a stationary support on the mechanism and extending to support the spool, the extension including a generally cylindrical portion and lateral ears at the end thereof and the spool having an axial circular recess from one end inwardly and a keyway axial perforation adapted to pass the ears of the pivot into the recess from the other end of the spool, the spool being adapted to turn upon the cylindrical portion while the ears thereof are within the recess.

7. A pivot member for a spool of a ribbon supply roll including a support, a projecting pin, laterally extending ears at the projecting end of the pin, and a spool having an axial keyway adapted to pass the pin and ears and having a circular recess beyond the circular portion of the pin and of radius sufficient to clear the outside of the ears to permit rotation of the spool with respect to the pin.

ELWARD B. SOMERS.