Feb. 14, 1961 G. SMITH ET AL 2,971,617

CEILING STRUCTURE

Filed Dec. 14, 1953 3 Sheets-Sheet 1

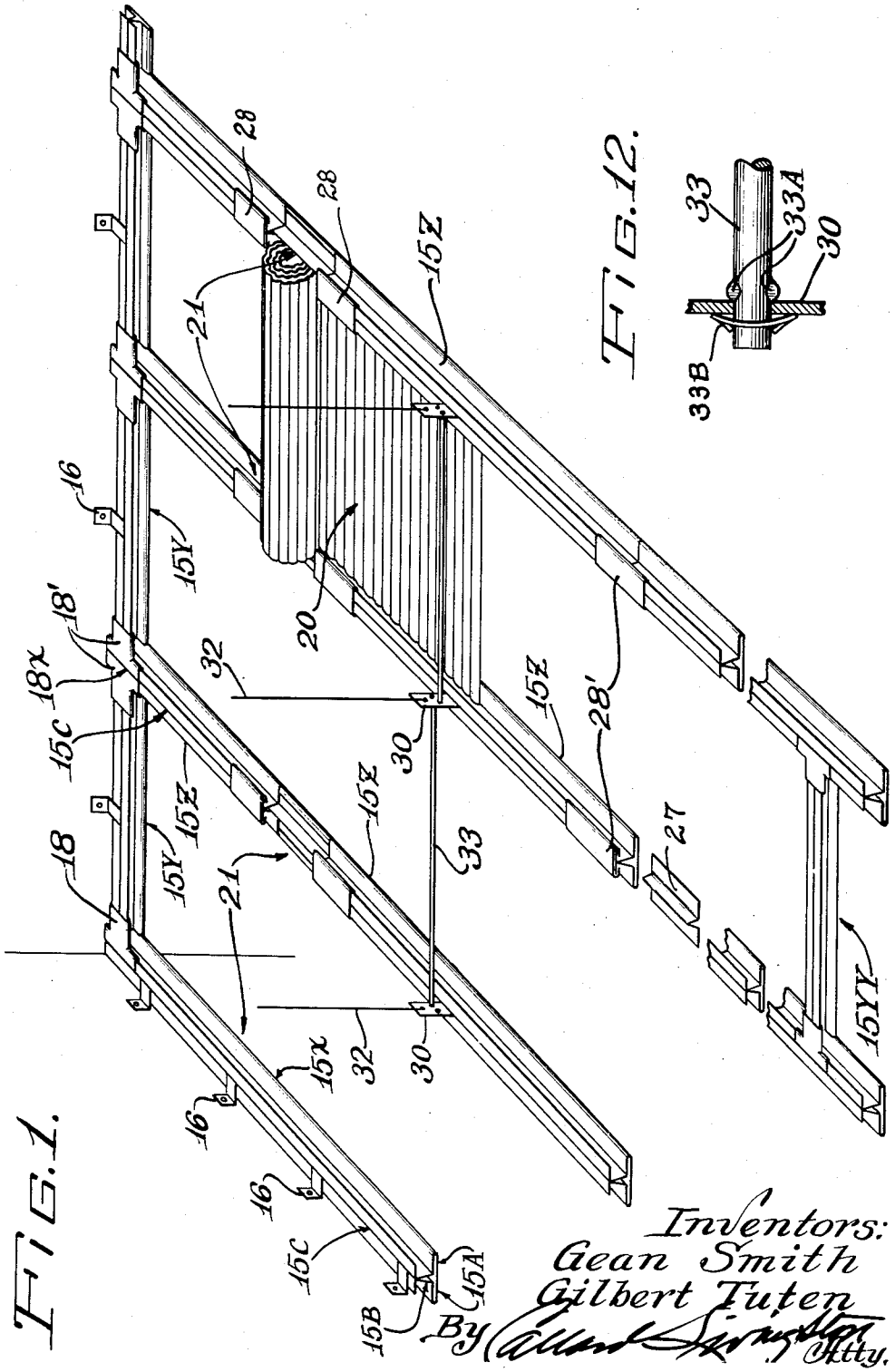

FIG. 12.

FIG. 1.

Inventors:
Gean Smith
Gilbert Tuten
By Allard Livingston Atty.

Feb. 14, 1961 G. SMITH ET AL 2,971,617

CEILING STRUCTURE

Filed Dec. 14, 1953 3 Sheets-Sheet 2

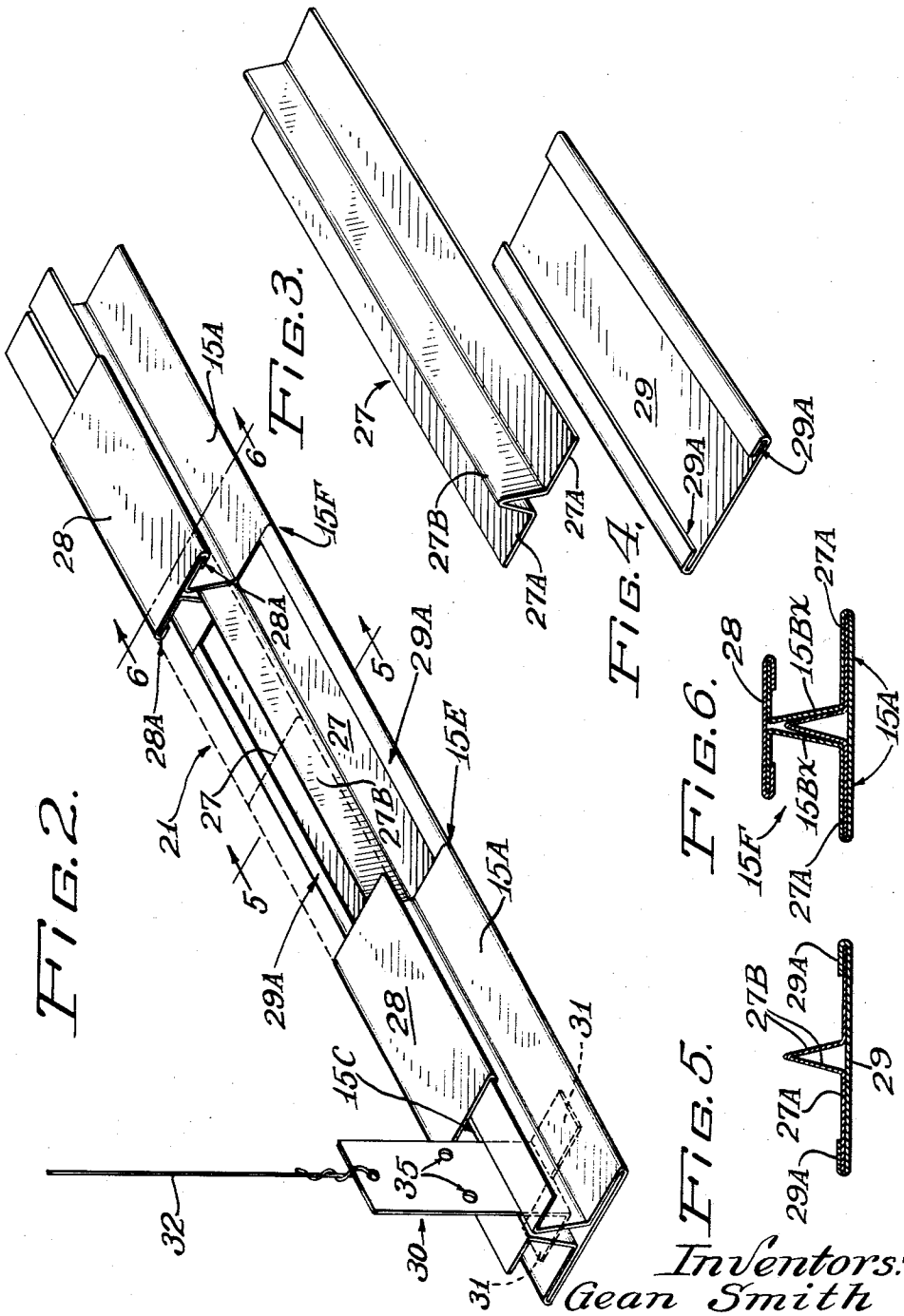

Inventors:
Gean Smith
Gilbert Tuten
By Callard Livingston Atty.

Feb. 14, 1961 G. SMITH ET AL 2,971,617

CEILING STRUCTURE

Filed Dec. 14, 1953 3 Sheets-Sheet 3

Fig. 7.

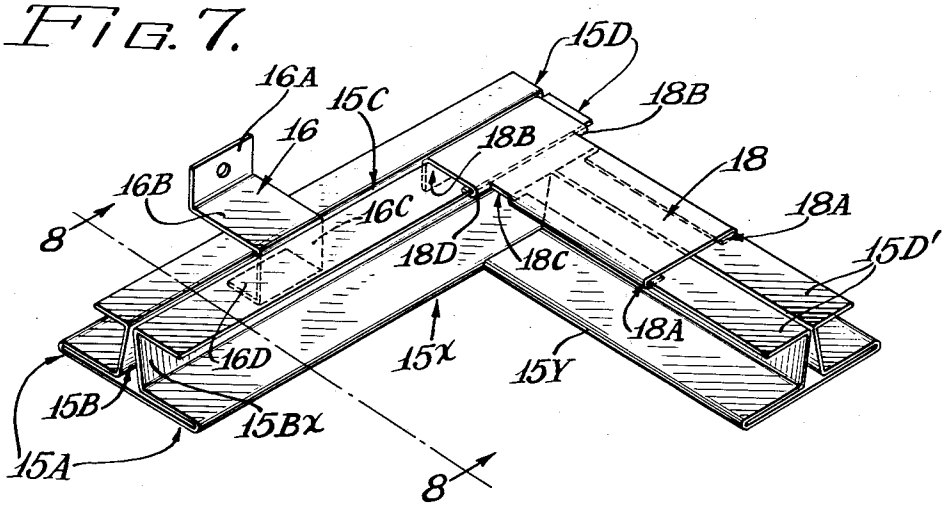

Fig. 8.

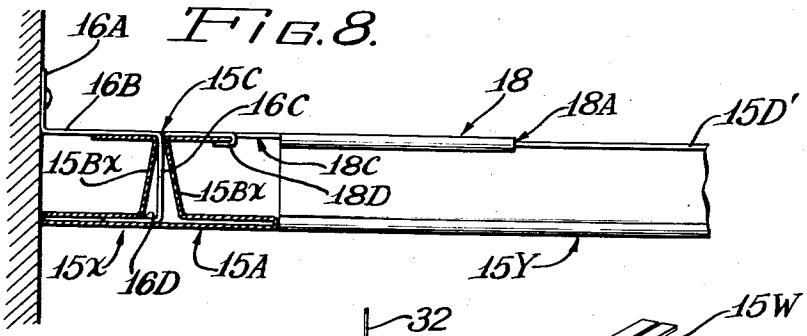

Fig. 9.

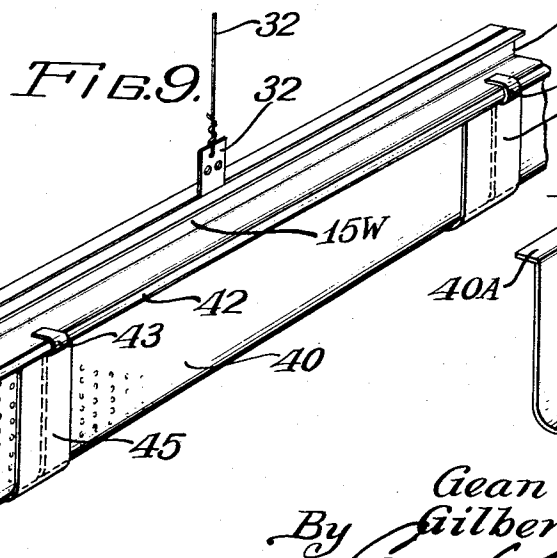

Fig. 11.



Fig. 10.

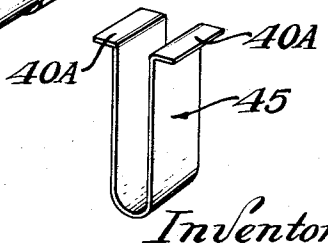

Inventors:
Gean Smith
Gilbert Tuten
By Allen & Limbach Atty.

United States Patent Office 2,971,617
Patented Feb. 14, 1961

2,971,617

CEILING STRUCTURE

Gean Smith and Gilbert Tuten, Chicago, Ill., assignors to L. J. Segil Co. (Inc.), Chicago, Ill., a corporation of Illinois

Filed Dec. 14, 1953, Ser. No. 397,946

10 Claims. (Cl. 189—85)

This invention pertains to improvements in virtual ceiling structures such as luminescent ceilings consisting of spans of translucent plastic sheeting supported in a track structure beneath an actual ceiling.

The principal object of this present disclosure relates to the provision of improvements in the track structure, and especially in the track sections and the coupling and suspension means therefor employed in assembling a track system.

More particularly, the invention affords a track section which is constructed from rolled sheet mettal to provide a hollow track somewhat analogous in cross section to an I-beam and having hollow bottom flanges and a hollow central web between the bottom flanges and top flanges, there being a longitudinal channel slot extending along the top of the track section between the top flanges to receive certain hanger bracket and coupling inserts.

Another object is the provision of coupling inserts of especial configuration which fit endwise into the hollow or channel portions of the tracks to join contiguous sections.

Another object is the provision of especially shaped wall hanger and suspension brackets adapted to interlock slidably with the channel and slot formations in the track sections.

Still another object is the provision of an angle coupling for joining track sections which are at right angles to each other, said coupling also utilizing the channel slot feature of the tracks.

Yet another important object is the provision of a novel track-entrance structure and closure means therefor for opening the track for admission or withdrawal of plastic sheeting; together with shield means for the entrance sections as well as the insert couplings.

Other objects and aspects of novelty and utility pertain to details of the form and assembly of track structure components described in view of the annexed drawings, in which:

Fig. 1 is a perspective detail of the new ceiling structure;

Fig. 2 is a perspective detail of a track entrance section in the ceiling structure;

Fig. 3 is a perspective view of a track insert coupling;

Fig. 4 is a perspective detail of a track shield sleeve and coupling;

Fig. 5 is a cross-section taken along lines 5—5 of Fig. 2;

Fig. 6 is a cross-section taken along lines 6—6 of Fig. 2;

Fig. 7 is a perspective detail of an angular coupling and wall angle juncture;

Fig. 8 is a cross-section taken along lines 8—8 of Fig. 7 with parts shown in elevation;

Fig. 9 is a perspective view of a track section with acoustic baffle and mounting means therefor;

Fig. 10 is a perspective detail of a baffle junction shield;

Fig. 11 is a perspective detail of a baffle hanger clip;

Fig. 12 is a magnified fragmentary detail of the end of a spacer rod.

Referring to Fig. 1, the illustrative ceiling structure comprises a track section **15** which has somewhat the cross-section of an I-beam, and is particularly characterized (see also Fig. 7) in that it is hollow in its bottom lateral foot-flanges **15A** and also in its vertical web portion **15B**, and has a longitudinally-extending passage or open channel slot **15C** along the top and center of the track between the top lateral top flanges **15D**, the latter flanges being of lesser width than the bottom flanges **15A**.

A further characteristic of the new track section structure is the pitched or slanted attitude of the two central web walls **15BX** (Figs. 7 and 8) whereby the hollow section is strengthened and a wide passage is afforded at the bottom for admission and manipulation of the wall brackets **16** (Figs. 1, 7, and 8), as well as certain hanger brackets to be described. This angular web configuration also affords a firm interfit with certain other coupling inserts, the top slot **15C** permitting limited crosswise yieldability to facilitate entry of such inserts, as will later appear.

In the most common-type of installation in a rectangular room, wall-track sections **15X**, **15Y** are mounted along the four walls at the desired datum or snap line, by means of the wall brackets **16**, which are slid into the endwise openings in the hollows of the tracks, these wall brackets having a hook-shaped outer end portion which is shaped to interfit and interlock with the internal configuration of the channeling in the hollow track sections.

More particularly, with reference to Figs. 7 and 8, the wall brackets **16** have an offset outer end **16A**, from which extends a horizontal span **16B** to overlie the track, and this span is further offset to provide a bight portion **16C** adapted to slide along the central channel or slot **15C** in the track, the bracket bight terminating in another, reentrantly-turned horizontal foot or end portion **16D** which projects back into the cavity of the foot or base flange portion **15A** of the track.

Thus, the hook-shaped hanger or end portions **16B**, **16C**, **16D** of the wall hanger brackets slidably interfit and lock with the offset internal passages or channeling of the hollow track sections.

In Fig. 1, only two of the wall track sections **15X**, **15Y** and shown on adjoining walls, it being understood that in the usual four-walled room each wall will be provided with a span of the so-called wall-track sections, the contiguous ends of which are joined by special angular corner couplings such as shown in Fig. 7, and each consisting of a sleeve section **18** with opposite edge portions turned over to provide edge-gripping channels **18A**, and a pendant endwise flange **18B** at one end of the sleeve and adapted to project down into the open channel

slot 15C of one wall track 15X while the appertaining sleeve portion 18 of this coupling grips the upper flanges 15D' of the angularly adjoined wall track section 15Y.

The corner couplings are provided with tabs 18D positioned in spaced relation to the bracket-channel flanges 18B thereof so as to be deformable around the edge of the appertaining top-flange edge which is juxtaposed to the confronting lateral endwise edges of the top flanges in the contiguous wall track section 15Y. When these crimping ears or tabs are turned over (as in Fig. 7), and set (by using a pair of pliers) the joint is complete.

The gap otherwise existing between the top flange of section 15X and the lateral end of the adjoining section 15Y (because the top flange portions of the tracks are narrower than the bottom flange portions) is bridged over as at 18C, and there is no substantial light leakage or exposed structure at these junctures.

Referring to Fig. 1, the track assembly will further include a plurality of intermediate parallel track sections 15Z spaced apart uniformly, usually on about 36" centers, so as to receive and support runs of corrugated, translucent, plastic sheeting 20, the opposite longitudinal edges of which rest upon the oppositely facing bottom flanges 15AZ of each pair of track sections, special track-entrance openings 21 being provided at intervals in order to admit the leading end of a roll of plastic sheeting, as depicted in Fig. 1, so that the run of plastic may be fed readily into the track (or withdrawn therefrom) by an easy unrolling (or rolling-in) action.

The expeditious insertion and withdrawal of the plastic panel material is an important advantage of this type of luminescent ceiling, and the novel track structure disclosed affords a track-entry means which can be opened and closed, and which also serves to couple the tandem track sections in each span, eliminating the necessity for especially constructed entry sections and making possible the use of standardized sections for use at the wall, the entrance stations, and in the intermediate runs, as well.

The novel entrance-section means is shown particularly in Fig. 2, where the tandem ends 15E and 15F of two spans of track are shown joined by a special insert coupling 27 of the configuration detailed in Fig. 3, and consisting of a pair of divergent bottom flanges 27A, joined by a triangularly shaped bight or web 27B, the two webs of the triangular bight being pitched at substantially the same angle as the channel webs 15BX in the track sections (as in Fig. 6), so that the insert couplings 27 interfit slidably but firmly with the divergent lower track flanges 15A and appertaining hollow webs, and afford a substantially rigid interconnecting support for two tandem sections while contributing a bottom track flange portion 27, which is in effect a continuation of the otherwise interrupted bottom or track flange portions 15A of the interconnetced tandem sections, and supports the plastic sheeting in this region while leaving a top entrance opening therefor, since there are no top flanges on the insert couplings.

Means for slidably closing the track entrances includes a narrow sliding sleeve 28 in the form of a plate with opposite edges turned back and under and spaced apart to provide opposite edge channels 28A slidably fitting around the edges of the top flanges of the track sections and in effect clamping the assembly against lateral spreading across slot 15C.

One of the entrance closure sleeves 28 is provided on each of the tandem ends of the component track sections in a run or span (as in Fig. 2), said closure sleeves being slid toward each other to meet and close the entrance opening, as depicted in dotted lines. One long sleeve may be substituted for a pair.

Means for shielding the bottom of the insert coupling includes the bottom sleeve 29 shown in Fig. 3, which is identical in construction to the top closure sleeves 28 except that the bottom sleeve is wider, laterally, in order to span the lateral distance across the wider bottom flanges 27A of the insert, said sleeve having reentrant slide grooves or channels 29A interfitting with the edges of said bottom flanges, as in Figs. 2 and 5.

Suspension of the intermediate spans of track is facilitated by the novel, open-top channel slots 15C of the track sections and provision of special track hangers (Fig. 2) consisting of a vertical shank plate 30 having oppositely diverged feet 31 fitting into the cavities in the opposite bottom flanges 15A of the tracks with the plate 30 slidable in the top opening or channel slot portion 15C thereof to whatever position is desired, a suspension wire 32 from the actual ceiling being dropped and attached in one of several pre-punched holes in said hanger bracket, as in Figs. 1 and 2.

Means for laterally interspacing the several intermediate track spans includes rods 33, each of the opposite ends of which is provided (Fig. 12) with stamped shoulders or nibs 33A acting as stops when these ends are inserted in one of the several spacer-rod seating holes 35 in an opposite pair of hanger brackets 30, the protruding ends of these rods being held by spring gripper washers, 33B.

Each hanger bracket 30 has three holes punched in its shank, one for the hanging wire 32, and two others each adapted to receive one of the ends of two spacer rods extending in opposite directions on each side of the bracket. The divergent feet 31 of the hanger brackets in the shallow channels of the bottom track flanges afford stable support and rigidity for seating the spacer rods.

In long spans there will be a plurality of track sections extended in tandem or end-to-end relation, but there may not necessarily be a track entrance 21 at every section juncture, and in such cases the conjunction is effected by use of an insert coupling 27 (Fig. 3) inserted endwise into the cavities of the contiguous ends of the joined sections, with a top sleeve 28' covering the top flanges, as in Fig. 1.

Moreover, long-span installations frequently require a short laterally-extending dividing track section, identical to the sections 15Y shown in Fig. 1, to terminate the lateral margin of a run of plastic sheeting, either in a main continuing span or at the termination or beginning of an irregular jog in a wall.

The length of a run of plastic sheeting is fixed at about 25 feet, and where a track section must extend beyond that distance, the end of the run is commonly terminated in a lateral or dividing track section 15YY, like the sections 15Y.

In a case where the run might be 35 feet, the distance would usually be cut about in half by insertion of a dividing track section at the mid-point, so that two spans of plastic sheeting of 17½ feet each would be employed, one on each side of the dividing track.

An advantage flowing from the novel hollow track sections with top channel slotting, and the disclosed corner or angle coupling means, will appear from examination of the two adjacent angle couplings 18' (Fig. 1) and the manner in which they are enabled to meet along a common line 18X with their respective pendant channel flanges (such as 18B, Fig. 7) extending into the same longitudinal top slot 15C in the track.

Since the so-called dividing tracks are identical to the sections 15Y, except that they may appear anywhere along the mid-regions of a span and not merely at the wall and do not employ wall hangers 16 (although they may use hanger brackets 30), the angle couplings 18 will be used exactly as in Fig. 1 and are usable anywhere along the track structure, because the track slotting 15C appears in every section of track.

Where acoustic treatment of the room is specified, the identical track-section structure of Fig. 1 is employed and

the acoustic baffles **40** (Fig. 9) have their divergent flanges **41** fitted into a long section of baffle-sleeving **42**, which is structurally identical to the sleeve means **29** of Fig. 4, only longer, so as to be coextensive with the track section **15W**, the baffle sleeves being attached to the bottom flanges of the track section by small edge clips **43** (Fig. 11).

Baffle coupling shields **45** (Fig. 10), having divergent top flanges **40A**, are fitted over the meeting line of contiguous baffle sections, and are held in place by the same U-shaped clips **43** employed to suspend the baffle sections.

We claim:

1. In a ceiling framework structure, track sections comprising hollow elongated members having hollow, oppositely divergent bottom flanges and correspondingly divergent top flanges joined to the bottom flanges by a hollow web, the opposite walls of which slope toward each other upwardly into conjunction respectively with one of said top flanges to define therebetween a narrow top slot along the length of the section; together with coupling means joining said members end to end and respectively comprising an elongated member having a pair of laterally-divergent bottom flanges joined to an upwardly projecting longitudinal rib which is widest near said bottom flanges and has opposite side walls which slope upwardly toward each other fitting telescopingly into the sloping web of said track section with the bottom flanges of the bottom section also telescoped into the hollow bottom-flange portion of said track section.

2. In a track structure for ceilings of the type employing tubular section members joined end to end by telescoping coupling means, improvements comprising: elongated track sections formed of metal turned back upon itself so as to have a substantially hollow cross section of approximately I-beam character with top and bottom lateral flanges joined by a hollow central web formed by two walls each sloping upwardly from one of said bottom flanges into conjunction with an appertaining one of the top flanges whereby said top flanges are spaced apart by a narrow slot running the length of the section; together with a coupling member joining spans of said sections end to end and also formed by thin metal with a pair of opposite flanges joined to a tapering median flange of approximately V-shaped cross section with its widest portion adjacent the said flanges and telescoped into the hollow of the central web of the track section aforesaid with the flanges of the coupling member telescoped into the hollow portions of the bottom flanges of the track section.

3. The construction set forth in claim 2 further characterized by the inclusion of a flat top sleeve having narrow sleeve grooves along opposite edges and each slidably interfitting with the edge region of one of the top flanges on an appertaining track section to restrain the latter flanges from diverging, whereby to maintain cross-sectional shape of the hollow web for optimum interfit with said coupling member in the region of said hollow web and said median flange.

4. In a structural assembly an elongated hollow beam comprising at least two spans aligned end to end and each having approximately the cross-section of an I-beam having a pair of bottom flanges joined to a pair of top flanges by a hollow central web portion, the latter being tapered and said bottom flanges being hollow and the web portion being widest at its bottom conjunction with the bottom flanges and narrowing upwardly into conjunction with the top flanges; said spans being joined by a coupling member consisting of an upstanding, median, tapered flange widening downwardly from an apex portion into conjunction with a pair of bottom flanges, and said tapered median flange being telescoped into said hollow web portion of the beam with said bottom flanges of the coupling member likewise telescoped into said hollow bottom flanges of said spans whereby to join two of the latter in an end-to-end relationship; and a flat sleeve slidable endwise onto the top flanges of the contiguous end portions of said joined spans to grip said flanges against lateral spreading and prevent widening of said hollow central web portion.

5. Track beams and coupling means therefor for use in a ceiling structure and comprising elongated, hollow sections formed of sheet metal with approximately I-beam cross-section with a pair of hollow bottom flanges each joined to a top flange by a sloped web portion, said web portions sloping upwardly toward each other into near contiguity to define a narrow, longitudinally-extending top opening communicating into the hollow web space between said web portions; and angle coupling means for use in joining two of said track sections at right angles to each other and including a flat sleeve slidable endwise onto the top flanges of a first one of said joined sections and having a lateral depending flange fitting into said top opening in the other track section, together with tab portions turned back around the edge of the nearer top flange on said other track section.

6. A sheet-metal beam having at least a pair of hollow bottom flanges each joined to one of a pair of substantially overlying top flanges by a sloping web convergently directed toward the other said top flange; and an insert member comparable with said beam and having a pair of bottom flanges joined by webs extending upwardly into conjunction along a substantially median line between said flanges and above a plane containing the latter, said insert member having a cross-section fitting endwise into the hollow portions of said beam with the bottom flanges and the web of the latter respectively receiving the bottom flanges and the web of the insert member, said webs being of complementary shape so as to interfit closely in telescoping relationship.

7. In a subceiling structure supported beneath a main ceiling, spans of parallel channel tracks for supporting translucent sheeting along opposite edges thereof, said tracks comprising elongated hollow track sections having track channels formed by substantially overlying top and bottom flanges disposed along opposite sides thereof, at least some of said spans being formed by a plurality of said track sections conjoined in end to end alignment by coupling means telescoped endwise into the hollow portions thereof, each section having a hollow bottom sleeve portion defining said bottom flanges and a pair of spaced webs pitched toward each other into near convergence to define a long, hollow central channel of approximately triangular cross-section with each said web near the convergent portion thereof spaced from the other to provide a longitudinal top entrance slot, and each offset therefrom to define one of said top flanges, said coupling members comprising a pair of flanges fitting into said bottom sleeve and joined together by converging sloping sides forming a long central rib of approximately triangular cross-section and fitted telescopingly into said central channel of the conjoined track sections, and means for supporting said spans beneath the main ceiling as aforesaid.

8. A structure according to claim 7 in which said supporting means includes flat supporting brackets having portions entering said longitudinal top slot and portions offset therefrom to engage in the hollow of at least one of said bottom flanges.

9. A structure according to claim 7 further characterized by the provision of track entrance openings for admitting said sheeting into said channels through a gap in said top flanges without interruption in the bottom flange underlying said gap, said entrance openings being formed in certain of said spans by spacing the conjoined ends of the appertaining track sections longitudinally apart a predetermined distance and joining said ends with a said coupling member having a length to span said predetermined distance and also to telescope into each of said ends a substantial distance to supportably couple said

track sections, said flanges on the coupling member being substantially the width of the bottom flanges on said sections to offer a substantial continuation of the appertaining bottom flanges beneath said track entrance openings.

10. The structure of claim 9 further characterized by the provision of slidable closure means for said entrance openings and comprising an elongated plate having opposite longitudinal edge portions turned into slide grooves respectively fitting over the opposite longitudinal edges of said top track flanges and of a length substantially greater than said predetermined distance so as to span said entrance opening and slidably engage top flanges of both conjoined track sections defining said opening.

References Cited in the file of this patent

UNITED STATES PATENTS

1,825,010	Murphy	Sept. 29, 1931
2,066,227	Reukauf et al.	Dec. 29, 1936
2,150,344	Schilling	Mar. 14, 1939
2,152,418	Olsen	Mar. 28, 1939
2,229,064	Finch	Jan. 21, 1941
2,307,653	Wright	Jan. 5, 1943
2,349,158	Fowles et al.	May 16, 1944
2,481,794	Stitt	Sept. 13, 1949
2,531,349	Brett	Nov. 21, 1950
2,767,815	Brandstetter et al.	Oct. 23, 1956

FOREIGN PATENTS

176,013	Great Britain	Mar. 9, 1922