(12) INNOVATION PATENT
(19) AUSTRALIAN PATENT OFFICE

(11) Application No. **AU 2013100744 A4**

(54) Title
External thread Machining Device

(51) International Patent Classification(s)
B23G 1/02 (2006.01)

(21) Application No: **2013100744** (22) Date of Filing: **2013.05.27**

(45) Publication Date: **2013.06.27**
(45) Publication Journal Date: **2013.06.27**
(45) Granted Journal Date: **2013.06.27**

(71) Applicant(s)
ZHEJIANG LINIX SOLAR CO.,LTD

(72) Inventor(s)
ZHANG, Jingguo

(74) Agent / Attorney
Admiral Trademarks & Patents Services, PO Box 767, Miranda, NSW, 1490

20131100744 27 May 2013

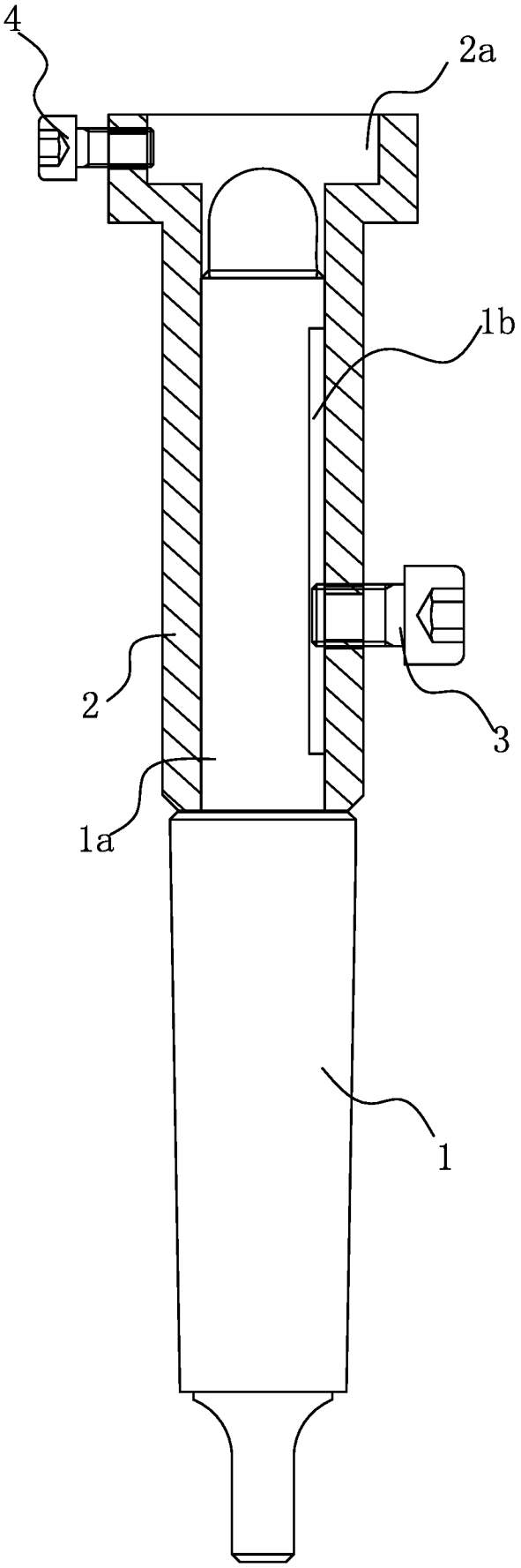

FIG. 1

20131100744 27 May 2013

Title: External thread Machining Device

Abstract

The invention relates to a structure improvement for an external thread machining device mounted on a lathe, comprising a tap shank connected with a tailstock of the lathe and a threading die sleeve capable of being sleeved on a workpiece. The threading die sleeve and the tap shank are arranged coaxially. The threading die sleeve and the tap shank are in axial sliding connection, an axial bar chute is provided on the tap shank, and a guide positioning pillar which is able to resist against the interior of the bar chute is arranged on the threading die sleeve.

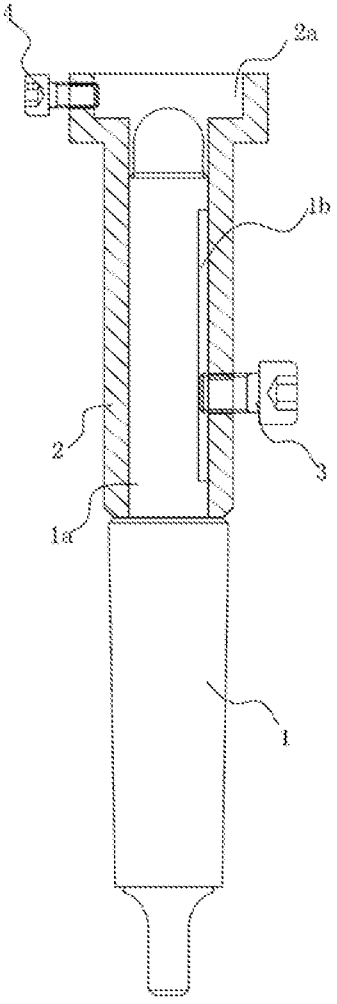

2013100744 27 May 2013

Description

External thread Machining Device

Technical Field

The invention relates to a thread machining device, in particular to a structure improvement for an external thread machining device mounted on a lathe.

Background of the Invention

A depth controllable thread tapping device (Application No.: CN03277854.6) was disclosed, comprising a tap shank and a screw tap, characterized in that a front end of the tap shank is provided with a chuck, a sliding sleeve and an adjusting sleeve; the chuck is mounted in an inner hole of the tap shank and is in clearance fit with the tap shank, the hole wall of the tap shank is provided with a steel ball for driving the chuck to rotate, an outer side of the steel ball comes into contact with the sliding sleeve on the tap shank, the aperture of a front section of the sliding sleeve is larger that that of a rear section, an axial limiting component and a pressure spring are respectively in front of and behind the sliding sleeve, the adjusting sleeve is located on an outer circumference of the chuck and is in threaded connection with the sliding sleeve, the screw tap passes through a hole on a front end of the adjusting sleeve to be clamped on the chuck, and a small radial hole of the chuck is mounted with a spring and a rotation-following pin of which the extension end is a slope. This device may make the specification of threads machined each time tend to be uniform. However, the whole structure of this device is complex, resulting in inconvenience in both operation and use and high manufacture cost.

Summary of the Invention

The purpose of the invention is to provide an external thread machining

20131100744 27 May 2013

device, which may be assembled on a lathe for automatic thread machining, and which is convenient for operation, high in working efficiency and reliable in precision of machined workpieces. The invention solves the technical problem in the prior art of low working efficiency, low precision of machined workpieces and time and labor consuming for operation.

The above technical purpose of the invention is mainly achieved by the technical solution as follows: an external thread machining device is provided, arranged on a lathe, comprising a tap shank connected with a tailstock of the lathe and a threading die sleeve capable of being sleeved on a workpiece, the threading die sleeve and the tap shank being arranged coaxially, characterized in that the threading die sleeve and the tap shank are in axial sliding connection, an axial bar chute is provided on the tap shank, and a guide positioning pillar which is able to resist against the interior of the bar chute is arranged on the threading die sleeve.

In the invention, the tap shank and the threading die sleeve, which are arranged coaxially, are creatively fixed on the lathe, and the tap shank and the threading die sleeve are fixed through the guide positioning pillar, thereby avoiding any axial movement and rotation left and right between the tap shank and the threading die sleeve, so that threads may be set conveniently for the workpiece to be machined. During the machining process of the threads, the threading die sleeve gradually moves in an axial direction by the fitting of the threads, so as to realize the purpose of machining external threads on the outer circumferential surface of the workpiece. After machining is completed, the workpiece is driven to turn around by a main shaft of the lathe, so that the threading die sleeve and the workpiece are separated from each other under the action of the threads, and the threading die sleeve moves axially to reset. When it is required to change the set threads, the guide positioning pillar is loosen, so that the tap shank and the threading die sleeve may move relatively, the threads are thus reset.

Therefore, the invention has the advantages as follows: first, machining

20131100744 27 May 2013

by a lathe effectively overcomes the defects existing in the primary manual methods, the operation is very convenient, the working efficiency is improved and the precision of the products is also guaranteed; second, the invention is simple in structure, low in manufacturing cost and good in working stability; and third, the specification of the machined workpieces is uniform as the threads may be settable, and the specification may be adjustable according to actual demands.

Brief Description of the Drawing

Fig. 1 is a partially sectional structure diagram of the invention.

Detailed Description of the Invention

The technical solutions of the invention will be further described in details as below by embodiments with reference to drawings.

Embodiment 1

As shown in Fig. 1, an external thread machining device is provided, arranged on a lathe, comprising a tap shank 1 connected with a tailstock of the lathe and a threading die sleeve 2 capable of being sleeved on a workpiece. The threading die sleeve 2 and the tap shank 1 are arranged coaxially. The threading die sleeve 2 and the tap shank 1 are in axial sliding connection. An axial bar chute 1a is provided on the tap shank 1. A guide positioning pillar 3 which may resist against the interior of the bar chute 1a is arranged on the threading die sleeve 2. The guide positioning pillar 3 is penetrated on a wall of the threading die sleeve 2 in a radial direction, the guide positioning pillar 3 and the threading die sleeve 2 are in threaded connection with each other, and an end of the guide positioning pillar 3 may resist against the interior of the bar chute 1a for connecting the threading die sleeve 2 and the tap shank 1 together.

The threading die sleeve 2 is sleeved on the tap shank 1, a sleeve head 2a is arranged on a front end of the threading die sleeve 2, and a fixed pillar 4

2013100744 27 May 2013

is arranged on the sleeve head 2a. The fixed pillar 4 is penetrated on a wall of the sleeve head 2a of the threading die sleeve 2 in the radial direction, and the fixed pillar 4 and the sleeve head 2a are in threaded connection with each other. The tap shank 1 is provided with a sleeve pillar 1b on which the threading die sleeve 2 is sleeved, and the outer diameter of the sleeve pillar 1b is a little bit smaller than the inner diameter of the threading die sleeve 2. Common bolts may be adopted for the guide positioning pillar 3 and the fixed pillar 4.

When in use, the tap shank 1 and the threading die sleeve 2 are connected through the guide positioning pillar 3 for conveniently setting threads for the workpiece to be machined. During the machining process of the threads, the threading die sleeve 2 gradually moves in the axial direction by the fitting of the threads, so as to realize the purpose of machining external threads on the outer circumferential surface of the workpiece. After machining is completed, the workpiece is driven to turn around by the main shaft of the lathe, the threading die sleeve 2 and the workpiece are separated from each other under the action of the thread, and the threading die sleeve 2 moves axially to reset. When it is required to change the set threads, the guide positioning pillar 3 is loosen, so that the tap shank 1 and the threading die sleeve 2 may move relatively, the threads are thus reset.

2013100744 27 May 2013

Claims

1. An external thread machining device, arranged on a lathe, comprising a tap shank connected with a tailstock of the lathe and a threading die sleeve capable of being sleeved on a workpiece, the threading die sleeve and the tap shank being arranged coaxially, characterized in that the threading die sleeve and the tap shank are in axial sliding connection, an axial bar chute is provided on the tap shank, and a guide positioning pillar which is able to resist against the interior of the bar chute is arranged on the threading die sleeve.

2. The external thread machining device according to claim 1, characterized in that the guide positioning pillar is penetrated on a wall of the threading die sleeve in a radial direction, the guide positioning pillar and the threading die sleeve are in threaded connection with each other, and an end of the guide positioning pillar may resist against the interior of the bar chute for connecting the threading die sleeve and the tap shank 1 together.

20131100744 27 May 2013

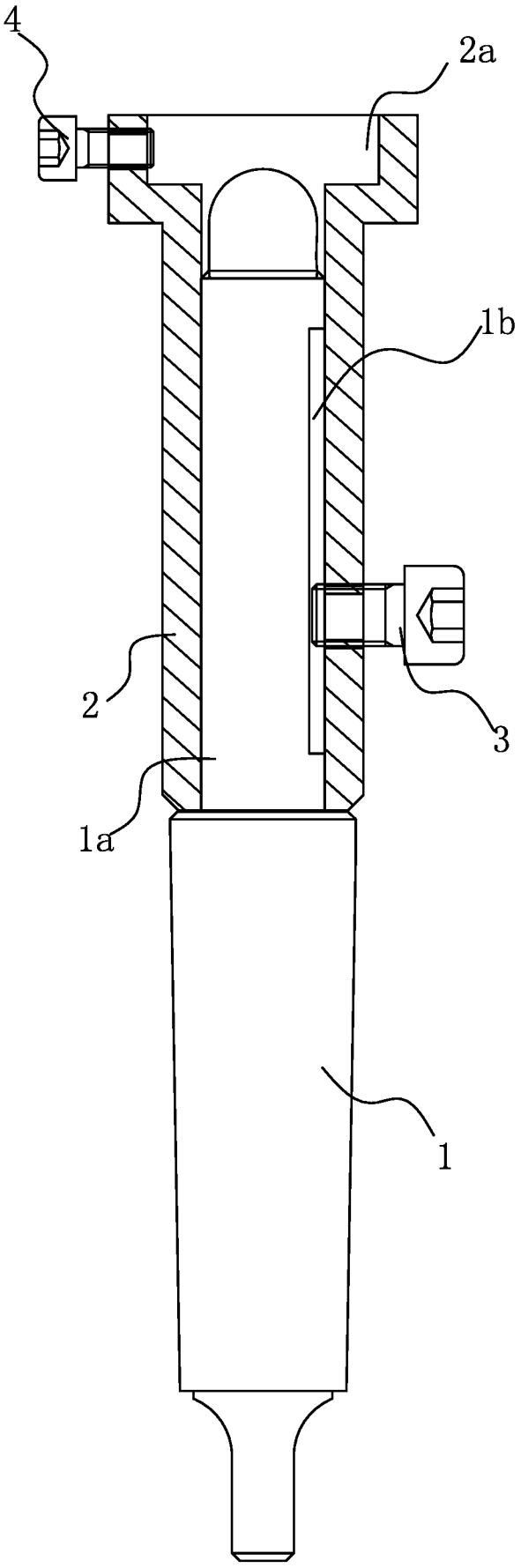

FIG. 1