Aug. 16, 1955 J. A. DE JUREN 2,715,695

ION PRODUCING MECHANISM

Filed June 19, 1947

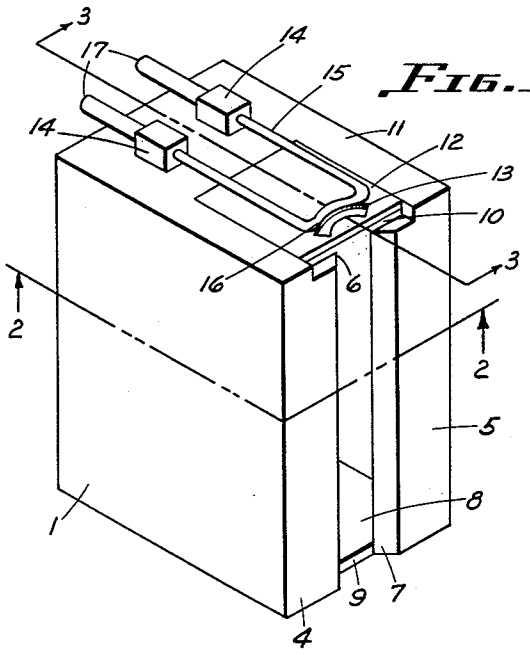

FIG. 1.

FIG. 2.

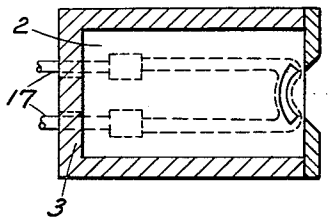

FIG. 4.

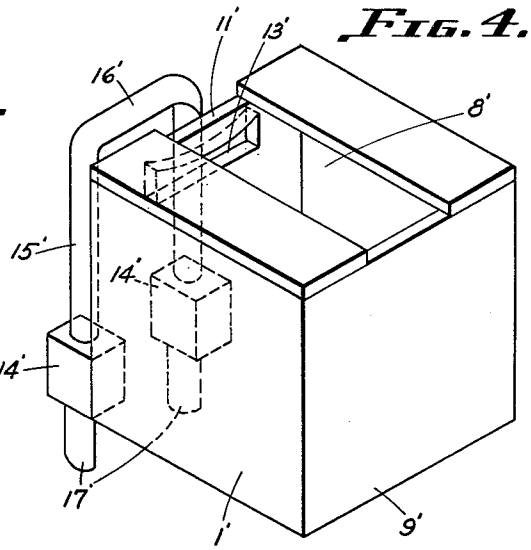

FIG. 3.

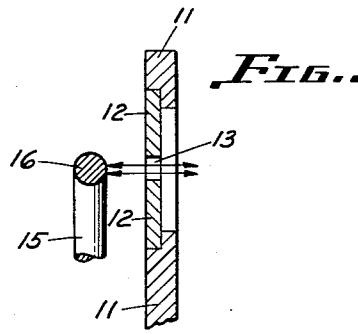

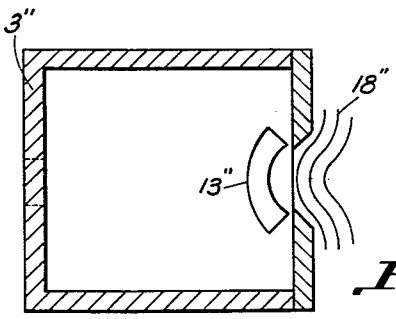

FIG. 5.

INVENTOR.
James A. DeJuren
BY
Robert A. Lavender
Attorney

United States Patent Office 2,715,695 Patented Aug. 16, 1955

2,715,695

ION PRODUCING MECHANISM

James A. De Juren, Berkeley, Calif., assignor to the United States of America as represented by the United States Atomic Energy Commission

Application June 19, 1947, Serial No. 755,551

5 Claims. (Cl. 313—63)

My invention relates to ion sources, and more particularly to ion producing mechanisms for electromagnetically operated equipment for the separation of isotopes of elements.

It is the practice in the separation of isotopes of elements to vaporize a charge material through heating, subject the vapors to electron bombardment in an ionizing chamber to ionize them, eject the ions from the chamber, and accelerate them in arcuate paths whose radii correspond to their respective masses, and then collect the ions at or near the focal points of the ion beams. The ionizing source usually takes the form of an electric arc parallel to the magnetic field of the equipment between a hot filamentary cathode and a plate anode. This arc is comprised of ions and electrons in equilibrium forming a plasma in vapor containing the desired type of atom. A defining slot is formed in a separate plate next adjacent to the cathode, separating the cathode from the main part of the arc. Since the electrons in such a system can move essentially only parallel to the magnetic field, the slot in the defining slot plate, if it is smaller than the cathode and opposite the cathode with respect to the magnetic field, will define the cross section of the arc beyond it. The defining slot and plate also perform the additional function of reducing the vapor in the region of the cathode and reducing the ion bombardment.

As originally conceived the conventional ion source employed a rectangular defining slot opposite a straight section of cathode. The electrons passing through the defining slot then formed an arc of rectangular cross section of the same shape as the slot itself. It was from the plasma surrounding this arc column that the ions forming the beam were accelerated by the accelerating voltages of the equipment. By this action these accelerating voltages effectively pushed the plasma region back toward the arc core, producing a concave surface on the plasma facing the accelerating electrodes. This concave surface on the plasma was necessary for proper focusing of the ion beam, and its shape was critical for the successful operation of the unit.

The slot in the electron defining plate was ordinarily milled therein so that the arc may pass from the cathode at one end of the ionizing chamber to the anode at the opposite end of the chamber. With the rectangular type of defining slots commonly used in the prior art, a large proportion of the ions were produced in the center of the meniscus and constituted the major source of the ions passing out through the exit slit and on to the receivers. However, the lack of uniformity of cross section of the meniscus, particularly the reduced cross section thereof at the edges, tended to limit the current obtainable from the ion source. Also, in that arrangement the concentration of ions at the center of the arc and the flow of such ions towards the cathode as electrons flow towards the anode resulted in excessive cathode bombardment of the central portion thereof and caused frequent cathode failure.

Applicant with a knowledge of all of these defects in

and objections to the practices of the prior art has for an object of his invention the provision of an ion source with a barrier having a collimating or defining slot for producing an arc of substantially uniform ion density to increase the efficiency of the ion source and provide uniform ionization and flow of ions from the source to the electromagnetically operated equipment.

Applicant has as another object of his invention the provision of an ion source having an electron and ion barrier with an arc defining slot therein which will provide substantially uniform ionization and which will distribute and equalize ion bombardment of the cathode and tend to extend its useful life.

Applicant has as a further object of his invention the provision of an ion source having an ion barrier with a defining or collimating slot which has a constricted portion for providing an arc of substantially uniform ion density.

Other objects and advantages of my invention will appear from the following specification and accompanying drawings, and the novel features thereof will be particularly pointed out in the annexed claims.

In the drawings, Fig. 1 is a perspective of a box construction inclosing an ionizing chamber with one form of my improved ion barrier and defining slot incorporated therein. Fig. 2 is a cross section of the same construction taken along the line 2—2 of Fig. 1. Fig. 3 is a fragmental longitudinal section of the same construction taken along the line 3—3 of Fig. 1. Fig. 4 is a perspective of the box construction with ionizing chamber and exit slit and showing a modified form of barrier and defining slot. Fig. 5 is a detail of the ionizing chamber showing the electric field.

Referring to the drawings in detail, 1 designates a box of substantially parallelepiped configuration whose walls define an ionizing chamber 2. Charge in an adjacent or an adjoining chamber (not shown) is heated, and the vapors are allowed to flow from the charge chamber to the ionizing chamber. The size and shape of the charge chamber may be conventional or of characteristic type, and vapors may be fed to the ionizing chamber 2 through a controlled port or orifice in the rear wall 3 of the box 1 in conformity with usual practice. The forward end of the box 1 may have electrode plates 4, 5, with tapered edges 6, 7 mounted thereon in spaced relation to define a slit 8. The lower end 9 of box 1 may be in the form of a plate and serve as the anode. The upper end 11 of box 1 is cut away at 10 and a plate 12 with a defining slot 13 therein may be mounted over the cutaway portion. Carried by the plate 11 are insulators 14, 14 which serve to mount the filament 15 over plate 12 so that the larger intermediate portion 16 is in alignment with the smaller defining slot 13 in the plate 12. Leads 17, 17 supply the filament with heater current.

The box 1 and particularly the end plate 11 is customarily made from carbon, but the flow through slot 13 tends to clog or fill it with crud and to eat away the carbon. As indicated in the detail of Fig. 3, that tendency is somewhat overcome by using a plate 12 of tungsten or other appropriate material and countersinking or recessing it in the wall or plate 11 of the box 1. It was discovered that tungsten will withstand the pitting effects and ion bombardment to which the barrier is subjected, and that the walls of the defining slot will not be appreciably eaten away by such action.

In the modification of Fig. 1 it will be noted that the curvatures of the walls defining the slot 13 are not uniform and that the outer wall of the slot has a much flatter curvature than the inner wall. Under these circumstances, a slot having a constricted central portion is formed, that is, the ends of the slot are wider than the central portion. Fig. 2 shows how this slot configuration

brings the ends of the arc defined by it towards the edges of the ion exit 8 where it will not be shielded from the accelerating electrode potentials which act upon the arc and eject the ions. Again the constricted central portion and wider end portions of the slot tend to define an arc of substantially uniform thickness and insure greater efficiency for the ion source since the whole of the arc effectively provides ions for the electromagnetically operated equipment. In addition, the constricted central portion of the slot limits ion flow through slot 13 at the center and prevents concentrated ion bombardment of the center 16 of the cathode 15. This equalization of the ion bombardment tends to increase the useful life of the cathode and reduce failures and stoppages.

In its operation, cathode 15 is at a negative potential with respect to plates 9 and 12 and electrons are emitted therefrom. They are accelerated through defining slot 13 across chamber 2 to anode 9. Neutral gases are fed into ionizing chamber 2 from the charge chamber (not shown). The box 1 is disposed within the usual magnetic field of the instrument so that the electron path from cathode 15 to anode 9 is substantially parallel thereto. Electrons in this path bombard the atoms of the neutral gas in chamber 2 and ionize it. As ions are formed some of them float back toward cathode 15, neutralizing the space charge about the cathode and permitting a rush of electrons from the cathode to the anode. Under these conditions the flow of the charged particles strikes an arc and this arc forms a plasma where the particles are in equilibrium. The arc between cathode 15 and plate 9 due to the shape of the defining slot 13, and to the action of the accelerating voltage field, is arcuate in cross section and is of substantially uniform thickness. As the plate 12 acts as a grid element, it serves to shave the arc to conform to the defining slot. The curvature of the slot is such as to bring the ends of the arc close to the edges of the exit slit 8.

Another modification, disclosed in Fig. 4, employs a cathode 15′ having a substantially straight central portion 16′. The cathode 15′ is mounted on insulators 14′, and this cathode is fed by electrical leads 17′. The barrier 11′ is indicated as comprising one end of box construction 1′, and has a defining slot 13′ smaller than the alined cathode, with one wall of arcuate configuration while the other opposite wall is straight, providing a constricted central portion and wider end portions to alter the cross section of the arc across exit slit 8′ from the cathode 15′ to the anode 9′. The operation of this modification of my invention is similar to that of the modification of Fig. 1, previously described.

The use of a constricted collimating slot has the effect of increasing the ion supply at the edges of the arc relative to the center. As the plasma assumes a concave shape in the ionizing chamber, the electric field is as illustrated at 18″ in the accelerating gap of the construction of Fig. 5. For space charge and limited current which prevails, the current from an element is given by the equation:

$$i=K\frac{V^{3/2}}{X2}$$

In the above equation V represents the voltage and X the distance between equipotentials, as the distance between equipotential surfaces is smaller at the edges than

at the center, more current will be drawn from the edges of the arc than from an equal area at the center. Hence, the constricted curved slot gives better focusing and a larger beam than the rectangular type.

Having thus described my invention, I claim:

1. An ion producing mechanism of the character described comprising an ionizing chamber adapted to receive gaseous vapors, a cathode positioned outside of said chamber for striking an arc across it to ionize said vapors, an opening in the ionizing chamber to permit the egress of ions therefrom, and means providing a barrier having a slot with a constricted central portion for the passage of electrons to define an arc of substantially uniform ion density.

2. An ion producing mechanism of the character described comprising an ionizing chamber adapted to receive gaseous vapors, a cathode for supplying a stream of electrons to ionize said vapors, spaced electrode plates defining an opening in said chamber and providing an accelerating potential for the ejection of ions from said ionizing chamber, and means providing a barrier having an electron beam defining slot with an intermediate constricted portion positioned between the cathode and the ionizing chamber to provide an electron beam of substantially uniform ion density.

3. An ion producing mechanism of the character described comprising an ionizing chamber adapted to receive gaseous vapors, a cathode having a substantially straight portion positioned outside of said ionizing chamber for feeding a stream of electrons to said chamber to ionize the gas, spaced electrode plates defining an opening in said chamber and providing an accelerating potential for the ejection of ions from said ionizing chamber, and means providing a slotted barrier having a constricted intermediate portion positioned adjacent the cathode to provide an electron beam of substantially uniform ion density.

4. An ion producing mechanism of the character described comprising an ionizing chamber for the reception of gaseous vapors, for supplying a cathode stream of electrons to said chamber for ionizing the vapors therein, an opening for the egress of ions from the chamber, and means providing a barrier with a slot therein for the passage of electrons, said slot having walls of curved configuration defined by arcs of different radii positioned to provide a constriction in an intermediate portion of the slot insuring an arc of substantially uniform ion density.

5. An ion producing mechanism of the character described comprising an ionizing chamber for the reception of gaseous vapors, a cathode positioned outside of said chamber for striking an arc across it to ionize said vapors, an opening for the egress of ions from the chamber, and means providing a barrier with a slot therein for the passage of electrons, said slot having opposed curved walls, one of which is of flatter curvature than the other and positioned with respect thereto to define a central constriction and insure the formation of an arc of uniform ion density.

References Cited in the file of this patent

UNITED STATES PATENTS

2,427,484 West ---------- Sept. 16, 1947