Oct. 16, 1951 R. L. BARNHART 2,571,521

MARBLE RUNWAY

Filed June 6, 1950

FIG. 1

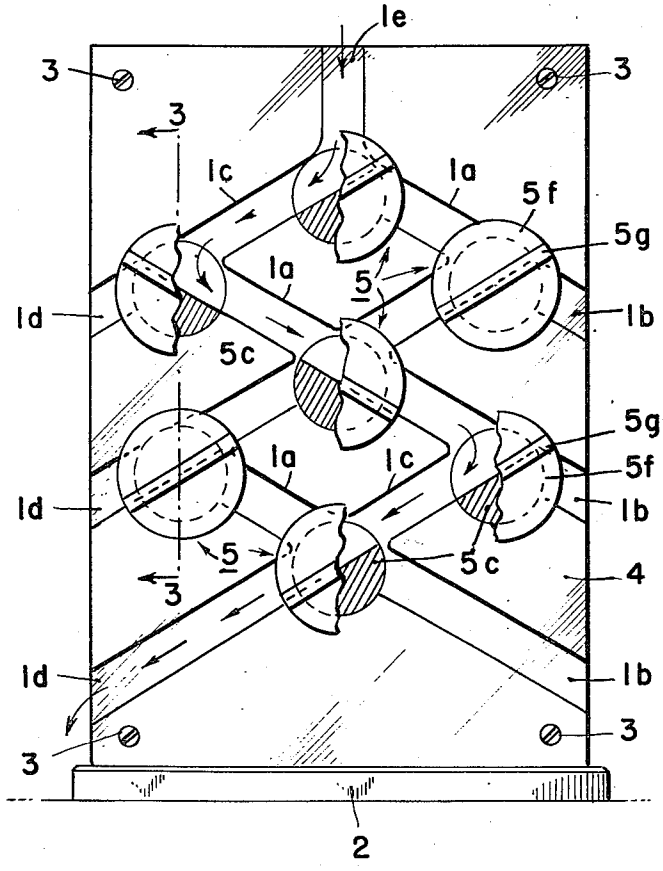

FIG. 2

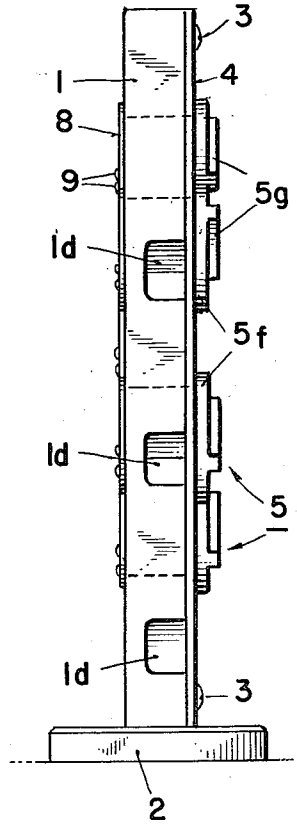

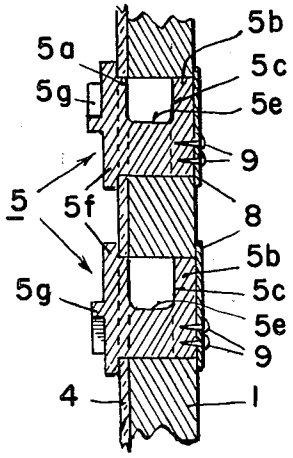

FIG. 3

INVENTOR
RICHARD L. BARNHART,

BY Babcock & Babcock

ATTORNEYS

Patented Oct. 16, 1951 2,571,521

UNITED STATES PATENT OFFICE

2,571,521

MARBLE RUNWAY

Richard L. Barnhart, Elizabethtown, Pa.

Application June 6, 1950, Serial No. 166,490

5 Claims. (Cl. 46—43)

1

This invention relates to a marble runway of the class which permits visual inspection of a marble as it passes therethrough.

It is a primary object of the invention to provide such a marble runway which serves both as an educational device as well as an amusement device, due to being provided with control means which may be set in various positions to establish a plurality of different paths of travel for a marble through said device.

More specifically, it is an object to provide such a runway having a plurality of relatively intersecting inclined passages or channels, wherein a valve or switch disposed at an intersection of said channels may cause the ball or marble either to pass straight across said intersection and continue in the same channel or to transfer to an intersecting channel.

It is a further object to provide in such a marble runway a novel arrangement embodying two series of relatively oppositely inclined marble channels, in which each channel in each series intersects and connects two or more channels of the other series, and valves are disposed to control the several intersections, whereby a marble may be directed along any of various downwardly inclined predetermined paths through interconnected channel portions under the control of the several valves, and caused to emerge from any of a plurality of outlet openings.

A still further object resides in the provision of a novel rotary valve or switch which is selectively operable to obstruct or block either of a pair of marble passages opening downwardly from its respective intersection, while providing a pathway for a marble between the unblocked downwardly opening passage and a passage opening into said intersection from above. Also, the invention comprises various improved details of construction of such a switch or valve and its assembly with the runway construction.

In this application I show and describe only the preferred embodiment of my invention, simply by way of illustration of the practice thereof as by law required. However I recognize that my invention is capable of other and different embodiments and that the several details thereof may be modified in various ways, all without departing from my invention. Accordingly, the drawings and description herein are to be considered as merely illustrative, and not as exclusive.

In the accompanying drawings:

Figure 1 represents a front elevation of a marble runway constructed in accordance with the preferred embodiment of the invention, portions of several of the valves being broken away to show their interior construction;

2

Figure 2, a side or edge elevation thereof; and,

Figure 3, a section on the line 3—3 of Figure 1, looking in the direction of the arrows.

Referring now in detail to the accompanying drawings, the preferred embodiment of the invention therein illustrated comprises a rigid board or backing 1 which is normally supported in a substantially upright or vertical plane, as by means of a usual base 2 secured to its lower end edge. The board 1 and base 2 may be formed of wood or other suitable material.

Formed in the front face of the board 1 are a plurality of relatively intersecting inclined channels or passages, which may include a series of inclined relatively vertically spaced channels 1*a* having their lower ends respectively opening outwardly through one side edge of the board, as at 1*b*, and a series of relatively oppositely inclined channels or passages 1*c* having their lower ends respectively opening outwardly through the opposite side edge of the board, as at 1*d*.

It will be noted that the uppermost channels 1*a* and 1*c* intersect each other and the board is provided with a marble inlet channel 1*e*, preferably through its upper edge, communicating with the intersection of said uppermost channels.

In this arrangement, each channel of each series intersects and provides a downwardly inclined passage between at least two of the channels or passages of the other series, whereby a ball or marble inserted in the inlet channel 1*e* may find a constantly downwardly inclined path to any one of the various outwardly opening mouths or outlet openings 1*b* or 1*d* of the respective channels.

Secured over the front face of the board 1, as by screws 3, is a rigid transparent cover plate 4 which is preferably formed of Plexiglas or other non-shatterable material or transparent plastic, though it may be of glass, isinglass or other conventional material.

Such a cover plate 4 closes the open fronts of the respective runway channels 1*a* and 1*c* to therewith define a series of tubular runway passages or channels, but permits ready visual inspection of the interior of said passages and any object passing therethrough.

At any of the various intersections of channels 1*a* and 1*c* there may be disposed a valve 5 operable to selectively place either of the channels 1a or 1c below said intersection in communication with any channel or channels opening thereinto

from above. In the preferred embodiment of the invention I prefer to dispose such a valve 5 at each of the various intersections, as in Figure 1. With this arrangement, the valves 5 may be set or positioned to selectively direct a marble from the inlet passage 1e to any desired outlet opening 1b or 1d, and in the case of each but the uppermost outlet openings 1b, 1d, more than one constantly downwardly inclined path may be established between the said inlet passage 1e and each of the several outlet openings.

The valves 5 are of the rotary type, each comprising cylindrical bearing portions 5a and 5b rotatably journalled in openings in the cover plate 4 and board 1 respectively, at a location coincident with one of the channel intersections. The axis of each said valve or switch 5 is equidistant from, and preferably coincident with the point at which the projections of the lower or bottom faces of the adjacent channels 1a and 1c intersect, all as shown in Figures 1 and 3. Extending through each said valve 5 transversely to the axis thereof is a passage 5c disposed for selective alignment with either of the associated channels 1a or 1c to bridge the intersection between the aligned portions of either of said channels and establish communication therebetween across the intersection, while also permitting communication between said passage 5c and any other channels opening into its respective intersection from above.

Preferably the passage 5c is formed merely by cutting away a semi-cylindrical segment between the bearing portions 5a and 5b of each valve 5, whereby the flat bottom 5e of the passage thus formed extends diametrically of the valve and may be rotated into alignment with the bottom side of either of the channels 1a or 1c controlled by said valve.

The front end of each said valve 5 projects exteriorly of the cover plate 4 to function as a manual control knob or dial for the valve. Preferably such a dial 5f is of greater diameter than the valve 5 to engage the cover plate 4 and prevent rearward axial displacement of the valve. If desired, the dial 5f may be provided with a combined position indicator and handle 5g in the form of a preferably integral bar extending diametrically in the same direction as the bottom 5e of the valve passage 5c, it being obvious that such a bar will afford a ready visual indication of the rotary position of the valve. However, such an indicator is not essential, since the transparent cover plate 4 will permit visual ascertainment of the rotational position of the valve passage 5c.

Such a valve 5 may readily be formed of wood, as well as other conventional materials, and inserted into position through the front of the board, whereupon it may be held against forward displacement by means such as a metal disc or plate 8 secured to its axially presented rear end by screws 9, the disc 8 being of greater diameter than the valve 5 and being adapted to abut against the rear face of the board 1 to prevent forward displacement or withdrawal of the valve. Such an arrangement obviously simplifies the assembling and dismounting of the valves 5.

The invention is particularly adapted for use as an amusement and educational device by children. In its use, which is believed to be apparent from the foregoing description, the object is to so position the various valves 5 (by manual manipulation of their respective handles 5g) as to cause a marble dropped into the inlet passage 1e to emerge through a preselected outlet opening 1b or 1d.

By way of illustration of this, in Figure 1 I have illustrated the various valves 5 arranged to cause passage of a marble from the inlet passage 1e to the lowermost outlet opening 1d along the zig-zag path indicated by the arrows. Obviously each valve 5 may be set or rotated to a position wherein it will cause the marble either to continue its downward movement straight across the intersection in the same channel 1a or 1c, or else to transfer to an intersecting channel and reverse its direction of travel.

Young children in particular will derive a certain amount of beneficial mental exercise and mechanical skill from the reasoning and manipulating required in so using the invention, and also will be entertained by witnessing the passage of marbles along the various paths so provided.

In the event any of the passages or valves should become clogged by foreign objects, as may be anticipated from time to time in such a child's device, the cover plate 4 and the several valves 5 may be readily removed in obvious manner to permit removal of such foreign object or matter.

Having thus described my invention, I claim:

1. A marble runway comprising a rigid board of rectangular shape and means supporting same in a substantially vertical plane, the front face of said board being formed with a series of inclined relatively vertically spaced channels having their lower ends respectively opening outwardly through one side edge of said board, and a series of relatively oppositely inclined vertically spaced channels having their lower ends respectively opening outwardly through the opposite side edge of said board, the uppermost channels of each series intersecting each other, a marble inlet channel communicating with the intersection of said uppermost channels, and a rigid transparent cover plate secured over the front face of said board to close the open fronts of said channels, in combination with a plurality of valves respectively rotatably journalled through said board and a cover plate at each of the intersections of said channels for selectively controlling the passage of a marble from each said intersection to either of the channels extending downwardly therefrom.

2. A marble runway comprising a rigid board and means supporting same in a substantially vertical plane, the front face of said board being provided with a series of inclined relatively vertically spaced channels having their lower ends respectively opening through one side edge of said board, and a series of relatively oppositely inclined vertically spaced channels having their lower ends respectively opening through the opposite side edge of said board, each said channel of each series intersecting two or more channels of the other series, and a rigid transparent cover plate secured over the front face of said board to close the open fronts of said channels, in combination with a plurality of valves, each rotatably journalled through said board and cover plate at one of the intersections of said channels for selectively controlling the passage of marbles through said intersections to either of the channel portions extending downwardly from each.

3. A marble runway comprising a rigid upright board having a plurality of relatively intersecting inclined channels formed in the front thereof, said channels respectively extending through the sides of said board, a rigid transparent cover plate secured over the front face of said board

and closing the fronts of said respective channels, and valves respectively rotatably journalled through said cover plate and said board at each of the intersections of said channels, said valves being manually rotatable to selectively control the passage of a marble from each said intersection to either of the channels extending downwardly therefrom.

4. A marble runway comprising a rigid upright board having a plurality of relatively angularly disposed inclined channels in its front face intersecting and crossing each other, a rigid transparent cover plate secured over the front face of said board and closing the fronts of said channels, and a valve rotatably journalled through said cover plate and board at each of the intersections of said channels, one end of said valve projecting externally of said cover plate for manual engagement, said valve being manually rotatable to selectively control the passage of a marble through said intersections to either of the channel portions opening downwardly therefrom.

5. A marble runway comprising a rigid upright board having a pair of oppositely inclined channels in its front face intersecting and crossing each other, a rigid transparent cover plate secured over the front face of said board and closing the fronts of said channels, and a valve mounted for rotation in said intersection about an axis disposed perpendicularly to the front face of said board, said valve having a passage extending diametrically therethrough, a portion of said valve projecting externally through said cover plate for manual engagement, whereby said valve may be rotated to selectively align said valve passage with either of said channels.

RICHARD L. BARNHART.

REFERENCES CITED

The following references are of record in the file of this patent:

UNITED STATES PATENTS

Number	Name	Date
2,011,266	Boynton	Aug. 13, 1935
2,086,327	Hameetman	July 6, 1937
2,102,807	Perks	Dec. 21, 1937