June 30, 1942. F. J. SLEZAK 2,288,553

UNDERGARMENT

Filed March 9, 1940

FIG. 1

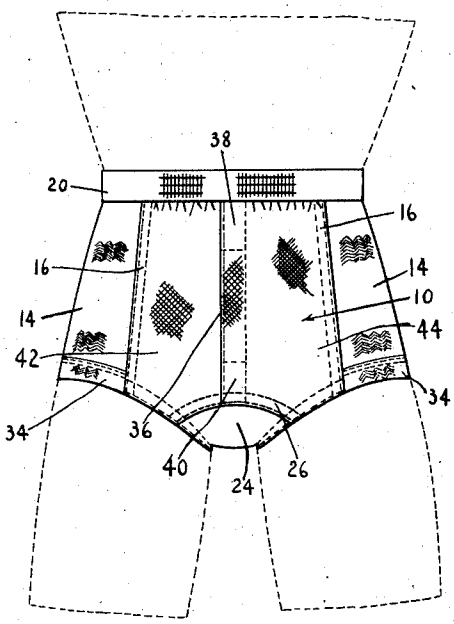

FIG. 5

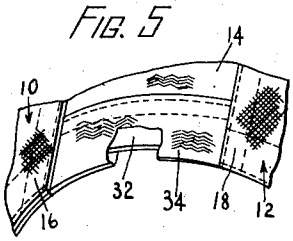

FIG. 3

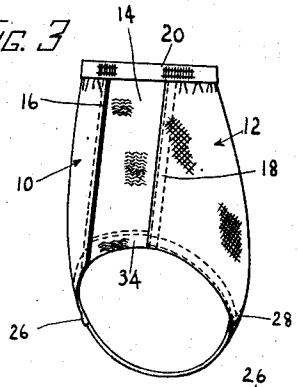

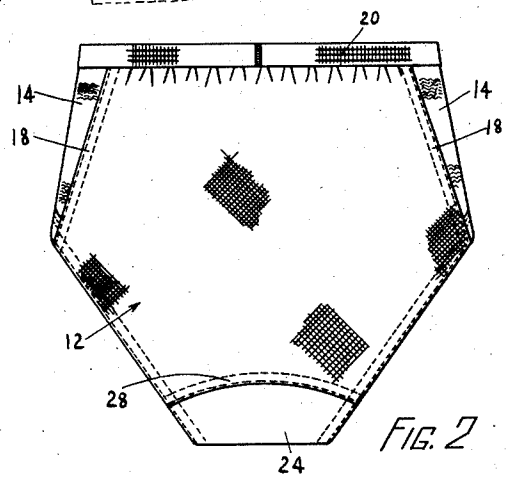

FIG. 2

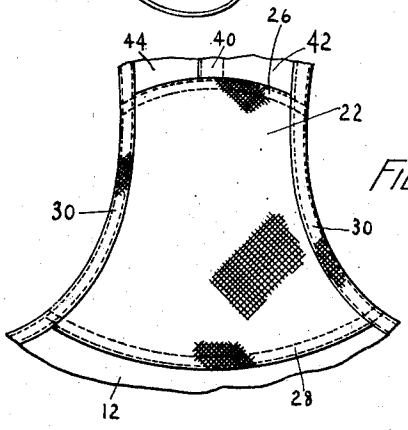

FIG. 4

Inventor

FRANK J. SLEZAK

By Edwin Lewis

Attorney

Patented June 30, 1942 2,288,553

UNITED STATES PATENT OFFICE

2,288,553

UNDERGARMENT

Frank J. Slezak, San Francisco, Calif.

Application March 9, 1940, Serial No. 323,127

3 Claims. (Cl. 2—226)

This invention relates to undergarments and more particularly to such garments for men and boys.

One of the objects of this invention is to provide an undergarment such as shorts made mainly of woven cloth and embodying a support at the crotch of the garment, the construction being such that the garment snugly fits the wearer and conforms to all body movements, while obviating upward creeping of the garment or other uncomfortable maladjustments thereof.

The garment embodying the present invention includes front and back portions of inextensible cloth such as woven material together with interposed side sections of relatively extensible cloth such as knit material secured to said front and back portions at both sides of the garment and designed to resiliently embrace the wearer's thighs while allowing free body movement. As the garment is preferably permanently closed at the waist, at which an elastic waist band is provided, said interposed side sections permit the garment to be readily put on and taken off, buttons or other separable fastening means being unnecessary. The leg openings of the garment are defined by the lower edges of said side sections, by lower edge portions of said front and back woven cloth portions of the garment, and by the side edges of the crotch part. The lower edges of the said side sections are provided with elastic tapes which cause the marginal edge portions of the garment at the leg openings to conform to the thighs encircled thereby. Also, said elastic tapes exert tension on the side edges of the crotch part which, as will hereinafter appear, is designed to act as a support, and exert a mild upward pull on said crotch part for improving the supporting action thereof and also for holding said crotch part in proper position and in relatively smooth condition. Another feature of the invention resides in utilizing in the front and back portions of the garment and in the crotch part thereof woven fabric such as broadcloth or other suitable woven material cut on the bias so that said portions are somewhat elastic although considerably less extensible than the side sections of the garment.

The above and other objects, features and advantages of the invention will appear from the following description considered in connection with the accompanying drawing which illustrates a preferred form of the invention.

In the drawing:

Fig. 1 is a front view of the garment as it appears when on the wearer;

Fig. 2 is a view of the back of the garment;

Fig. 3 is a side view of the garment, the parts being positioned to illustrate the garment as it appears when on the wearer;

Fig. 4 is an inner plan view, on a larger scale, of the crotch part;

Fig. 5 is a view on a larger scale illustrating part of the garment at the leg opening.

Referring now to the drawing in detail, the garment constructed in accordance with the preferred embodiment of the present invention comprises front and back portions 10 and 12, respectively, composed of inextensible fabric such as broadcloth or other suitable woven material. Preferably said portions 10 and 12 are cut on the bias so that they possess a small degree of elasticity vertically and circumferentially of the wearer. Side sections 14 composed of relatively extensible cloth such as rib-knit material are interposed between the front and back portions of the garment and are stitched thereto at both sides of the garment by double seams as indicated at 16 at the front of the garment and at 18 at the back of the garment. Said side sections 14 are arranged in the garment so that the wales of the knit material thereof extend longitudinally of the garment whereby said sections are extensible circumferentially of the garment and substantially inextensible longitudinally of the garment. A circumferentially elastic waist band 20 is stitched to the upper edges of the front and back portions and to the upper edges of said side sections completely therearound, the upper marginal edges of front and back portions 10 and 12 being gathered somewhat at the lines of juncture with said elastic band so that they can extend and contract with said band at the waist of the wearer.

The crotch part of the garment comprises inner and outer layers 22 and 24 of broadcloth or other suitable woven material preferably cut on the bias so that said crotch part is somewhat elastic. The upper marginal edge 26 of the crotch part is stitched to the lower marginal edge of the front portion 10 centrally of the latter and the rear marginal edge 28 of said crotch part is stitched to the lower marginal edge of back portion 12. The side edges 30 of the crotch part are disposed to define parts of the leg openings and define the latter in conjunction with lower marginal edge portions of front part 10, side sections 14 and back portion 12. The lower edge of each side section 14 is provided with an elastic tape 32. Each tape 32 is disposed within a folded extensible edging 34 of knit material and is stitched at its opposite ends at the seams 16 and 18 by which the opposite side edges of the side section 14 are secured to the front and back portions 10 and 12 respectively. It will be observed by reference to the drawing that the interposed side sections 14 of extensible material exert tension on the front and back portions 10 and 12 to hold the latter smoothly in position and that the elastic tapes 32 exert a mild upward pull on the crotch

part 24 to improve the supporting action of said part and to hold the latter smoothly in place.

The front portion 10 of the garment is provided with a fly opening 36 and the vertically extending central portions 38 and 40 above and below said fly opening are stitched in position and reinforce the front central part of front portion 10 to prevent sagging of the crotch part 24. Preferably front portion 10 of the garment comprises two parts 42 and 44 overlapped at the front central line of the garment to form the fly construction and to provide the inextensible central portions 38 and 40.

While I have shown and described the preferred embodiment of the invention, it will be understood that certain changes in the details of construction and in the arrangement of parts may be made therein and will occur to skilled artisans. Therefore, I do not wish to be limited to the construction herein shown or described except as may be required by the scope of the appended claims.

Having thus described my invention, what I claim and desire to secure by Letters Patent is:

1. An undergarment of the class described comprising front and back portions of substantially inextensible woven cloth, interposed side sections of relatively extensible knit cloth stitched to said front and back portions at both sides of the garment, the wales of said knit material in said side sections extending longitudinally of the garment whereby said sections are substantially inextensible longitudinally of the garment but are elastic laterally thereof, and a crotch part of inextensible woven cloth extending from the front to the rear of the garment and stitched to the lower edges of said front and back portions and positioned in the garment so that it is located at the crotch of the wearer, when the garment is worn, whereby to constitute a support, the material of said front and back portions being bias-cut and arranged in the garment on the bias so that said portions are slightly elastic longitudinally and laterally of the wearer and substantially inextensible along oblique lines extending upwardly from said crotch part to the opposite side edges, respectively, of said front and back portions whereby said side sections and said front and back portions tension said crotch part laterally and upwardly.

2. An undergarment of the class described comprising front and back portions of substantially inextensible woven cloth, interposed side sections of relatively extensible knit cloth stitched to said front and back portions at both sides of the garment, the wales of said knit material in said side sections extending longitudinally of the garment whereby said sections are substantially inextensible longitudinally of the garment but are elastic laterally thereof, an elastic waist band secured to the upper edges of said front and back portions and to said side sections, and a crotch part of inextensible woven cloth extending from the front to the rear of the garment and stitched to the lower edges of said front and back portions and positioned in the garment so that it is located at the crotch of the wearer, when the garment is worn, whereby to constitute a support, the material of said front and back portions being bias-cut and arranged in the garment on the bias so that said portions are slightly elastic longitudinally and laterally of the wearer and substantially inextensible along oblique lines extending upwardly from said crotch part to the opposite side edges, respectively, of said front and back portions whereby said side sections and said front and back portions tension said crotch part laterally and upwardly, the leg openings of the garment being defined by the lower edges of said side sections by lower edge portions of said front and back portions and by the side edges of said crotch part, and elastic tapes secured at the lower edges of said side sections to hold said leg-opening defining portions in snug engagement with the wearer's thigh and to tension the crotch part laterally and upwardly for providing a smooth support at the crotch of the garment, said front portion having central overlapping parts connected at the upper ends thereof to said band and at the lower ends thereof to the front of said crotch part to tension the latter upwardly, said central overlapping portions having a fly opening therebetween.

3. An undergarment of the class described comprising front and back portions of substantially inextensible woven cloth, interposed side sections of relatively extensible knit cloth stitched to said front and back portions at both sides of the garment, the wales of said knit material in said side sections extending longitudinally of the garment whereby said sections are substantially inextensible longitudinally of the garment but are elastic laterally thereof, a waist band secured to the upper edges of said front and back portions and to said side sections, and a crotch part of inextensible woven cloth extending from the front to the rear of the garment and stitched to the lower edges of said front and back portions and positioned in the garment so that it is located at the crotch of the wearer, when the garment is worn, whereby to constitute a support, the material of said front and back portions and of said crotch part being bias-cut and arranged in the garment on the bias so that said portions are slightly elastic longitudinally and laterally of the wearer and substantially inextensible along oblique lines extending upwardly from said crotch part to the opposite side edges, respectively, of said front and back portions whereby said side sections and said front and back portions tension said crotch part laterally and upwardly, the leg openings of the garment being defined by the lower edges of said side sections, by lower edge portions of said front and back portions and by the side edges of said crotch part, the material of said crotch part being bias-cut and arranged in said part so that the latter is substantially inextensible along lines extending obliquely between the opposite side edges of said crotch part, and elastic tapes secured at the lower edges of said side sections to hold said leg-opening defining portions in snug engagement with the wearer's thighs and to tension the crotch part laterally and upwardly for providing a smooth support at the crotch of the garment, said front portion having central overlapping parts connected at the upper ends thereof to said band and at the lower ends thereof to the front of said crotch part to tension the latter upwardly, said central overlapping portions having a fly opening therebetween.

FRANK J. SLEZAK.