H. STOMMEL.

DOUBLE DIAPHRAGM PUMP.

APPLICATION FILED SEPT. 3, 1918.

1,321,159.

Patented Nov. 11, 1919.

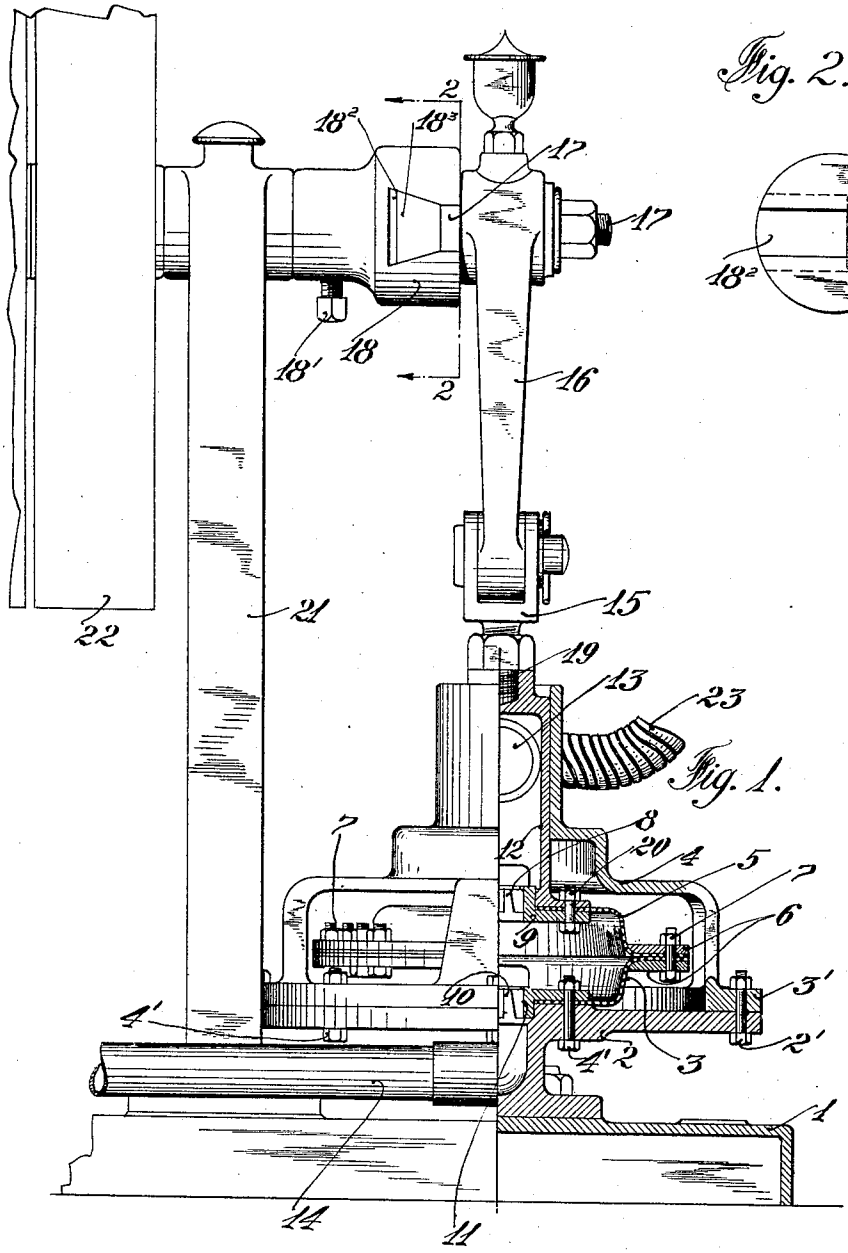

Fig. 1.

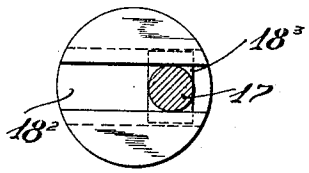

Fig. 2.

Inventor

Hugo Stommel

By his Attorney

James H. Griffin

UNITED STATES PATENT OFFICE.

HUGO STOMMEL, OF ELBERON, NEW JERSEY.

DOUBLE-DIAPHRAGM PUMP.

1,321,159. Specification of Letters Patent. Patented Nov. 11, 1919.

Application filed September 3, 1918. Serial No. 252,287.

To all whom it may concern:

Be it known that I, HUGO STOMMEL, a citizen of the United States, residing in Elberon, county of Monmouth, and State of New Jersey, have invented a certain new and useful Double-Diaphragm Pump, of which the following is a specification.

This invention is a double diaphragm pump designed, more particularly, for pumping emulsions of ground clay, sand, feldspar and similar mixtures used in the manufacture of tile and pottery. Pumps of this general, functional type, are now used for pumping mixtures of the character specified to filter presses, etc., and, naturally, the operating parts are subjected to great strain. Piston pumps have been quite commonly used for this purpose, but the material pumped exerts such an abrasive action on the piston, valves, etc., that these parts have to be renewed frequently at very considerable trouble, delay and expense.

The present invention overcomes the enumerated disadvantages and others in that it embodies a structure which dispenses with pistons or sensitive valves, and a structure wherein the strains are so distributed that a pump of pronounced efficiency and durability results.

Features of the invention other than those referred to, will be clear from the hereinafter detailed description.

Figure 1 is a front elevation, partly in section, of the pump and its associated parts;

Fig. 2 is a sectional elevation on line 2—2 of Fig. 1, looking in the direction of the arrows applied to said line.

Referring to the drawings, 1 is a bed plate, 2 a support or housing for the lower diaphragm 3, and 4 a support or housing for the upper diaphragm 5. The upper housing 4 terminates at its lower end in an annulus 3′, whereby it is secured to the periphery of housing 2 through the medium of bolts 2′. The peripheries of the diaphragms are brought into lapping relation and are secured between annuli 6, 6 by means of bolts 7. Coöperating with the diaphragms are two valves, the upper valve 8, seating on valve seat 9, and a lower valve 10, seating on valve seat 11, the lower valve forming the inlet or suction valve of the pump and the upper valve forming the exit or discharge valve from the pump. It will be noted that valve seat 11 is so constructed that it may be bolted to the upper face of housing 2 with the inner edge of diaphragm 3 clamped between the valve seat and housing through the medium of bolts 4′. Discharge valve 8 is provided with a reciprocating housing, 12, which, as will hereafter appear operates as a piston, has a discharge outlet 13, the intake to the pump being shown at 14. A cross head is shown at 15 with which is associated a connecting rod 16, the upper end of which is journaled on extension bolt or rod 17, and driven thereby.

Associated with the driving shaft is an eccentric head or disk 18, with which bolt 17 coöperates in a manner to be described. Disk 18, secured to the driving shaft by set screw 18′, is provided with a tapered slot or groove 18^2, in which the correspondingly shaped end 18^3 of bolt 17 is slidable and therefore eccentrically adjustable with relation to the driving shaft, thereby providing a means for regulating the throw or travel of connecting rod 16, cross head 15 and reciprocating housing or piston 12. As clearly appears in Fig. 1, the reciprocating housing 12 is secured, at its upper end, to crank 15 through the medium of screw 19, and is affixed, at its lower end, to valve seat 9 and upper diaphragm 5 by means of bolts 20. A standard, for supporting the driving shaft is shown at 21, and the driving pulley at 22.

From the foregoing description the operation of the pump will be readily understood, but it may be briefly described as follows.

When the piston housing 12 moves upward, due to the upward travel of connecting rod 16, the upper diaphragm 5 is slightly raised, thereby producing a partial vacuum or suction between the diaphragms with the result that the inlet valve 10 is opened and fluid caused to enter the inlet port through pipe 14. The suction produced between the diaphragms tends to keep the discharge valve 8 tightly to its seat, but when the reverse movement of the piston 12 occurs, *i. e.*, upon the downward travel of cross head 15, the lower valve 10 is closed and the upper valve 8 opens, thereby forcing the fluid through the discharge outlet 13.

It will be understood that slight changes may be made in the structure described,

such as the substitution of equivalents, and that parts of the invention may be utilized without necessarily employing all the features described, without departing from the spirit or substance of the invention, the scope of which is commensurate with the appended claims.

Having thus fully described the invention, what I claim as new, and desire to secure by Letters Patent, is:

1. A pump of the class described embodying a stationary housing comprising upper and lower portions, the upper of which is provided with a guide-way, a reciprocating housing member mounted for reciprocating movement in the guide-way of the upper housing member, means for actuating said reciprocating housing member, a pair of opposed diaphragms mounted within the stationary housing and secured together at their outer peripheries to form an intermediate pressure chamber, inlet and outlet valves governing the entrance of fluid into, and the exit of fluid from the chamber between the diaphragms, a valve seat for each of said valves, means for simultaneously securing the inlet valve seat and one diaphragm to the lower stationary housing member, and means for simultaneously securing the outlet valve seat and the other diaphragm to the reciprocating housing member, and inlet and outlet ducts communicating with the chamber between the diaphragms.

2. A pump of the class described embodying a stationary housing comprising upper and lower portions, the upper of which is provided with a guide-way, a reciprocating housing member mounted for reciprocating movement in the guide-way of the upper housing member, means for actuating said reciprocating housing member, a pair of opposed diaphragms mounted within the stationary housing and secured together at their outer peripheries to form an intermediate pressure chamber, inlet and outlet valves governing the entrance of fluid into, and the exit of fluid from the chamber between the diaphragms, a valve seat for each of said valves, means for simultaneously securing the inlet valve seat and one diaphragm to the lower stationary housing member, and means for simultaneously securing the outlet valve seat and the other diaphragm to the reciprocating housing member, and inlet and outlet ducts communicating with the chamber between the diaphragms, in combination with means for varying the extent of travel of the reciprocating housing member to regulate the capacity of the pump.

In testimony whereof, I have signed my name to this specification.

HUGO STOMMEL.

Copies of this patent may be obtained for five cents each, by addressing the "Commissioner of Patents, Washington, D. C."