PCT WORLD INTELLECTUAL PROPERTY ORGANIZATION
International Bureau

INTERNATIONAL APPLICATION PUBLISHED UNDER THE PATENT COOPERATION TREATY (PCT)

(51) International Patent Classification 7 : A63F 13/10, 13/12

A1

(11) International Publication Number: **WO 00/25878**

(43) International Publication Date: 11 May 2000 (11.05.00)

(21) International Application Number: PCT/JP99/06019

(22) International Filing Date: 29 October 1999 (29.10.99)

(30) Priority Data:
10/308879 29 October 1998 (29.10.98) JP

(71) Applicant: SONY COMPUTER ENTERTAINMENT INC. [JP/JP]; 1-1, Akasaka 7-chome, Minato-ku, Tokyo 107-0052 (JP).

(72) Inventors: HIRAMATSU, Shuji; Sony Computer Entertainment Inc., 1-1, Akasaka 7-chome, Minato-ku, Tokyo 107-0052 (JP). HIRAMATSU, Ami; Contrail Inc., 8th, Sumitomonakanosakaue Building, 38-1, Chuo 1-chome, Nakano-ku, Tokyo 164-0011 (JP).

(74) Agent: YAMAMOTO, Toshitake; 301, Ogikubo Sunny Garden, 28-9, Ogikubo 4-chome, Suginami-ku, Tokyo 167-0051 (JP).

(81) Designated States: AU, BR, CA, CN, KR, MX, NZ, RU, SG, European patent (AT, BE, CH, CY, DE, DK, ES, FI, FR, GB, GR, IE, IT, LU, MC, NL, PT, SE).

Published
With international search report.
Before the expiration of the time limit for amending the claims and to be republished in the event of the receipt of amendments.

(54) Title: INFORMATION PROCESSING DEVICE, INFORMATION PROCESSING METHOD, AND RECORDING MEDIUM

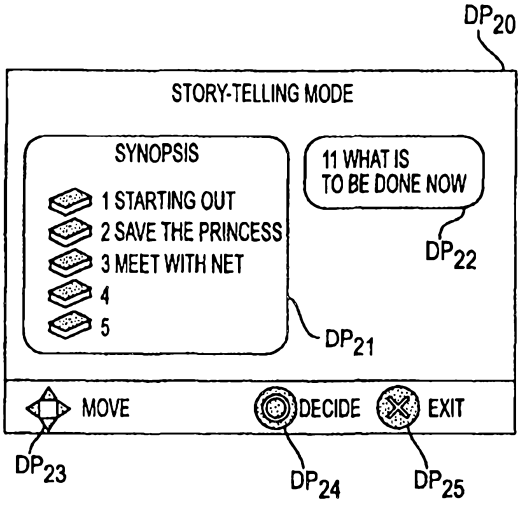

(57) Abstract

It is an object of the present invention for a player to easily understand contents of a story he has played, upon resumption of a game. A video game device (1) of this invention includes a control system (30), which performs data processing in accordance with a video game program, a graphic generation system (40) and a monitor (45) which display images. A memory means (80) stores synopsis data, latest event data, etc. showing the results of the state of progress of the story up until data save processing is done. Also, synopsis-display information, etc. corresponding to the state of progress of the story is recorded on a recording medium. The video game device (1) displays on its monitor (45) by means of the control system (30), the synopsis-display information just before the data save processing that corresponds to the synopsis data is done.

FOR THE PURPOSES OF INFORMATION ONLY

Codes used to identify States party to the PCT on the front pages of pamphlets publishing international applications under the PCT.

AL	Albania	**ES**	Spain	**LS**	Lesotho	**SI**	Slovenia
AM	Armenia	**FI**	Finland	**LT**	Lithuania	**SK**	Slovakia
AT	Austria	**FR**	France	**LU**	Luxembourg	**SN**	Senegal
AU	Australia	**GA**	Gabon	**LV**	Latvia	**SZ**	Swaziland
AZ	Azerbaijan	**GB**	United Kingdom	**MC**	Monaco	**TD**	Chad
BA	Bosnia and Herzegovina	**GE**	Georgia	**MD**	Republic of Moldova	**TG**	Togo
BB	Barbados	**GH**	Ghana	**MG**	Madagascar	**TJ**	Tajikistan
BE	Belgium	**GN**	Guinea	**MK**	The former Yugoslav Republic of Macedonia	**TM**	Turkmenistan
BF	Burkina Faso	**GR**	Greece			**TR**	Turkey
BG	Bulgaria	**HU**	Hungary	**ML**	Mali	**TT**	Trinidad and Tobago
BJ	Benin	**IE**	Ireland	**MN**	Mongolia	**UA**	Ukraine
BR	Brazil	**IL**	Israel	**MR**	Mauritania	**UG**	Uganda
BY	Belarus	**IS**	Iceland	**MW**	Malawi	**US**	United States of America
CA	Canada	**IT**	Italy	**MX**	Mexico	**UZ**	Uzbekistan
CF	Central African Republic	**JP**	Japan	**NE**	Niger	**VN**	Viet Nam
CG	Congo	**KE**	Kenya	**NL**	Netherlands	**YU**	Yugoslavia
CH	Switzerland	**KG**	Kyrgyzstan	**NO**	Norway	**ZW**	Zimbabwe
CI	Côte d'Ivoire	**KP**	Democratic People's Republic of Korea	**NZ**	New Zealand		
CM	Cameroon			**PL**	Poland		
CN	China	**KR**	Republic of Korea	**PT**	Portugal		
CU	Cuba	**KZ**	Kazakstan	**RO**	Romania		
CZ	Czech Republic	**LC**	Saint Lucia	**RU**	Russian Federation		
DE	Germany	**LI**	Liechtenstein	**SD**	Sudan		
DK	Denmark	**LK**	Sri Lanka	**SE**	Sweden		
EE	Estonia	**LR**	Liberia	**SG**	Singapore		

DESCRIPTION

INFORMATION PROCESSING DEVICE, INFORMATION PROCESSING METHOD, AND RECORDING MEDIUM

BACKGROUND OF THE INVENTION

Field of the Invention

This invention relates to an information processing device and information processing method that perform data processing according to a program, and a recording medium on which a program is stored to cause data processing to be performed on an information processing device. More specifically, the present invention relates to an information processing device and information processing method that perform data processing according to a video game program that consists of multiple events, and a recording medium on which a video game program that consists of multiple events is stored.

Description of the Prior Art

The improved data processing capacity of video game machines recently has made the playing of video games more realistic. Among the larger video games are so-called role-playing games (RPGs), in which, for example, one story is completed by meeting the conditions for multiple events. A role-playing game is a video game in which the player works toward an assigned goal while playing a fixed role in a virtual world and experiencing many simulated adventures.

Meanwhile, the increasing capacity CD-ROMs and other recording media on which the content of video games is stored as video game programs has made possible the trend toward ever-longer playing time required for a player to play a role-playing game or other video game.

The longer playing time for video games means that a player can now take several days to enjoy a single game. Conquering a game that takes so long increases the sense of achievement when the end of the game is reached.

However, a player seldom has the time to play such a game for days at a time without letup. For example, a common approach is for a player to store the intermediate state of the game progress he has reached when he leaves for school or work, then, upon returning home, he again returns to the game world and resumes playing. For example, the results of the state of progress of the game are recorded on a memory card, etc.

For example, the game may be resumed later in the same day, or sometimes it may be resumed again in a week.

The longer playing time described above makes it difficult to continue to follow the content of the story over a long period of time; for example, when resuming the game after a week's absence away from it, one may forget the content of the progress of the game. In this way, resuming the game may lose its meaning for the player if he forgets how far the game has progressed, and sometimes the data that shows the state of progress of the game thus far gets destroyed.

Thus in a video game of a wide scope it is important to enable the player to continue to understand the storyline over a long period of time.

SUMMARY OF THE INVENTION

It is an object of this invention, which was devised in consideration of the above situation, to provide an information processing device, an information processing method, and a recording medium that make it easy for the player, upon resuming play, to follow the content of the story as it has been played thus far.

This and other objects of the present invention are attained by an information processing device including a data processing means that performs data processing according to a video game program, an image display means that displays an image, and a

storage means that stores information about the results of the state of progress and shows the results of the state of progress of the story until just before data save processing is performed. Also, information about the state of progress corresponding to the state of progress of the story is recorded on the recording medium on which the video game program that the information processing device executes is recorded. The information processing device controls, by a data processing means, how to display on an image display means the information on the state of progress just before data save processing is done and corresponding to the information on the results of the state of progress.

Upon resumption of the video game, etc., the information processing device, which has such a configuration, displays on the image display means the information on the state of progress just before the data save processing is done and that corresponds to the information on the results of the state of progress.

Also, to solve the above described problems, an information processing method of the present invention comprises a storage step that stores, on a storage means of an information processing device, information about the results of the state of progress that shows the results of the state of progress of the story just before the information processing device performs data save processing; and a display step that displays information on the state of progress corresponding to the state of progress of the story just before the data save processing that corresponds to the information about the results of the state of progress, which is information that is recorded on the recording medium.

Upon resumption of the video game, etc., such information processing method displays the information about the state of progress just before the data save processing is done that corresponds to the information on the results of the state of progress.

Yet another object of the present invention is attained by a recording medium on which a program is recorded that executes on the information processing device a storage step that stores, on the storage means of the information processing device, information about the results of the state of progress that shows the results of the state of progress of

the story just before the information processing device performs data save processing, and a display step that displays information about the state of progress corresponding to the state of progress of the story just before the data save processing that corresponds to the information about the results of the state of progress, which is information that is recorded on the recording medium.

With such a recording medium, upon resumption of the video game, etc., the information processing device that executes data processing according to a program recorded on this recording medium displays the information about the state of progress just before the data save processing is done that corresponds to the information on the results of the state of progress.

BRIEF DESCRIPTION OF THE DRAWINGS

Figure 1 is a block diagram showing configuration of a video game device according to an embodiment of the present invention;

Figure 2 is a diagram showing the configuration of a RAM of the video game device;

Figure 3 is a diagram showing a table that associates synopsis information with the addresses of the synopsis information for display that is stored on the recording medium;

Figure 4 is a flowchart showing the series of processing by which each item of data of the game stored in the RAM is stored in a memory unit;

Figure 5 is a flowchart showing the series of processings by which synopsis information for display and event information for display are displayed on a monitor of the video game device;

Figure 6 is a diagram showing the series of processings by which the story-telling mode is executed;

Figure 7 is a diagram showing a display example of a main menu screen;

Figure 8 is a diagram showing a first display example of the story-telling menu;

Figure 9 is a diagram showing a second display example of the story-telling menu;

Figure 10 is a diagram showing a display example of the synopsis information screen;

Figure 11 is a diagram of a display example of the information screen indicating what is to be done now;

Figure 12 is a plan view of an entertainment system that consists of a portable electronic device and a video game device;

Figure 13 is a perspective view of the entertainment system;

Figures 14A through 14C schematically show the portable electronic device;

Figure 15 is a block diagram of the video game device; and

Figures 16A-16B are a block diagram of the portable electronic device.

DETAILED DESCRIPTION OF THE PREFERRED EMBODIMENTS

An embodiment of the present invention will be described in detail with reference to the accompanying drawings. In this embodiment, a video game device is proposed herein in which, with the information processing device of this invention, a game is played in which a character (player character) is made to act according to the player's wishes in a virtual world according to a video game program (application program) stored on the recording medium of the present invention.

The video game device allows a story consisting of multiple events to be played out by execution of a video game program recorded on a recording medium. For example, the video game may be a role-playing game in which the player becomes the hero or other main character in the story as it is played out. An event may be, for example, a special occurrence in the story in which a player character meets someone or acquires something.

Referring now to Figure 1, the video game device 1 includes a control system 30, graphic generation system 40, a sound generation system 50, an application program reproducing system 60, an input operation system 70, and a memory unit or means 80.

In the video game device 1, control system 30, character generation system 40, sound generation system 50, application program reproducing system 60, and input operation system 70 are connected to a system bus (BUS) 20. Video game device 1 controls each part by the control system 30 via the system bus 20.

The memory means 80 is a data storage means that is constructed so as to be detachable with respect to the video game device 1. For example, memory means 80 may be a so-called memory card for storing the result data of the video game or a portable information terminal (personal digital assistant, or PDA). For example, if the memory means 80 is a portable information terminal, the game results are stored in the storage means that the portable information terminal has.

The video game device 1, which is constructed in this way, has control system 30, which is a data processing means that performs data processing in accordance with a video game program, graphic generation system 40 and a monitor 45, which are image display means that display images, and memory means 80, which is a storage means in which information about the results of the state of progress is stored showing the results of the state of progress of the story up until data save processing is done.

Information on the state of progress corresponding to the state of progress of the story is stored on the recording medium of memory means 80, and by means of control system 30, the video game device 1 displays on monitor 45 information about the state of progress just before data save processing is done corresponding to this information on the state of progress.

Here, information on the state of progress consists of information on the course of progress showing the course of progress of the story until just before data save processing is done, and event information at the time of save processing showing the events just

before data save processing is done. In this example, data save processing in a video game means the processing by which data is saved when a video game termination operation is done, thereby preserving the results of the state of progress of the game.

Thus, information on the course of progress showing the course of progress of the story until just before data save processing is done consists of, for example, information showing the story as developed by the player until game termination processing is done. Event information at the time of save processing showing the events just before data save processing is done consists of, for example, information showing the events executed by the player just before game termination processing is done. That is, the information about the course of progress is set to data that shows a synopsis of the story up until just before game termination processing, and the event information at the time of save processing is set to data that shows information about the events performed most recently before game termination processing. In the following, information about the course of progress is referred to as synopsis data, and event information at the time of save processing is referred to as latest event data.

Also, event clearance information indicating the clearing of events is stored in memory means 80. Event clearance data means data indicating the clearance state of events at the time of video game termination operation; that is, it consists of data that indicates events that have been cleared by the player by the time of game termination operation. Event clearance data will be explained in greater detail later.

The data save processing is done when the game is terminated, etc., and thereby the video game device 1 preserves in memory means 80 the data that is stored in a RAM 33 of control system 30.

In the following, the constituent parts of video game device 1 will be described.

The graphic generation system 40 includes at least a graphic processing unit (GPU) 42, which draws images in accordance with drawing instructions from a CPU 31, and a frame buffer 43, in which is stored the image drawn by the GPU 42. The image

generated by this graphic generation system 40 is displayed on monitor 45. Here, the graphic generation system 40 and monitor 45 consist of an image display means on monitor 45.

The sound generation system 50 includes a sound processing unit (SPU) 51, which generates music and sound effects based on the instructions of a CPU 31, a sound buffer 52, in which are stored music and sound effects generated by an SPU 51, and speaker 53, which outputs (emanates) the music and sound effects generated by SPU 51.

The application program reproducing system 60 has a recording medium. Application program reproducing system 60 is constructed so that the recording medium is detachable. The recording medium may be, for example, a CD-ROM or other optical disk.

Recorded in an application program is, for example, a program that includes a role-playing program, that is, a program for allowing the player to perform the actions of a player character at his will in a virtual world. For example, a program by which the game is played while varying the actions and story in response to events that are encountered (events that are generated) by having a character walk through a forest, plain, or town is stored on the recording medium as an application program.

Recorded on this recording medium is synopsis information about the course of progress showing an outline of the content of the course of progress of the story.

The synopsis information on the course of progress that is recorded on the recording medium means, for example, synopsis information that consists of an outline of the development of the story. What is recorded are what-to-do-now information, which tells the player who resumes the game what to do now, and immediately preceding event information, which indicates the event before the game is terminated the previous time. This synopsis information, what-to-do-now information, and immediately preceding event information recorded on the recording medium are information that is read into RAM 33, etc. based on the data generated by the development of the story thus far. The

synopsis information, what-to-do-now information, and immediately preceding event information are described in detail later.

The input operation system 70 is an input means by which the player inputs instructions; it consists of a set of operation levers and pushbuttons. For example, input operation system 70 may be what is called a controller in the field concerning video game device 1. The parts of video game device 1 are controlled by operation of this controller by the player.

For example, when video game device 1 is activated, the controller is operated by the player, and the video game device 1 starts devices in correspondence with this operation. When activated, video game device 1 reads an application program from application program reproducing system 60 via system bus 20 by CPU 31 and stores it into RAM 33.

When the game is terminated, the video game device 1 performs data save processing in accordance with the operation of the controller by the player; for example, data recording processing to memory means 80 is done, and the power to the main unit is turned OFF.

Memory means 80 is a recording means for recording various data, such as game results. When the game is terminated, what is recorded in memory means 80 are, for example, the results of the game thus far. Here, the data that is recorded in memory means 80 as the game results are the synopsis data, event data, and latest event data.

The memory means 80 is made so as to be detachable from the main body of video game device 1. Being detachable from the main body, the memory means 80 may be freely carried around; for example, it may be mounted into another video game device. The memory means 80 is, for example, a memory card or portable information terminal.

The control system 30 has at least the central processing unit (CPU) 31 and RAM 33, which serves as its main memory. The control system 30 is constructed as a part that controls the parts that form the video game device 1.

Specifically, applications programs read in from the recording medium and data on the game results, etc. are stored in RAM 33.

For example, upon termination of the game, data on the game results written into RAM 33 is written into memory means 80. When the game is resumed, the data on the game results up to the previous time that is recorded in memory means 80 is read into RAM 33, and control system 30 performs processing in which the video game is begun based on the application program and the data on the game results up to the previous time.

The configuration of the memory regions of RAM 33 which is shown in Fig. 2 is as follows. As stated above, synopsis data, latest event data, and event clearance data are stored in RAM 33. Corresponding to this, RAM 33 contains a synopsis flag storage memory region 33a for storing the synopsis data that is information on the course of progress, an event flag storage memory region 33b for storing the event clearance information, and a latest event storage memory region 33c for storing the latest event data, which is the event information at the time of save processing.

Here, event clearance data means the data that indicates the clearing of events. For example, if a player causes a story to progress, as stated above, an event occurs, but the player will not necessarily cause an action that meets the requirements of the event. For example, this would include cases in which a weapon or other item must be found but he is unable to find it, or cases in which he must knock down an enemy but is unable to do so.

A case in which one is able to satisfy the conditions of an event is known as "clearing" the event, while not being able to satisfy the conditions of an event is referred to as not being able to "clear" the event. In this way, event clearance data consists of information that indicates whether one has been able to clear an event within the story. It is also counted as not clearing an event when for some reason one is unable to generate the event itself, even though, in the normal course of development of the story one would be able to cause the event to occur (such as, for example, encountering an occurrence).

Also provided in RAM 33 are a synopsis-display information storage region 33d and an event-display information storage region 33e. The synopsis-display information storage region 33d is the region in which is recorded synopsis information read in from the recording medium in accordance with the synopsis data. The event-display information storage region 33e is the region in which is recorded information on the immediately preceding event, read in from the recording medium in accordance with the latest event data and the event clearance data.

RAM 33 has memory regions for storing such various data. Needless to say, the regions for storing other data are also provided in the memory regions of RAM 33.

The memory means 80 has memory regions similar to those of this RAM 33, and in this way it stores and maintains the data generated until the game is terminated.

Next, the storage of the data corresponding to each memory region of RAM 33 will be described. As shown in Figure 2, synopsis flag storage memory region 33a consists of flags of the two bits "1" or "0" and stores synopsis data. Multiple flags indicating synopsis data (hereafter called synopsis flags) indicate the state of progress of the story so far; specifically, "1" indicates the position in the story to which the player has progressed, and "0" indicates a story to which the player has not progressed. For example, one can verify to what chapter and what section of the story the player has progressed by the synopsis flags expressed by these "1"s and "0"s. For example, in the example shown in Figure 2, the change from "1" to "0" from the 18th synopsis flag 33a18 to the 19th synopsis flag $33a_{19}$ indicates that the player terminated the game at the time in the story that corresponds to synopsis flag $33a_{18}$.

Similarly, the event flag storage memory region 33b consists of flags of the two bits "1" or "0", by which is stored event clearance data. Multiple flags indicating event clearance data (hereafter called event clearance flags) indicate whether the player has cleared events; specifically, "1" indicates an event that he has cleared in the course of the

story, and "0" indicates an event that he has not cleared in the course of the story. This makes it possible to confirm whether the player has cleared an event in the story.

Similarly, the latest event storage memory region 33c consists of flags of the two bits "1" or "0", by which is stored the latest event data. Multiple flags indicating the latest event data (hereafter called the latest event flags) indicate the latest event prior to game termination processing when said processing was done. The latest event generated by the player is indicated by the change of the latest event flag from "1" to "0"; for example, in this example, the change from "1" to "0" from the 25th latest event flag $33c_{25}$ to the 26th latest event flag $33c_{26}$ indicates that the last event the player performed before terminating the game was the event corresponding to latest event flag $33c_{25}$.

From the results indicated in the latest event storage memory region 33c and event flag storage memory region 33b one can tell, when a player proceeds through a story, whether a given event has been cleared and what the most recent event was when the game was terminated. For example, in this example event flag $33b_{27}$ is "1" and latest event flags up to $33c_{25}$ are "1", and one can know for sure that the player proceeded with the story until the event corresponding to event flag $33b_{27}$, and one can know that when the player terminated the game, the last event he encountered was the event that corresponds to latest event flag $33c_{25}$. For example, one could have a case in which the player proceeds with the story and for some reason returns to and tries to clear an event which he has been unable to clear, but fails to clear it and terminates the game.

Information to be displayed on monitor 45 is stored in the synopsis-display information storage region 33d and the event-display information storage region 33e. The information stored in synopsis-display information storage region 33d and event-display information storage region 33e consists of messages to the player, advice, etc.

Information stored in a synopsis-display information storage region 33d and event-display information storage region 33e, respectively, is the information that is read from and written into the recording medium corresponding to the data stored in the

aforesaid synopsis flag storage memory region 33a, event flag storage memory region 33b, and latest event storage memory region 33c.

Specifically, the synopsis-display information storage region 33d is the memory region in which is stored the synopsis-display information that is written in from the recording medium corresponding to the aforesaid synopsis data. Also, event-display information storage region 33e is the memory region in which is stored the event-display information that is written in from the recording medium corresponding to the aforesaid latest event data and event clearance data.

Synopsis-display information is the information that indicates a synopsis of the story up to the last time it was played and consists of, for example, picture information and text information.

The event-display information consists of information that indicates the state of the events cleared in the story the last time it was played, and information indicating the latest event of the story the last time it was played. Information that indicates the state of the events cleared in the story the last time it was played is guidance information that indicates, based on the event clearance data, what is to be done next, and it consists of, for example, information that indicates the location to which one should go to obtain an important item that one was unable to obtain in the game the last time it was played.

The synopsis information, what-to-do-now information, and immediately preceding event information that are shown in Table 1 are stored in the recording medium as display information, that is, as information such as messages to the player. The video game device 1 begins execution of the game after reading in all this information stored in the recording medium, based on the data in synopsis flag storage memory region 33a, event flag storage memory region 33b, and latest event storage memory region 33c.

With regard to the various information from the recording medium, to describe the case in which synopsis-display information is read in, the video game device 1 reads in the synopsis-display information on the recording medium based on a table, as shown for

example in Figure 3, in which 5-bit synopsis data is associated with the address of the synopsis-display information on the recording medium. That is, if, as in this example, the flags up to the 18th synopsis flag $33a_{18}$ are set to "1", the table shown in Figure 3 is referenced, and the synopsis-display information recorded at the address that corresponds to "01010" is read in. For event-display information, the video game device 1 performs by a similar method a read-in from the recording medium based on the event clearance data and the latest event data.

With regard to the synopsis data and latest event data, as shown in Figure 2, one is not limited to adopting the so-called flag group mode of data expression. The device of the invention may also store this data in synopsis flag storage memory region 33a and latest event storage memory region 33c directly in the form of 5-bit data.

The memory regions of RAM 33 are composed in this way. Memory means 80 has memory regions similar to those of RAM 33. Thus upon termination of the game, the data written into RAM 33 is recorded in the same form in memory means 80 as well, and upon resumption of the game, the data recorded in memory means 80 is read into RAM 33.

The parts of video game device 1 are put together as described above. Next, we describe the processing that video game device 1 performs upon game termination and upon game resumption.

Figure 4 shows the procedure for the processing upon the game termination, that is, the processing for saving data to memory means 80. As shown in Figure 4, the video game device 1 decides in step S1 whether it is a save point. If it is confirmed that it is a save point, video game device 1 proceeds to step S2, and if it is confirmed that it is not a save point, it terminates said save processing.

In step S2, the video game device 1 decides whether to save the game data. That is, it decides whether to save the various data recorded in RAM 33. Specifically, video game device 1 displays to the player, on monitor 45, representation indicating whether the

data shall be saved. If in step S2 it confirms that the data is to be saved, video game device 1 proceeds to step S3, and if it confirms that it is not to be saved, it terminates said save processing.

In step S3, the video game device 1 writes into memory means 80, which is an auxiliary recording medium, the data that is stored in synopsis flag storage memory region 33a, event flag storage memory region 33b, latest event storage memory region 33c, synopsis-display information storage region 33d, and event-display information storage region 33e. After the data save processing, video game device 1 carries out processing of completion of the data save in step S4 and in step S5 displays representation that the save has been completed.

In step S6, the video game device 1 decides whether a data save shall be done again, and either terminates said data save processing or returns to step S2 and again performs decision processing on whether a save shall be done. By this series of processings, video game device 1 writes into memory means 80 the various data stored in RAM 33 if an operation for preserving the data is carried out by the player.

In this way, the data that is written into memory means 80 is read in when the game is resumed.

Figure 5 shows the processing procedure for the condition when the game is resumed. The processing procedure required when the game is resumed that is shown in Figure 5 is the processing procedure in case that memory means 80 has no memory regions that correspond to synopsis-display information storage region 33d and event-display information storage region 33e, that is, that it holds only the synopsis data, event clearance data, and latest event data. That is, in this case, when the game is resumed, display information from the recording medium is read in based on the synopsis data, event clearance data, and latest event data that are read in from memory means 80. This is because it is not always necessary for memory means 80 to hold display information,

but, as stated below, if memory means 80 has a display means, its effect is also brought about by holding display information.

As shown in Figure 5, in step S11 video game device 1 checks the synopsis flags for the synopsis data that is read in from memory means 80 and is stored in synopsis flag storage memory region 33a. By making this synopsis flag check, video game device 1 confirms, for example, that the story has heretofore proceeded as far as chapter 7 section 1, where it was broken off, as shown in step S12. Then, in step S13, video game device 1 reads from the recording medium into synopsis-display information storage region 33d the information that corresponds to this synopsis flag, that is, the synopsis information up to and including chapter 7 section 1, for example, "the seal of the legend" of chapter 7, and displays this information on monitor 45.

Then, in step S14, video game device 1 checks the event flag for the event clearance data read in from memory means 80 and stored in event flag storage memory region 33b. That is, for example, it checks the event flag data for chapter 7 section 1. By this event flag check, in step S15, video game device 1 confirms, for example, that 25th event 25 has been cleared and that 26th event 26 has not been cleared. Based on the results of this event flag confirmation, the video game device 1 analyzes the event clearance status in step S16.

Based on the results of this analysis of the event clearance status, the video game device 1 reads in, from the recording medium, information on the event to be displayed. For example, if the 25th event is a conversation with old man A about where the key to the library is kept and the 26th event is finding the text of the curse on a secret library bookshelf, it is confirmed that "finding the text of the curse on a secret bookshelf" has not been cleared. In other words, for what the player should do now, one obtains as a result that the best way to act next is to "go to the library and check the bookshelves." As a result of such an analysis of the event status, video game device 1, as shown in step S17, reads in from the recording medium and displays on monitor 45 "You should go to the

library" as information on what to do now, and "Old man A says ..." as the immediately preceding event information. As the information on what to do now, it is also possible to check the uncleared event flags and take information on what to do concerning the most important event among them.

As described above, at game termination processing, the video game device 1 records various data in memory means 80, and when the game is resumed, it reads out from the recording medium display information based on the data recorded in memory means 80, and displays it on monitor 45.

The display information that is displayed on monitor 45 when the game is resumed will be now described with reference to Figs. 6-11.

Figure 6 shows the series of processings for selecting the information to be displayed on monitor 45. Figures 7 through 11 show display examples of information for display on monitor 45. Specifically, Figure 7 shows a display example of the main menu screen, Figures 8 and 9 show display examples of story-telling screens, Figure 10 shows a display example of synopsis information, and Figure 11 shows a display example of what-to-do-now information. They are described specifically in the following.

In step S21, video game device 1 performs display processing of the main menu screen. As shown in Figure 7, main menu screen DP_{10} consists of "NEW GAME" menu selection display DP_{11}, "LOAD GAME" menu selection display DP_{12}, "Option" menu selection display DP_{13}, "Story-telling mode" menu selection display DP_{14}, "Move" selection button display DP_{15} for moving the cursor on the screen, and "Decision" selection button display DP_{16} for confirming a menu selection. For example, by means of the selection buttons, the cursor is moved to "NEW GAME", "LOAD GAME", "Option", or "Story-telling mode", and a decision is made. Here, story-telling mode is the processing mode, as described above, in which the synopsis information, immediately preceding event information, and what-to-do-now information up to the preceding time are output to monitor 45.

In steps S22 and S23, video game device 1 judges the input operation, waits for story-telling mode to be selected, then moves on to the processing of the next step S24.

In step S24, video game device 1 performs display processing of the story-telling menu screen.

As shown in Figure 8, story-telling menu screen DP_{20} of example 1 consists of synopsis information menu selection display DP_{21}, which consists of multiple items, what-to-do-now information menu selection display DP_{22}, "Move" selection button display DP_{23} for moving the cursor on the screen, "Decision" selection button display DP_{24} for confirming a menu selection, and "EXIT" selection button display DP_{25} for exiting the screen. In synopsis information menu selection display DP_{21}, the items that can be selected are displayed like "1 Start out", "2 Save the princess", "3 Meet with Net ", "4 ...", ...

As shown in Figure 9, story-telling screen menu screen DP_{30} of example 2 has synopsis information menu selection display DP_{31}, which consists of multiple items and has the same display format as aforesaid story-telling menu screen DP_{20}, what-to-do-now information menu selection display DP_{32}, "Move" selection button display DP_{35} for moving the cursor on the screen, "Decision" selection button display DP_{36} for confirming a menu selection, and "EXIT" selection button display DP_{37} for exiting the screen, plus display menu display DP_{33} for lookup, and so-called cry-for-help menu selection display.

For story-telling mode, video game device 1 displays either story-telling menu screen DP_{20} or story-telling menu screen DP_{30}, and processing is done in accordance with the player's selection of "synopsis", "what to do now", etc. In the decision processing of step S25, video game device 1 confirms that some menu selection has been made, and proceeds to step S26.

In step S26, it is decided whether the selected menu item is "synopsis". If it is the "synopsis" selection, video game device 1 proceeds to step S27, and if it is not the "synopsis" selection, it proceeds to step S30.

In step S27, video game device 1 confirms that it is screen display of the synopsis information, and in the following step S28 it performs display processing of the synopsis information.

Figure 10 shows synopsis information screen DP_{40}, which is the display example of the synopsis information done if "1 Start out" is selected in Figure 8 or 9. The synopsis information screen DP_{40} consists of synopsis information consisting of "Starting out" selection item display DP_{41}, which is the selected item; picture information display DP_{42}, and text information display DP_{43}; "Next" selection button display DP_{44} for moving to the next screen; "Previous" selection button display DP_{45} for moving to the previous screen; and "EXIT" selection button display DP_{46} for exiting from the display of this synopsis information.

For example, video game device 1 displays, as text information display DP_{43}, a synopsis of the story thus far, saying, "The hero, who had heard a dream oracle, leaves his abode. On his journey, people of the village he stops suffer a terrible fate at the hands of a king who has been cast under an evil spell. The hero who had heard from the people of the village a tale of a king who long ago was dearly loved the people, listens to the tale of the village's oldest man, in order to break the evil spell...." The picture information display DP_{41} is, for example, a picture that corresponds to the synopsis information. The display of the synopsis information may be accompanied with sound.

In the following step S29, video game device 1 displays the synopsis information until the "EXIT" selection button display DP_{46} is selected, and by detecting that "EXIT" has been selected, it terminates screen display of the synopsis information. Video game device 1, which has terminated display of the synopsis information, returns to step S24 and once again displays the story-telling screen.

On the other hand, in step S30, when a selection button that is not "synopsis" has been selected, the video game device 1 decides whether the menu selection is "what to do

now." If "what to do now" has been selected, the video game device 1 proceeds to step S31, and if "what to do now" has not been selected, it proceeds to step S34.

In step S31, the video game device 1 confirms that it is a screen display of what-to-do-now information, and in the following step S32 it performs display processing of the what-to-do-now information. By the what-to-do-now menu selection, the video game device 1 displays both the what-to-do-now information and the immediately preceding event information.

As shown in Figure 11, the what-to-do-now information screen DP_{50}, which is a display example of what-to-do-now information, consists of what-to-do-now information text information display DP_{51}; text information display D_{52}, which consists of the immediately preceding event, etc.; "Next" selection button display DP_{53} for moving to the next screen; "Previous" selection button display DP_{54} for moving to the previous screen; and "EXIT" selection button display DP_{55} for exiting from the display of this synopsis information.

For example, video game device 1 displays multiple what-to-do-now information as what-to-do-now text information display DP_{51}, such as "Go to the mountain behind the village. Release the power stone....", “Before going to the mountain take a nap ...." Also, the video game device 1 displays, as immediately previous event text information display DP_{52}, the present conditions along with the immediately previous event. For example, it may display such information as "The Harrises, rejoice at meeting their younger brother again. The hero who obtained the key to the mountain from the younger brother now can finally climb the mountain. He is now staying in an inn at the foot of the mountain. Obtain the magic word “papayaraja” for releasing the power stone from the old man Kukuya. Woman of the village:” On the mountain the law is, 3 to the right, 5 to the left, 2 to the right.” Also, the display of the what-to-do-now information and latest event information may be accompanied by sound.

In the following step S33, video game device 1 displays the what-to-do-now information, etc. until the "EXIT" selection button display DP_{46} is selected, and upon detecting that "EXIT" has been selected, it terminates screen display of the what-to-do-now information, etc. Video game device 1, which has terminated screen display of the what-to-do-now information, returns to step S24 and again displays the story-telling menu screen. And in step S34, to which it proceeds if "what to do now" is not selected, that is, by a menu selection other than "synopsis" or "what to do now," video game device 1 decides whether EXIT is to be done; if EXIT is to be done, it returns to step S21 and again displays the main menu screen; if EXIT is not to be done, it returns to step S24 and displays the story-telling menu screen.

The display of display information on monitor 45 when the game is resumed is done as explained above with reference to Figures 6 through 11.

As described above, when the game is resumed, the video game device 1 displays information about the synopsis of the story, what to do now, and the immediately preceding event as the result of the state of progress of the game the last time it was played, thus allowing the player to remember the course of the story up to the last time, and to select, in a relatively short time, what should be done now. For example, even if the player has interrupted the game for a long time, he can easily apprise himself of the state of progress of the story up until the last time he played the game.

If memory means 80 is, for example, a portable information terminal that can be carried around, one can also confirm the content of the story with the video game device 1. In this case, the portable information terminal has a liquid crystal display or any other display means that makes it possible to confirm, before resumption of the game, with the portable information terminal the synopsis and what is to be done now, further preventing one from forgetting the story as it has unfolded thus far.

Furthermore, by including in the portable information terminal at least a liquid crystal display or other image display means, an input operation unit that is operated by the user, a storage means for storing game results, and a control means that controls these, it is possible to verify the game synopsis, etc. with a portable terminal that is relatively moderate costwise as well. In the above-described mode of implementation, the description referred to writing into memory means 80 the synopsis data, etc. stored in RAM 33 by game termination processing, but the implementation is not limited to this. For example, by having a construction whereby the player can do data save processing at an intermediate stage in the game, one may confirm the synopsis, etc. even in the middle of the game, without doing game termination processing.

Also, a means for providing information by story-telling as described above can be constituted as an even more intelligent user interface. For example, the story-telling function can be given a personality, and story-telling can be done not only when selected by the player, but actively by the system. Specifically, this happens as follows.

If the player hears of the secret of old man A's bookshelf in the story and spends a great deal of time without reaching the bookshelf event, something like

"Do you remember the words of the old man you met at the pub?"

"How about checking out his books?" is displayed. Or a cryptic hint such as

"It's written on a white field ..." could be given. Along with the display information, the sound could be output as well.

It becomes even more effective if the information is given as if one were an agent. This so-called agent function setting could be turned ON or OFF.

Next, a specific example of video game device 1 will be described with reference to Figures 12 through 16. Figures 12 through 16 are of an entertainment system which includes a video game device 301 and a portable electronic device 400. Here, the video game device 301 corresponds to the aforesaid video game device 1, and the portable electronic device 400 corresponds to memory means 80.

As shown in Figures 12 and 13, the entertainment system consists of video game device 301 and portable electronic device 400, which can be mounted on and detached from this video game device 301 and performs data communication with said video game device 301. In this entertainment system, the video game device 301 comprises the so-called base machine, while portable electronic device 400 comprises the so-called terminal machine. For example, in this entertainment system, video game device 301 is constituted as a means that executes application programs stored on a CD-ROM or other recording medium.

As shown in Figures 12 and 13, the video game device 301 is one for reading an application program stored on the recording medium and executing it in accordance with instructions from the player. For example, by game execution, it performs mainly progress of the game, display, and sound control.

A main unit 302 of the video game device 301 is housed in a roughly square-shaped housing and has in its middle a disk mounting unit 303 on which is mounted a CD-ROM or other optical disk that is a recording medium for supplying video game and other application programs, as well as a reset switch 304 for arbitrarily resetting the video game, a power switch 305, a disk operation switch 306 for operating the mounting of an optical disk, and two slots 307A and 307B.

Also, the video game device 301 may be constituted so that application programs are supplied via a communication circuit, not just supplied from a recording medium. For example, it may be constituted so that data can be received from a broadcast circuit or other communication circuit.

The portable electronic device 400 or controller 320 can be connected to slots 307A and 307B.

Controller 320 has first and second operation parts 321 and 322, left button 323L, right button 323R, a start button 324, a selection button 325, analog-operable operation parts 331 and 332, a model selection switch 333 by which one selects the operation mode

of these operation parts 331 and 332, and a display unit 334 for displaying the selected operation mode. Although not pictured, a vibration-causing mechanism is provided inside controller 320. This vibration-causing mechanism causes controller 320 to vibrate in accordance with, for example, the progress of the video game. This controller 320 is electrically connected to slot 307B of main unit 302 by a connection part 326.

For example, by connecting two controllers 320 to slots 307A and 307B, two players can share this entertainment system; that is, for example, they can play a competitive game against each other. Slots 307A and 307B are not limited to two systems like this.

As shown in Figures 14(A) through (C), the portable electronic device 400 has a housing 401, and is equipped with an operation unit 420 for the input of various information, a display unit 430, which consists of a liquid crystal display (LCD), etc., and a window unit 440 for performing wireless communication by a wireless communication means, such as by infrared rays.

Housed inside housing 401, which consists of upper shell 401a and lower shell 401b, is a substrate on which memory elements, etc are mounted. The housing 401 is shaped so that it can be inserted into slots 307A and 307B of main unit 302 of the video game device 301.

The window unit 440 is provided at the other end of housing 401, which is formed in a roughly semicircular shape. Display unit 430 takes up about half the area of upper shell 401a that constitutes housing 401, and is positioned near window unit 440.

The operation unit 420, which has one or more operation buttons 421, 422 for performing event input and making various selections, etc., is formed in upper shell 401a in the same way as window unit 440, lies on the opposite side of the window unit 440, and take up about half of its area. The operation unit 420 is constituted on top of cover 410, which is supported rotatably with respect to housing 401. Here, operation buttons 421, 422 are arranged from the upper surface side to the lower surface side of the cover

410 and pierce this cover 410. The operation buttons 421, 422 are made so that they can move in or out with respect to the upper surface of cover 410 and are supported by said cover 410.

The portable electronic device 400 has a substrate that is inside housing 401 and is positioned corresponding to the arrangement position of cover 410, and it also has switch pressing units on this substrate. The switch pressing units are provided in positions corresponding to the positions of operation buttons 421, 422, in the state with cover 410 closed. Thus when operation buttons 421, 422 are pressed, the switch pressing unit presses a pressure switch, such as a diaphragm switch.

As shown in Figure 13, the portable electronic device 400, in which operation unit 420 is thus formed in cover 410, is mounted into main unit 302 of video game device 301 with its cover 410 open.

The appearance of video game device 301 and portable electronic device 400 is shown in Figures 12 through 14 as shown above. Figures 15 and 16 show the composition of the circuitry of video game device 301 and portable electronic device 400.

As shown in Figure 15, the video game device 301 includes a control system 350, which has a central processing unit (CPU) 351 and its peripheral devices, etc.; graphic system 360, which consists of a graphic processing unit (GPU) 362, which draws to a frame buffer 363, etc.; a sound system 370, which consists of a sound processing unit (SPU), etc. that produces musical tones and sound effects; an optical disk controller 380, which controls the optical disk on which application programs are recorded; a communication controller 390, which controls input and output of signals from controller 320, into which instructions from the player are input, and data from a memory card 500, on which the game settings, etc. are recorded, and from the portable electronic device 400, a bus 395, to which the above parts are connected, a parallel input-output interface (PIO) 396, which consists of an interface with other devices, serial input-output interface (SIO)

397 and a communication data processing unit 398, which performs broadcast data reception processing, etc.

Concerning the correspondence between video game device 1 and video game device 301 shown in this Figure 15, control system 30, graphic generation system 40, sound generation system 50, application recording system 60, and input operation system 70 of video game device 1 correspond, respectively, to control system 350, graphic system 360, sound system 370, optical disk controller 380, and communication control system 390 of the video game device 301.

That is, for example, control system 350 is a data processing means that performs data processing in accordance with the application program, graphic system 360 is an image display means that displays images, and main memory 353 of control system 350 is a recording means on which is recorded information on the results of the state of progress showing the results of the state of progress of the story until just before data save processing is done. The CPU 351 of control system 350 controls the display to the monitor by outputting from the video output the information on the state of progress just before the data save processing is done that corresponds to the information on the results of the state of progress.

Control system 350 includes the CPU 351, a peripheral device controller 352, which performs interrupt control and control of direct memory access (DMA) transfers, etc., a main memory 353, which consists of random access memory (RAM) and a read-only memory (ROM) 354.

The main memory 353 is constituted as a memory unit in which various data is stored. Stored in the main memory 353 are, for example, application programs, etc. read in from a recording medium. And as shown in the aforementioned Figure 2, main memory 353 has a synopsis flag storage memory region, an event flag storage memory region, a latest event storage memory region, a synopsis-display information storage

region, and an event-display information storage region, in which various data on the state of progress of the game, etc. is recorded.

ROM 354 is constituted as a memory means in which are stored various programs, including the so-called operating system, that manage main memory 353, graphic system 360, and sound system 370, etc.

CPU 351 controls all of this video game device 301 by executing the operating system stored in ROM 354.

When the power is turned on, the CPU 351 executes the operating system stored in ROM 354 according to the boot sequence and begins control of graphic system 360, sound system 370, etc. For example, when the operating system is executed, CPU 351 performs initialization of the entire video game device 301, including confirmation of operation, then controls optical disk controller 380 and executes the application program stored on the optical disk. By execution of this application program, CPU 351, in accordance with input from the player, controls graphic system 360, sound system 370, etc. and controls the display of images and the generation of sound effects and music.

The graphic system 360 includes a geometry transfer engine (GTE) 361, which does processing such as coordinate transformations, a GPU 362, which draws images in accordance with drawing instructions from CPU 351, a frame buffer 363, which stores images drawn by this GPU 362; and image decoder 364, which decodes image data compressed and encoded by orthogonal transformations such as discrete cosine transformations.

The GTE 361 has, for example, a parallel computation mechanism that executes multiple operations in parallel, and is able to perform at high speed such calculations as coordinate transforms, light source calculations, and matrix or vector calculations in response to calculation requests from CPU 351. Specifically, in the case of operations in which flat shading is done, in which, for example, a single triangle-shaped polygon is drawn with the same color, this GTE 361 is able to perform coordinate calculations for up

to about 1.5 million polygons per second, thereby making it possible, with this video game device 301, to both reduce the burden on CPU 351 and perform high-speed coordinate operations.

The GPU 362 draws polygons, etc. to frame buffer 363 in accordance with drawing commands from CPU 351. The GPU 362 is able to draw up to about 360,000 polygons per second.

The frame buffer 363, which consists of a so-called dual-port RAM, is able to simultaneously carry out drawing from GPU 362 or transfers from main memory 353, and reading for the sake of display. This frame buffer 363 has a capacity of, for example, 1 megabyte and can handle a matrix consisting of 1024 pixels horizontally and 512 pixels vertically, each pixel being 16 bits.

The frame buffer 363 has, besides a display region that is output as video output, a CLUT region in which is stored a color look-up table (CLUT) that is referenced when GPU 362 draws polygons, etc., and a texture region in which is stored the texture that is coordinate-transformed and mapped into polygons, etc. drawn by GPU 362 when drawing is done. These CLUT and texture regions dynamically change as the display region changes, etc.

The image decoder 364 decodes the image data of still pictures or moving pictures stored in main memory 353 and stores the result into main memory 353, under control from CPU 351. The image data generated here can be used as background for images drawn by GPU 362, by storing it into frame buffer 363 via GPU 362.

The sound system 370 includes a SPU 371, which generates music and sound effects based upon instructions from CPU 351, a sound buffer 372, in which waveform data, etc. is stored by this SPU 371, and a speaker 373, which emanates the music and sound effects generated by SPU 371.

The SPU 371 has, for example, an ADPCM (adaptive differential PCM) decoding function that generates audio data in which 16-bit audio data is adaptively encoded by

ADPCM as 4-bit difference signals, a playback function that plays back sound effects, etc. by playing back the waveform data stored in sound buffer 372 and a modulation function that modulates and plays back the waveform data stored in sound buffer 372.

The sound system 370 can be used as a so-called sampling sound source, which generates music and sound effects based on waveform data stored in sound buffer 372 under instructions from CPU 351.

The optical disk controller 380 includes an optical disk device 381, which plays back the application programs and data, etc. stored on a CD-ROM or other optical disk, a decoder 382, which decodes programs and data, etc. that have been stored, for example, with an added error correction code (ECC) and a buffer 383, which speeds up the reading of data from the optical disk by temporarily storing data from optical disk device 381. A sub-CPU 384 is connected to decoder 382.

As audio data that is read by optical disk device 381 and recorded on optical disk, there is, besides the above-described ADPCM data, so-called PCM data, in which an analog/digital transformation is performed on audio signals. Here, as an example of ADPCM data, audio data in which the differences of 16-bit digital data are expressed in 4 bits and recorded is decoded by decoder 382, then it is supplied to SPU 371, then processing such as digital/analog transformation is carried out on it by SPU 371, then it is used for driving speaker 373. And as an example of PCM data, audio data recorded as 16-bit digital data is decoded by decoder 382 then is used for driving speaker 373.

The communication controller 390 includes a communication controller 391, which controls communication with CPU 351 via bus 395, a controller connection unit 309, to which is connected controller 320, which inputs instructions from the player and a communication controller 391, which performs communication control of memory card insertion units 308A and 308B shown in Figure 13, to which are connected memory card 500 and the portable electronic device 400 as auxiliary memory devices that store game settings data, etc.

The communication data processor 398 is constituted to have the function of performing reception processing of the information that is received by an antenna, etc.; specifically it is constituted to have a data demodulation function, etc.

With regard to portable electronic device 400, as shown in Figure 16(A), it includes a control unit means 441, a connector 442, an input unit 443, a display unit 444, a time function unit 445, a nonvolatile memory 446, a speaker 447, a wireless communication unit 448 and a wireless reception unit 449 as data transmission and reception means, a battery 450 and a battery terminal 451 and a diode 452, which constitute a power storage means.

Control unit 441 is constituted using, for example, a microprocessor (labeled as such in the diagram). The control unit 441 has inside it a program memory unit 441a, which is a program storage means.

Connector 442 is constituted as a connection means for connecting to a slot in another information device, etc. For example, connector 442 is constituted to have the data communication function of transmitting and receiving data with video game device 301.

The input unit 443 consists of operation buttons, etc. for operating a stored program.

The display unit 444 consists of a liquid crystal display (LCD), etc., which is a display means that displays various informations.

The time function unit 445 is constructed so as to display the time; for example, it displays the time on display unit 444.

The nonvolatile memory 446 is a data storage means for storing various data. The nonvolatile memory 446 has the same functions as aforesaid memory means 80; that is, it can store data on game results in the video game device 301.

For example, the nonvolatile memory 446 may use a semiconductor memory element, such as a flash memory, in which the stored state remains even if the power is turned off.

Because the portable electronic device 400 has a battery 450, one may use as nonvolatile memory 446 a static random access memory (SRAM), which allows data to be input and output at high speed.

Because it has battery 450, the portable electronic device 400 can operate independently even when detached from slots 307A and 307B of main unit 302 of video game device 301.

Battery 450 is, for example, a rechargeable secondary battery. With the portable electronic device 400 inserted into slots 307A and 307B of video game device 301, power is supplied to the battery 450 from video game device 301. In this case, the power source terminal 451 is connected to the connection terminal of battery 450 via diode 452 to prevent reverse current, and power is supplied when main unit 302 of video game device 301 is connected.

The wireless communication unit 448 is constituted as a part that performs data communication with other memory cards, etc., by infrared rays, etc.

Wireless reception unit 449 is a part that is constituted to have an antenna and demodulation circuit, etc.; that is, it is constituted as a part that receives various data transmitted by wireless broadcasting.

The speaker 447 is constituted as a sound generation means that emanates sound in accordance with a program, etc.

The above-described parts all are connected to the control unit 441 and operate under the control of control unit 441.

The control items of control unit 441 are shown in Figure 16(B). As shown in Figure 16(B), control unit 441 has a main unit connection interface to information devices, a memory interface for inputting and outputting data to memory, a display interface, an

operation input interface, an audio interface, a wireless communication interface, a time control, and a program download interface.

The entertainment system consists of above-described video game device 301 and portable electronic device 400.

Constituted as described above, the video game device 301 can execute games based on application programs recorded on an optical disk mounted on optical disk controller 380.

That is, with the video game device 301, the player can, as described above, execute a role-playing game and execute the game as the hero of the story. And when the game is terminated before it is finished, the state of progress of the story, etc. is recorded on memory card 500 or portable electronic device 400, and when the game is to be resumed, the game results from last time that are recorded on memory card 500 or portable electronic device 400 are read in, and the game is resumed.

Meanwhile, the portable electronic device 400 can download an application program or a program from video game device 301, store it in program memory part 441a in the control unit or microprocessor 441, and execute the application program.

As described above, portable electronic device 400 can also record the results of a game of video game device 301. In this way, one can play back, even on portable electronic device 400, the results of the story of the game thus far, including the synopsis-display information and the event-display information. In this case, a synopsis-display information storage region and an event-display information storage region are provided in nonvolatile memory 446, making it possible to confirm with portable electronic device 400 the synopsis and what is to be done now, etc. by the time when the player resumes the game on video game device 301.

The information processing device of this invention has a data processing means that performs data processing according to a video game program, an image display means that displays an image, and a storage means that stores information on the results

of the state of progress and shows the results of the state of progress of the story until just before the data save processing is performed. Also, information on the state of progress according to the state of progress of the story is recorded on the recording medium on which is recorded the video game program that the information processing device executes. And the information processing device controls, by a data processing means, how to display on an image display means the information on the state of progress just before data save processing is done corresponding to the information on the results of the state of progress.

Upon resumption of the video game, etc., the information processing device, which has such a composition, can display on the image display means the information on the state of progress just before the data save processing is done that corresponds to the information on the results of the state of progress; thus even if the game is interrupted, the player is able, upon its resumption, to more clearly confirm the story thus far.

Also, the information processing method of this invention has a storage step that stores, on the storage means of the information processing device, information on the results of the state of progress that shows the results of the state of progress of the story just before the information processing device performs data save processing; and a display step that displays information on the state of progress corresponding to the state of progress of the story just before the data save processing that corresponds to the information on the results of the state of progress, which is information that is recorded on the recording medium.

Thus even if the game is interrupted, the player is able, upon its resumption, to more clearly confirm the story thus far.

Also, on the recording medium of this device is recorded a program that executes on the information processing device a storage step that stores, on the storage means of the information processing device, information on the results of the state of progress that shows the results of the state of progress of the story just before the information

processing device performs data save processing, and a display step that displays information on the state of progress corresponding to the state of progress of the story just before the data save processing that corresponds to the information on the results of the state of progress, which is information that is recorded on the recording medium; thus upon resumption of the video game, etc., the information processing device that executes data processing according to a program recorded on this recording medium displays on the image display means the information on the state of progress just before the data save processing is done that corresponds to the information on the results of the state of progress.

Thus even if the game is interrupted, the player is able, upon its resumption, to more clearly confirm the story thus far.

CLAIMS

What is claimed is:

1. An information processing device that allows a story that consists of multiple events to be advanced, by execution of a video game program recorded on a recording medium, comprising:

a data processing means that performs data processing according to said video game program;

an image display means that displays an image; and

a storage means that stores information about results of the state of progress and shows the results of the state of progress of said story until just before data save processing is performed, wherein

information about the state of progress of according to the state of progress of said story is recorded on said recording medium, and wherein

said data processing means controls how to display on said image display means said information on the state of progress just before the data save processing that corresponds to said information on the results of the state of progress is executed.

2. The information processing device as described in claim 1, wherein said information on the results of the state of progress includes information on the course of progress showing the course of progress of said story until just before said data save processing is done, and event information at the time of said save processing showing said events just before said data save processing is done.

3. The information processing device as described in claim 2, wherein said storage means includes a first storage region in which is stored said information on the course of progress, and a second storage region in which is stored the event information at the time of said save processing,

information outlining the course of progress showing an outline of the content of the course of progress of said story is recorded on said recording medium, and

said data processing means displays on said image display means said information outlining the course of progress showing an outline of the course of progress of said story until just before data save processing is done, based on said information on the course of progress stored in said first storage region, and information on said event just before data save processing based on event information at the time of said save processing stored in said second storage region is executed.

4. The information processing device as described in claim 1, wherein said storage means includes a storage region in which is stored an event clearance information showing a clearing of said events, and

said data processing means displays, on said image display means, suggestion information that indicates what to do now, based on said event clearance information stored in said storage means.

5. The information processing device as described in claim 1, further comprising:

a detachable portable information terminal that is equipped with said storage means and an image display means that displays images, wherein

said portable information terminal displays on said image display means said information on the state of progress just before the data save processing is done that corresponds to said information on the results of the state of progress.

6. The information processing device as described in claim 5, wherein

event clearance information showing the clearing of said events is stored in said storage means, and

said portable information terminal displays, on said image display means, suggestion information that indicates what to do now, based on said event clearance information stored in said storage means.

7. An information processing method in which data processing is done by an information processing device based on a video game program for advancing a story that consists of multiple events and recorded on a recording medium, comprising the steps of:

a storage step for storing, on a storage means of said information processing device, information on the results of the state of progress that shows the results of the state of progress of said story just before said information processing device performs data save processing; and

a display step for displaying information on the state of progress corresponding to the state of progress of said story just before the data save processing that corresponds to said information on the results of the state of progress which is information that is recorded on said recording medium, is executed.

8. The information processing method as described in claim 7, wherein

said information on the results of the state of progress includes information on the course of progress showing the course of progress of said story until just before data save processing is done by said information processing device, and event information at the time of the save processing showing the events just before said data save processing is done; and

information outlining the course of progress showing an outline of the content of the course of progress of said story until just before data save processing is done based on said information on the course of progress, and information on said event just before data save processing is done based on event information at the time of said save processing are displayed in said display step.

9. The information processing method as described in claim 7, wherein:

in said storage step, an event clearance information showing the clearance of said events is further stored in said storage means, and

in said display step, a suggestion information that indicates what to do now is displayed based on said event clearance information.

10. A recording medium on which is recorded a video game program for advancing a story consisting of multiple events causing data processing in an information processing device:

having a program recorded thereon that causes said information processing device to execute

a storage step for storing, on a storage means of said information processing device, information on the results of the state of progress that shows the results of the state of progress of said story just before said information processing device performs data save processing, and

a display step for displaying information on the state of progress corresponding to the state of progress of said story just before the data save processing is done that corresponds to said information on the results of the state of progress, which is information that is recorded on said recording medium.

11. The recording medium as described in claim 10, wherein

said information on the results of the state of progress includes information on the course of progress showing the course of progress of said story until just before data save processing is done by said information processing device, and event information at the time of the save processing showing the events just before said data save processing is done, and

information outlining the course of progress showing the content of the course of progress of said story until just before data save processing is done based on said information on the course of progress, and information on said event just before data save processing is done based on event information at the time of said save processing are caused to be displayed in said display step.

12. A recording medium as described in claim 10, wherein

in said storage step, an event clearance information showing the clearance of said events is further stored in said storage means, and

in said display step, a suggestion information that indicates what to do now is caused to be displayed based on said event clearance information.

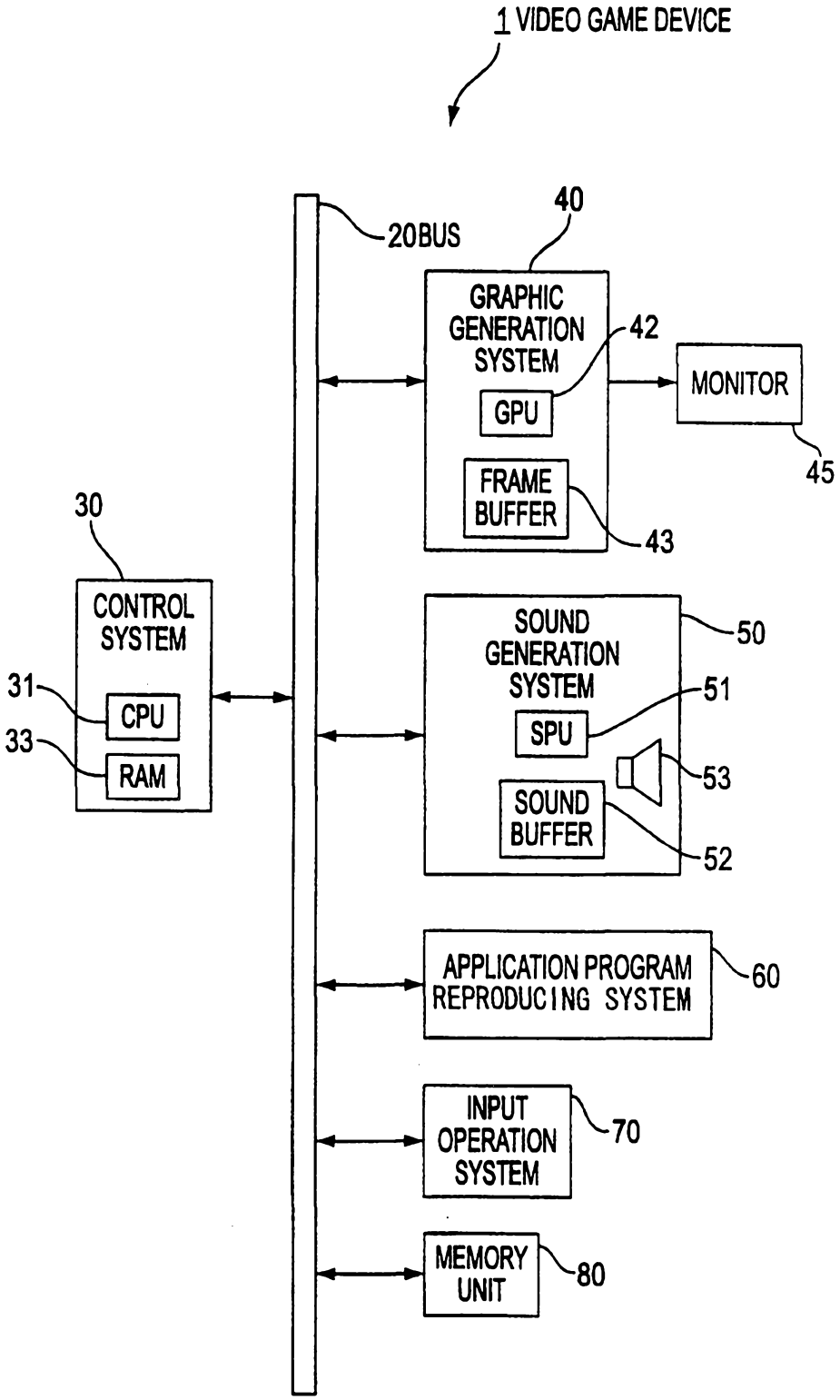
1 VIDEO GAME DEVICE
20BUS
40
GRAPHIC GENERATION SYSTEM
42
GPU
MONITOR
45
FRAME BUFFER
43
30
CONTROL SYSTEM
31
CPU
33
RAM
SOUND GENERATION SYSTEM
50
51
SPU
53
SOUND BUFFER
52
APPLICATION PROGRAM REPRODUCING SYSTEM
60
INPUT OPERATION SYSTEM
70
MEMORY UNIT
80

FIG. 1

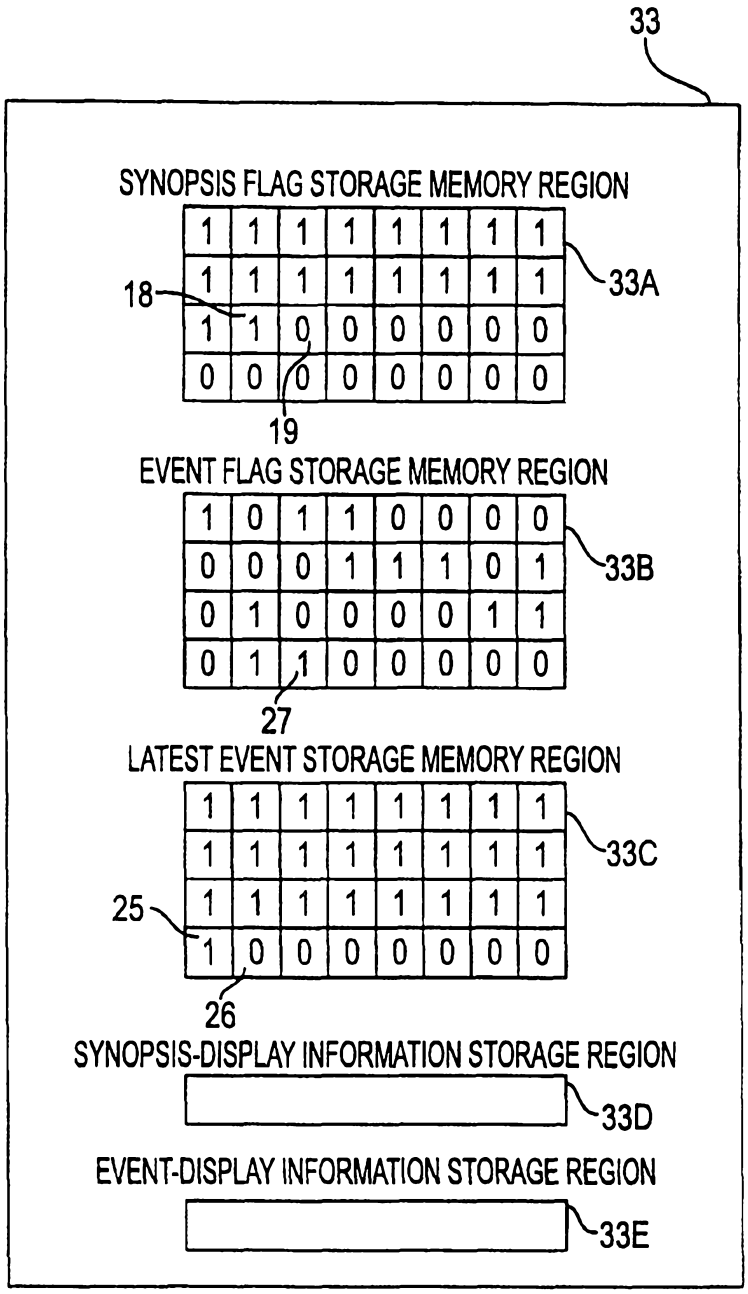
33
SYNOPSIS FLAG STORAGE MEMORY REGION
1 1 1 1 1 1 1 1
1 1 1 1 1 1 1 1
1 1 0 0 0 0 0 0
0 0 0 0 0 0 0 0
33A
18
19
EVENT FLAG STORAGE MEMORY REGION
1 0 1 1 0 0 0 0
0 0 0 1 1 1 0 1
0 1 0 0 0 0 1 1
0 1 1 0 0 0 0 0
33B
27
LATEST EVENT STORAGE MEMORY REGION
1 1 1 1 1 1 1 1
1 1 1 1 1 1 1 1
1 1 1 1 1 1 1 1
1 0 0 0 0 0 0 0
33C
25
26
SYNOPSIS-DISPLAY INFORMATION STORAGE REGION
33D
EVENT-DISPLAY INFORMATION STORAGE REGION
33E

FIG. 2

SYNOPSIS DATA	ADDRESS
00000	
00001	
00010	
• • • •	
11110	
11111	

FIG. 3

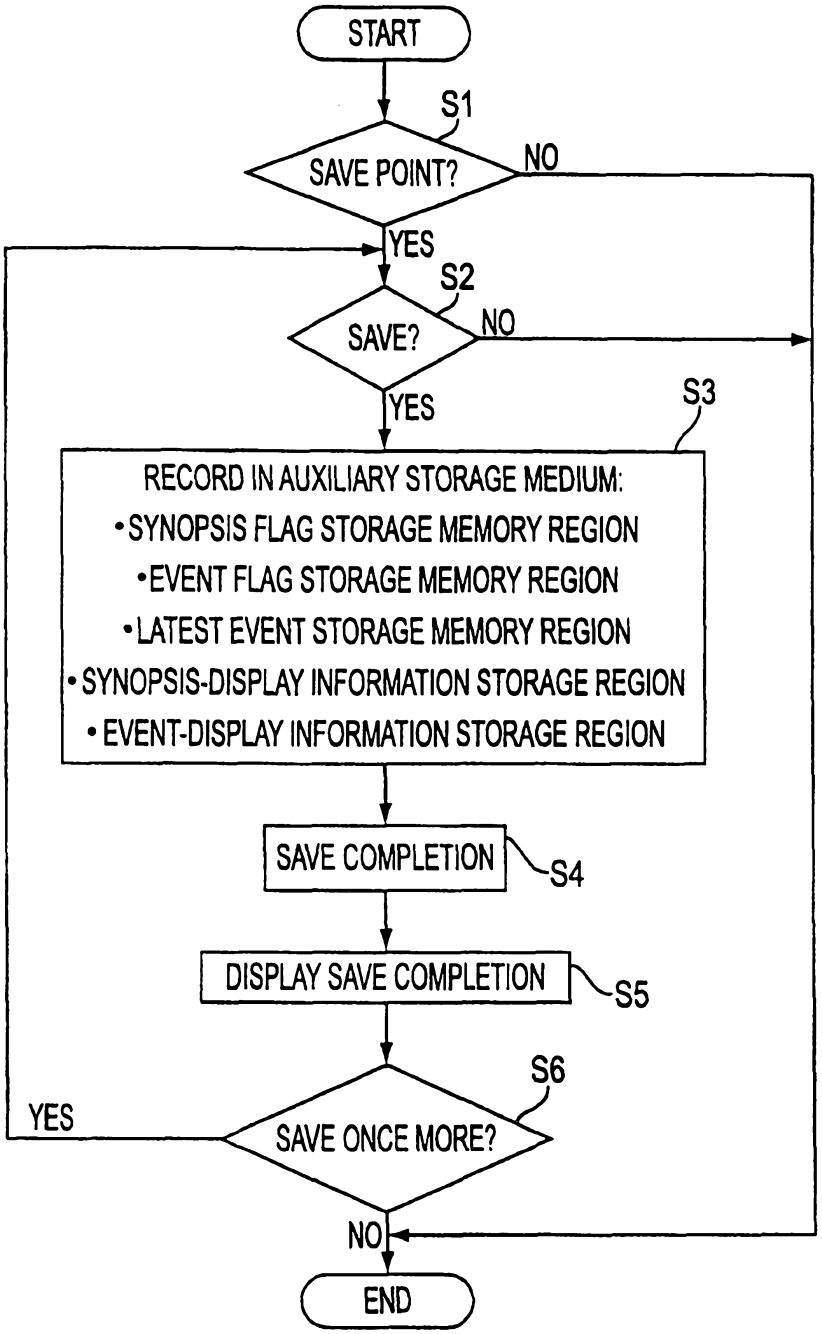
START
S1
SAVE POINT?
NO
YES
S2
SAVE?
NO
YES
S3
RECORD IN AUXILIARY STORAGE MEDIUM:
• SYNOPSIS FLAG STORAGE MEMORY REGION
• EVENT FLAG STORAGE MEMORY REGION
• LATEST EVENT STORAGE MEMORY REGION
• SYNOPSIS-DISPLAY INFORMATION STORAGE REGION
• EVENT-DISPLAY INFORMATION STORAGE REGION
SAVE COMPLETION
S4
DISPLAY SAVE COMPLETION
S5
S6
YES
SAVE ONCE MORE?
NO
END

FIG. 4

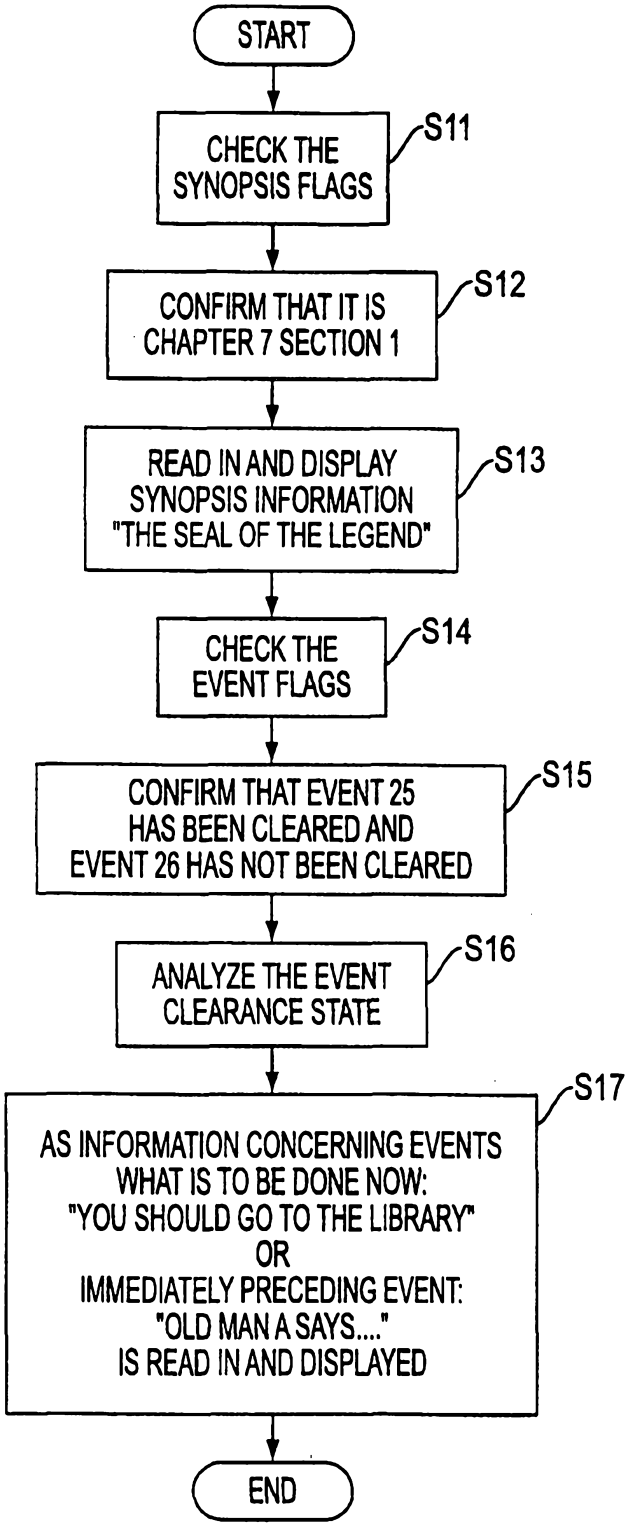
START
CHECK THE SYNOPSIS FLAGS
S11
CONFIRM THAT IT IS CHAPTER 7 SECTION 1
S12
READ IN AND DISPLAY SYNOPSIS INFORMATION "THE SEAL OF THE LEGEND"
S13
CHECK THE EVENT FLAGS
S14
CONFIRM THAT EVENT 25 HAS BEEN CLEARED AND EVENT 26 HAS NOT BEEN CLEARED
S15
ANALYZE THE EVENT CLEARANCE STATE
S16
AS INFORMATION CONCERNING EVENTS WHAT IS TO BE DONE NOW: "YOU SHOULD GO TO THE LIBRARY" OR IMMEDIATELY PRECEDING EVENT: "OLD MAN A SAYS...." IS READ IN AND DISPLAYED
S17
END

FIG. 5

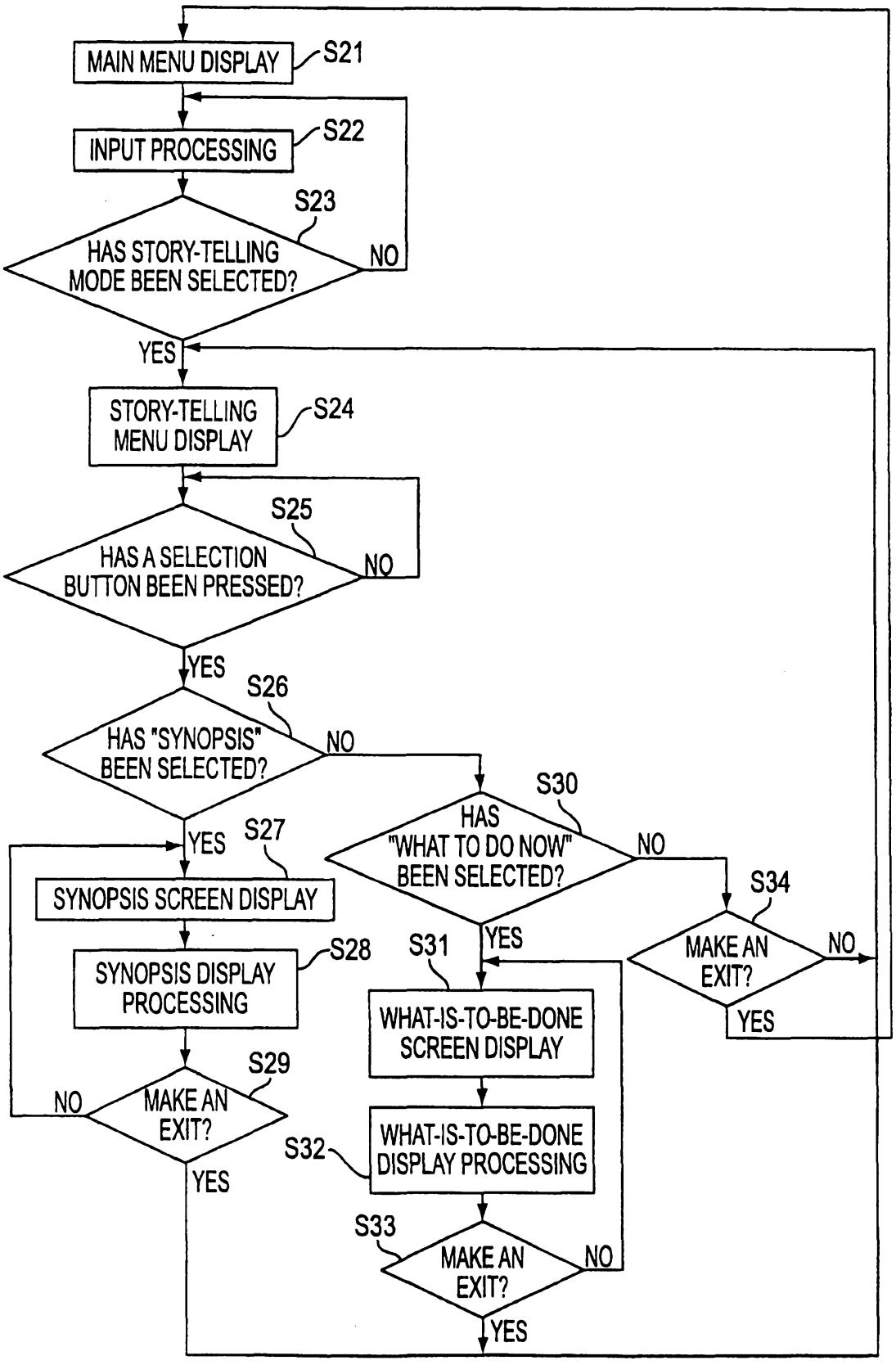
MAIN MENU DISPLAY
S21
INPUT PROCESSING
S22
S23
HAS STORY-TELLING MODE BEEN SELECTED?
NO
YES
STORY-TELLING MENU DISPLAY
S24
S25
HAS A SELECTION BUTTON BEEN PRESSED?
NO
YES
S26
HAS "SYNOPSIS" BEEN SELECTED?
NO
YES
S27
SYNOPSIS SCREEN DISPLAY
SYNOPSIS DISPLAY PROCESSING
S28
S29
MAKE AN EXIT?
NO
YES
S30
HAS "WHAT TO DO NOW" BEEN SELECTED?
NO
YES
S31
WHAT-IS-TO-BE-DONE SCREEN DISPLAY
WHAT-IS-TO-BE-DONE DISPLAY PROCESSING
S32
S33
MAKE AN EXIT?
NO
YES
S34
MAKE AN EXIT?
NO
YES

FIG. 6

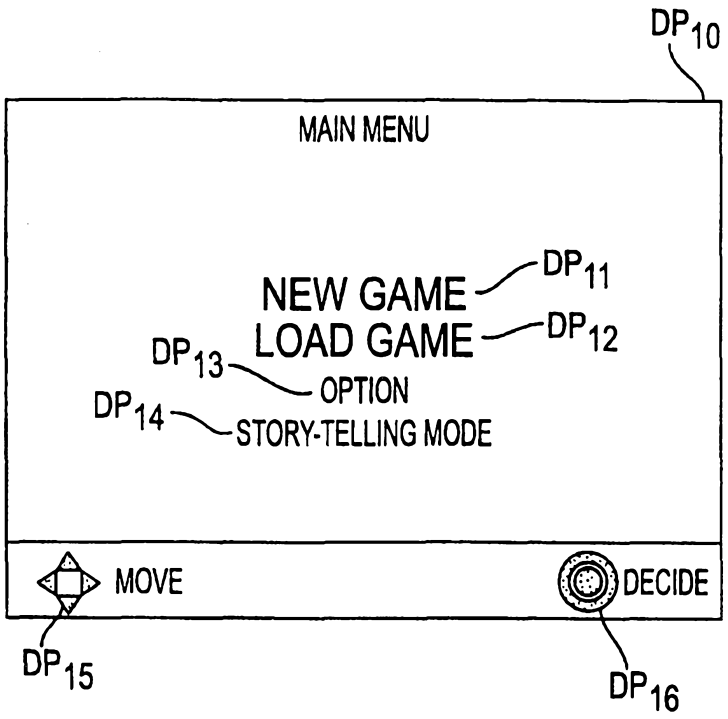
DP10
MAIN MENU
NEW GAME
DP11
LOAD GAME
DP12
DP13
OPTION
DP14
STORY-TELLING MODE
MOVE
DECIDE
DP15
DP16

FIG. 7

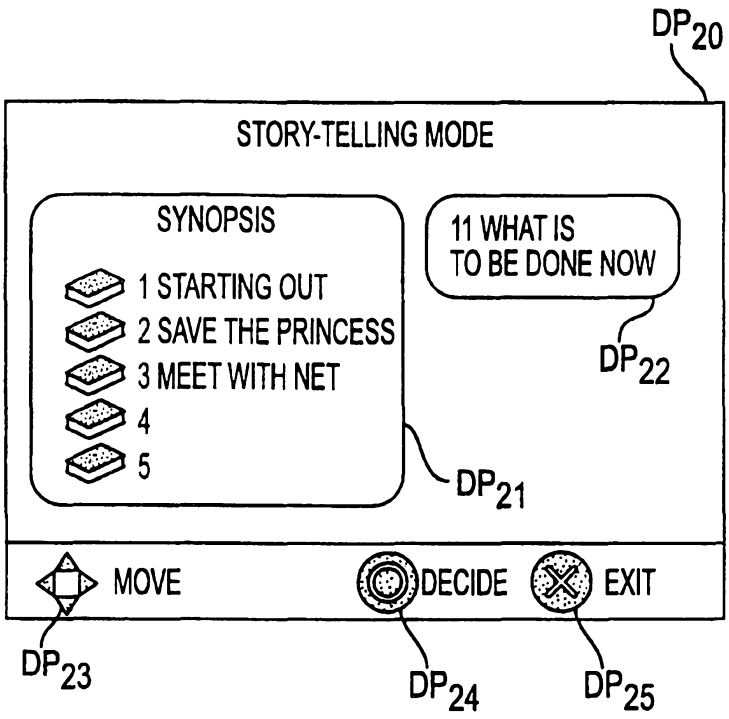
DP20
STORY-TELLING MODE
SYNOPSIS
1 STARTING OUT
2 SAVE THE PRINCESS
3 MEET WITH NET
4
5
11 WHAT IS TO BE DONE NOW
DP22
DP21
MOVE
DECIDE
EXIT
DP23
DP24
DP25

FIG. 8

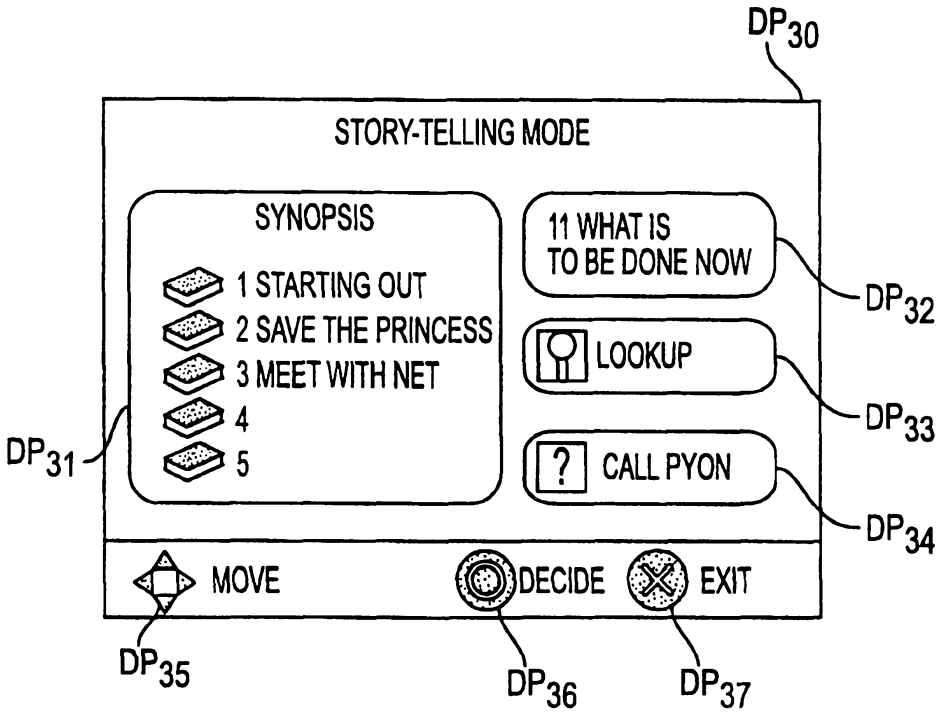
DP30
STORY-TELLING MODE
SYNOPSIS
1 STARTING OUT
2 SAVE THE PRINCESS
3 MEET WITH NET
4
5
11 WHAT IS TO BE DONE NOW
LOOKUP
CALL PYON
MOVE
DECIDE
EXIT
DP31
DP32
DP33
DP34
DP35
DP36
DP37

FIG. 9

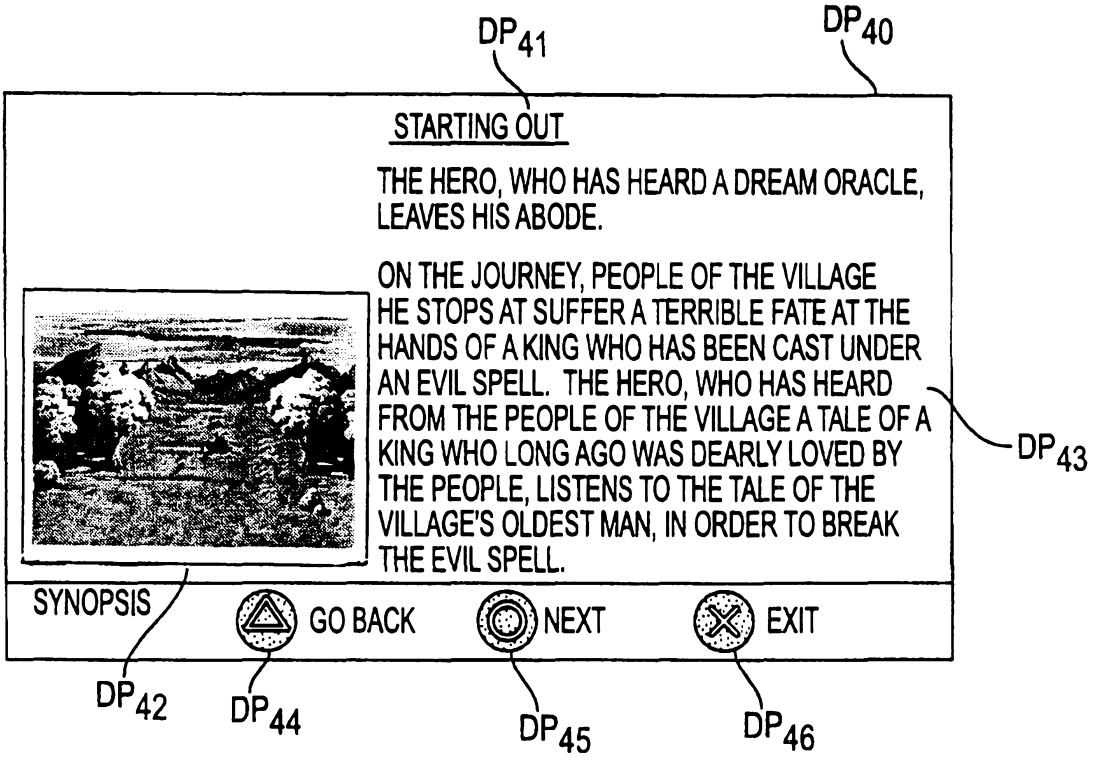
DP41
DP40
STARTING OUT
THE HERO, WHO HAS HEARD A DREAM ORACLE, LEAVES HIS ABODE.
ON THE JOURNEY, PEOPLE OF THE VILLAGE HE STOPS AT SUFFER A TERRIBLE FATE AT THE HANDS OF A KING WHO HAS BEEN CAST UNDER AN EVIL SPELL. THE HERO, WHO HAS HEARD FROM THE PEOPLE OF THE VILLAGE A TALE OF A KING WHO LONG AGO WAS DEARLY LOVED BY THE PEOPLE, LISTENS TO THE TALE OF THE VILLAGE'S OLDEST MAN, IN ORDER TO BREAK THE EVIL SPELL.
DP43
SYNOPSIS
GO BACK
NEXT
EXIT
DP42
DP44
DP45
DP46

FIG. 10

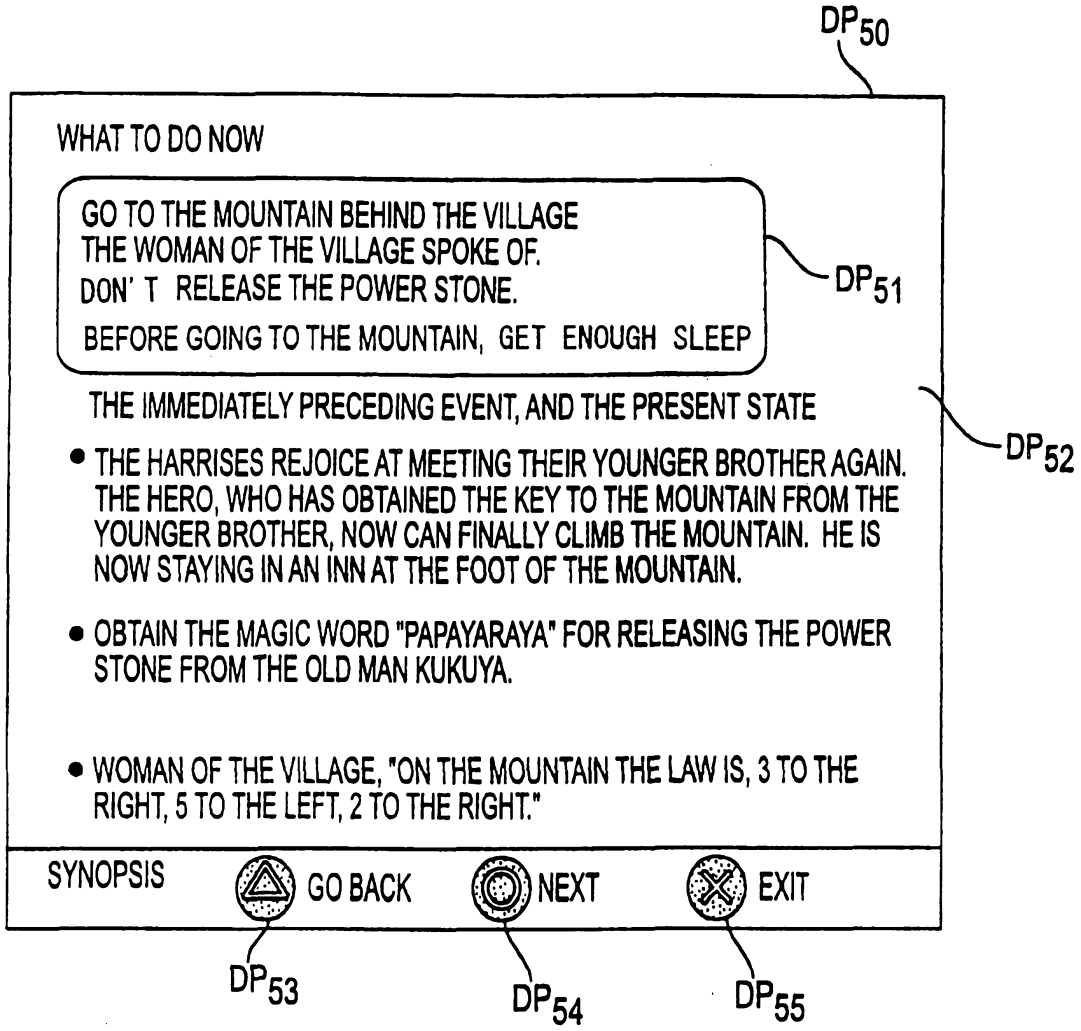
DP50
WHAT TO DO NOW
GO TO THE MOUNTAIN BEHIND THE VILLAGE
THE WOMAN OF THE VILLAGE SPOKE OF.
DON' T RELEASE THE POWER STONE.
BEFORE GOING TO THE MOUNTAIN, GET ENOUGH SLEEP
DP51
THE IMMEDIATELY PRECEDING EVENT, AND THE PRESENT STATE
DP52
• THE HARRISES REJOICE AT MEETING THEIR YOUNGER BROTHER AGAIN. THE HERO, WHO HAS OBTAINED THE KEY TO THE MOUNTAIN FROM THE YOUNGER BROTHER, NOW CAN FINALLY CLIMB THE MOUNTAIN. HE IS NOW STAYING IN AN INN AT THE FOOT OF THE MOUNTAIN.
• OBTAIN THE MAGIC WORD "PAPAYARAYA" FOR RELEASING THE POWER STONE FROM THE OLD MAN KUKUYA.
• WOMAN OF THE VILLAGE, "ON THE MOUNTAIN THE LAW IS, 3 TO THE RIGHT, 5 TO THE LEFT, 2 TO THE RIGHT."
SYNOPSIS
GO BACK
NEXT
EXIT
DP53
DP54
DP55

FIG. 11

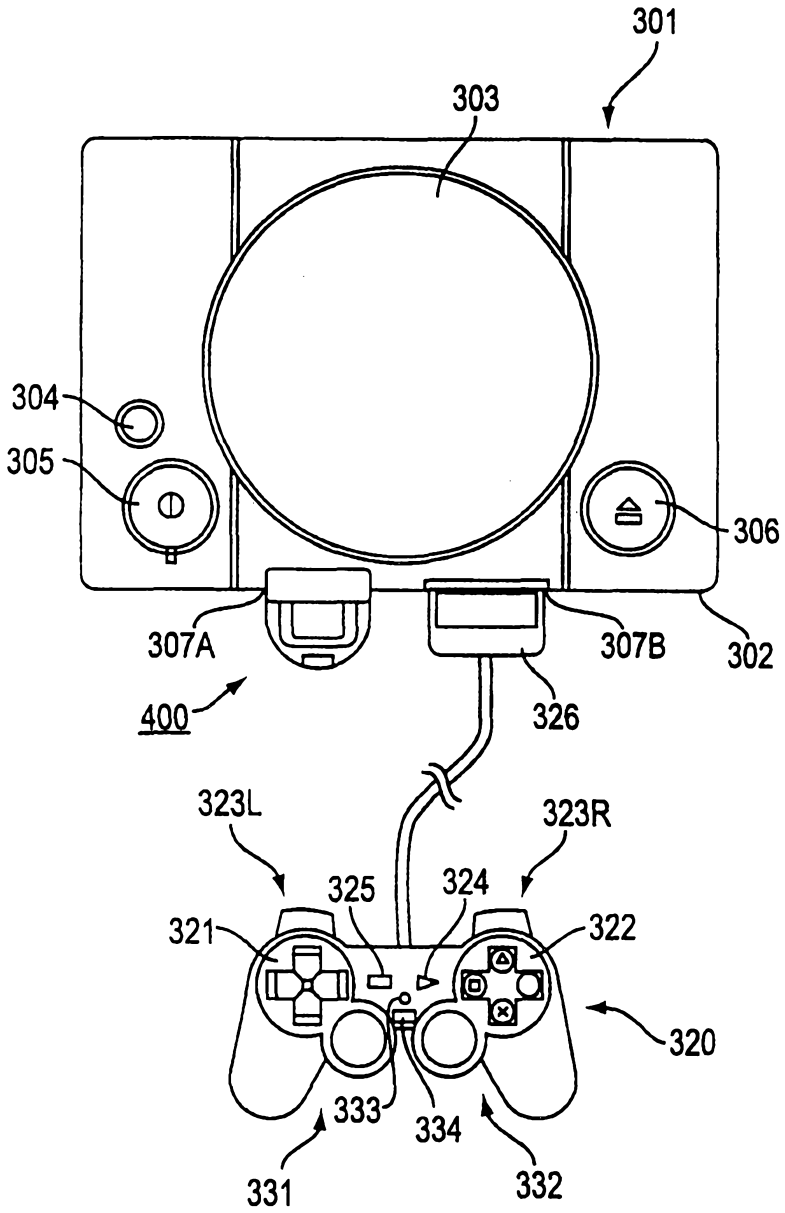
301
303
304
305
306
307A
307B
302
400
326
323L
323R
325
324
321
322
320
333
334
331
332

FIG. 12

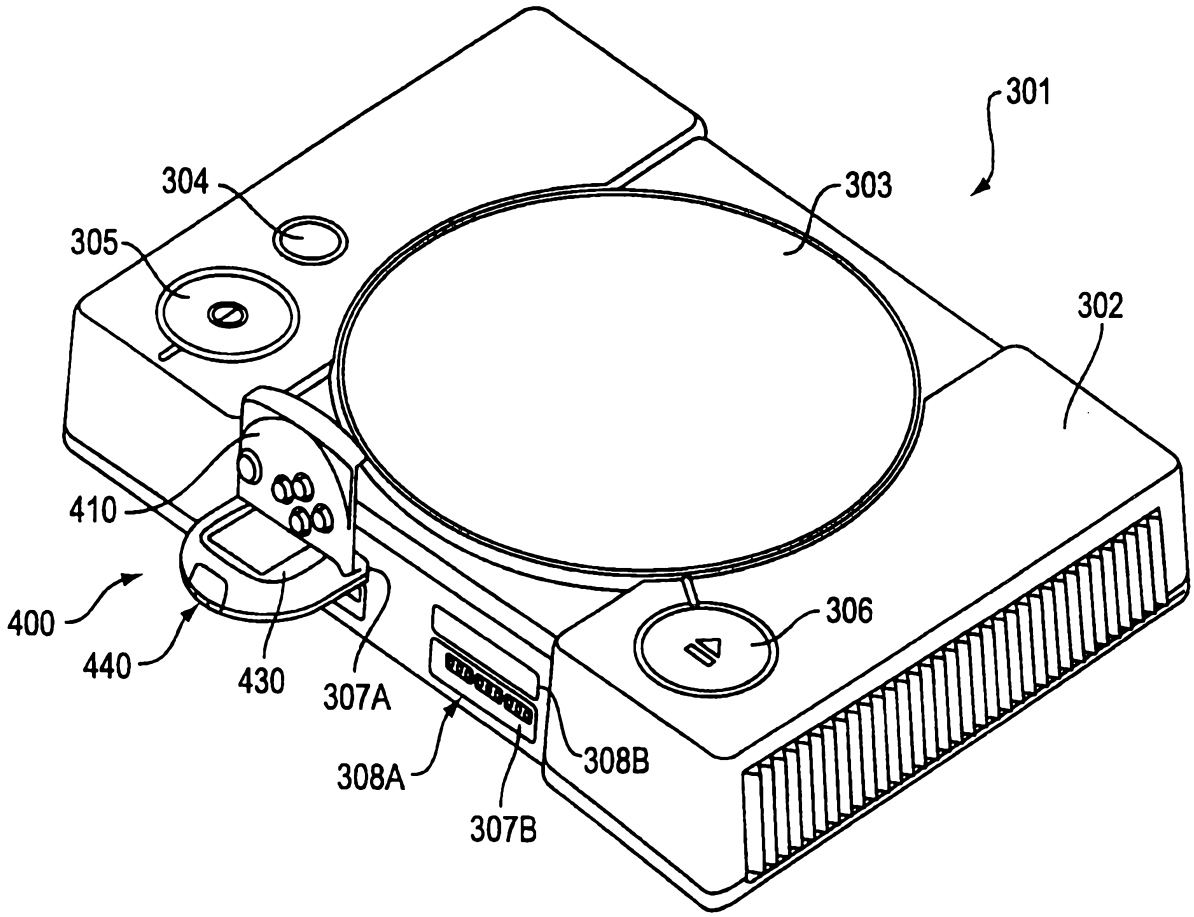

FIG. 13

FIG. 14A

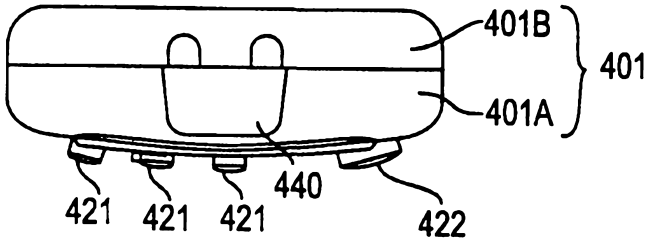

FIG. 14B

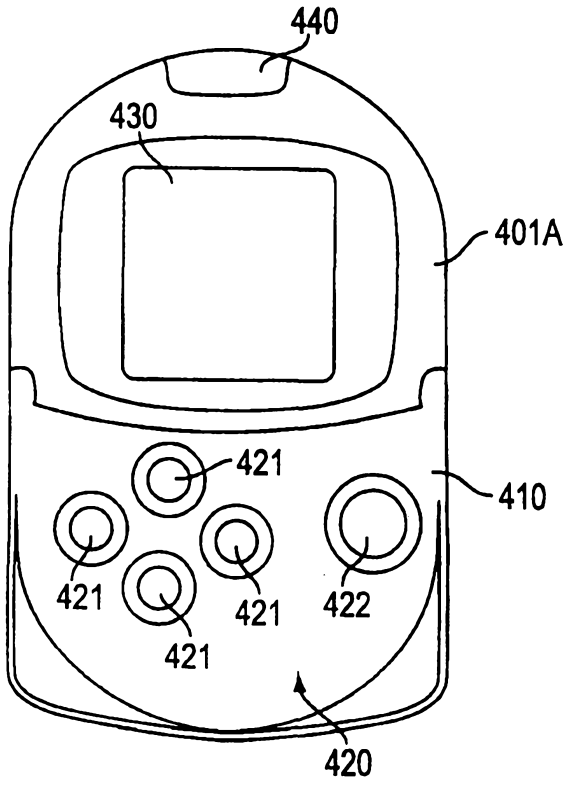

FIG. 14C

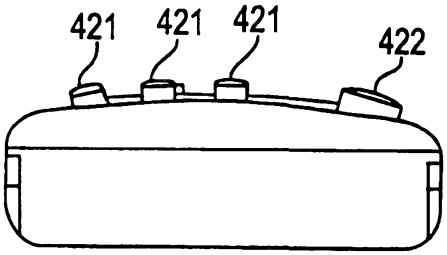

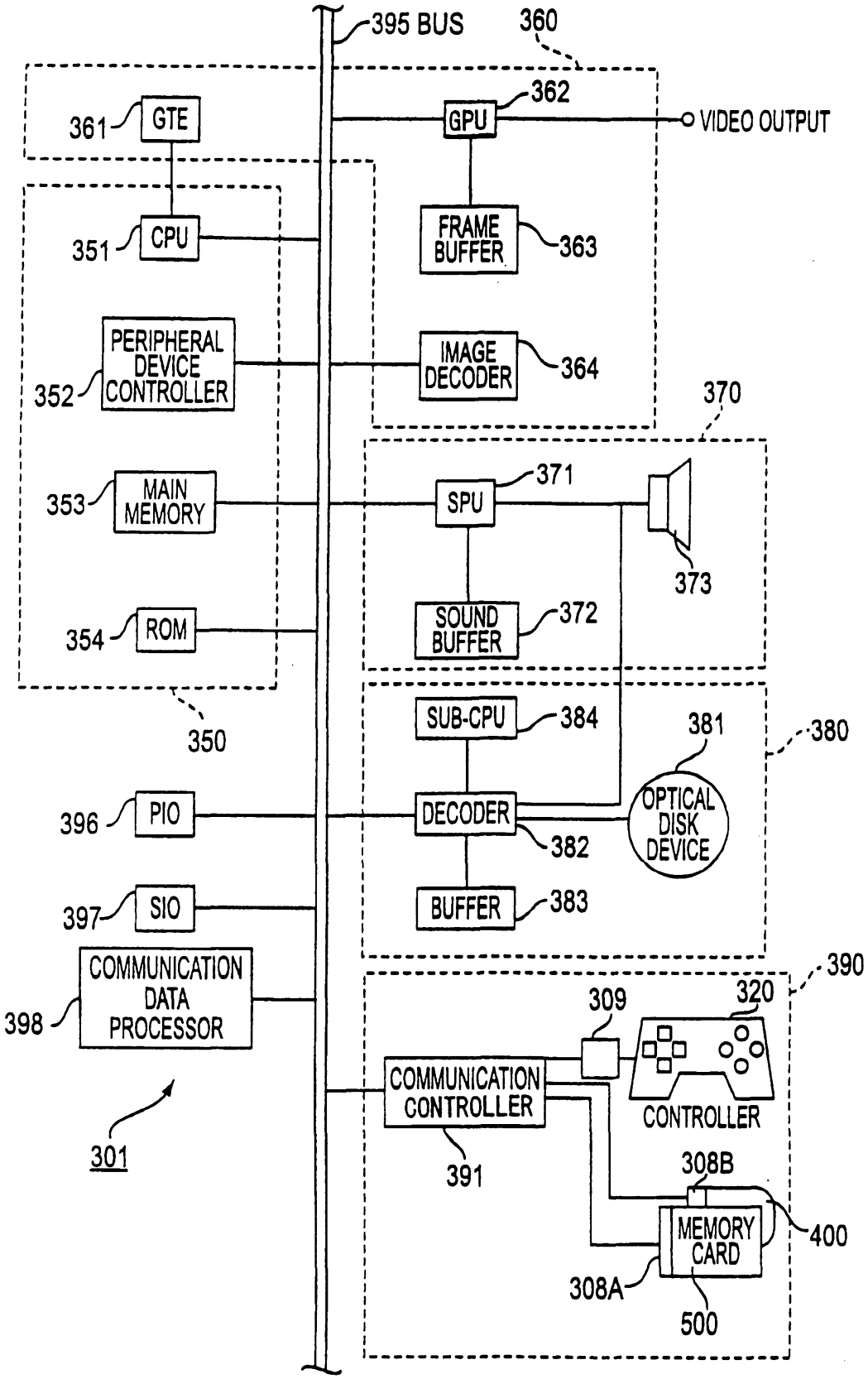
395 BUS
360
361
GTE
362
GPU
VIDEO OUTPUT
351
CPU
FRAME BUFFER
363
PERIPHERAL DEVICE CONTROLLER
352
IMAGE DECODER
364
370
353
MAIN MEMORY
371
SPU
373
354
ROM
SOUND BUFFER
372
350
SUB-CPU
384
381
380
396
PIO
DECODER
OPTICAL DISK DEVICE
382
397
SIO
BUFFER
383
390
COMMUNICATION DATA PROCESSOR
309
320
398
COMMUNICATION CONTROLLER
CONTROLLER
301
391
308B
MEMORY CARD
400
308A
500

FIG. 15

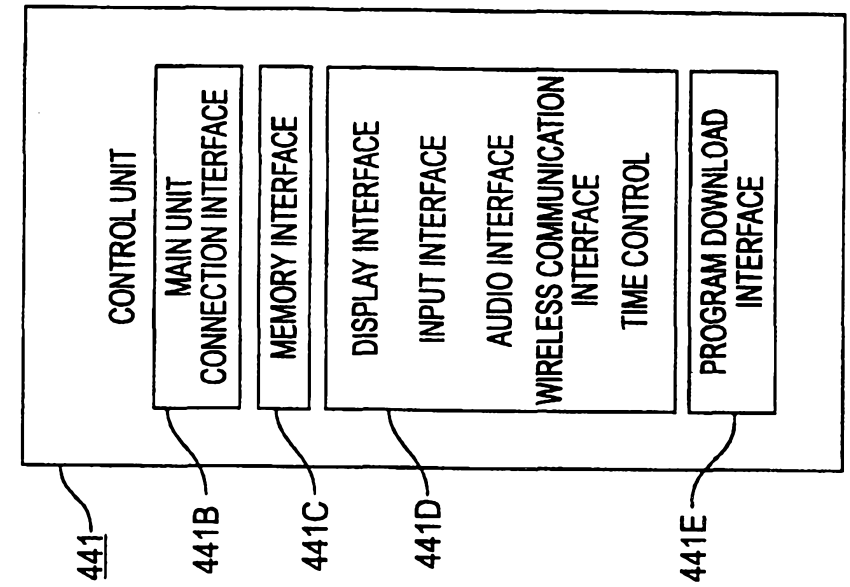

FIG. 16B

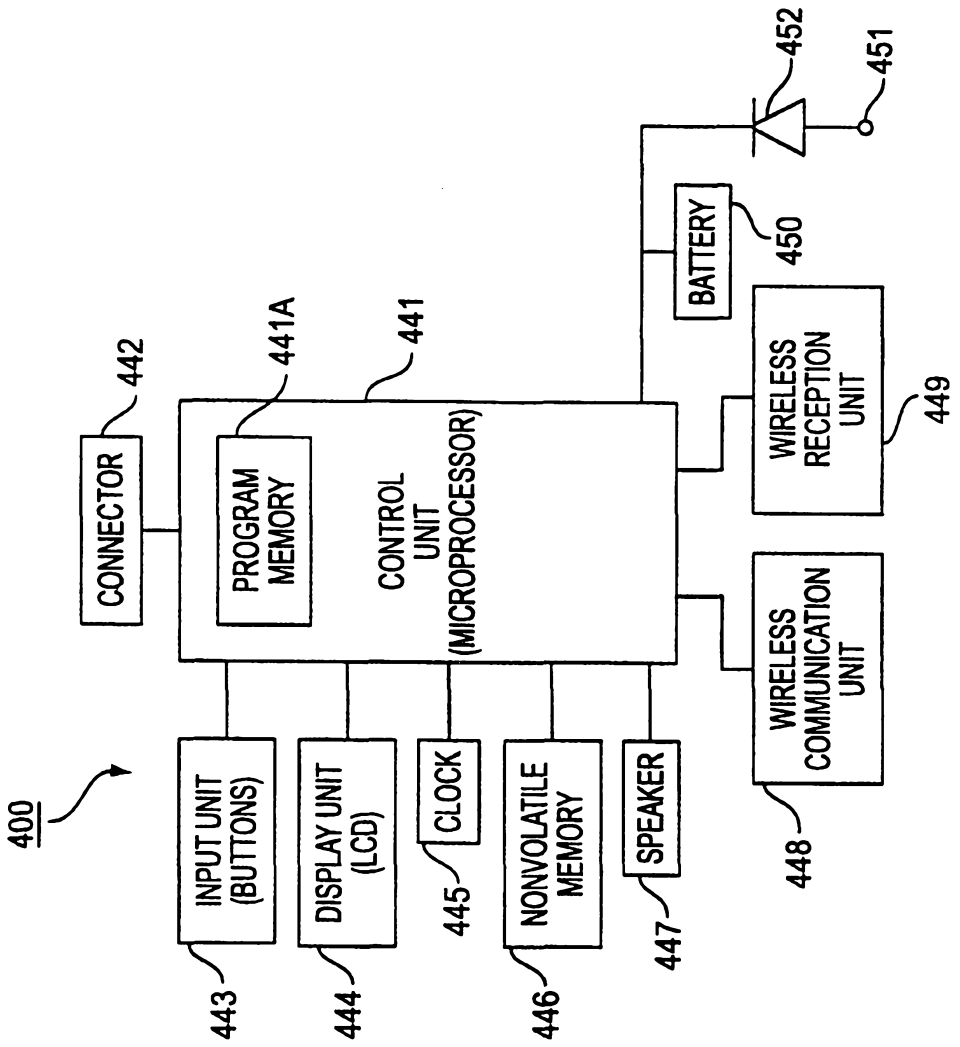

FIG. 16A