Sept. 29, 1959 J. E. JENNINGS 2,906,841

THREE-PHASE VACUUM SWITCH

Filed Jan. 3, 1956 2 Sheets-Sheet 1

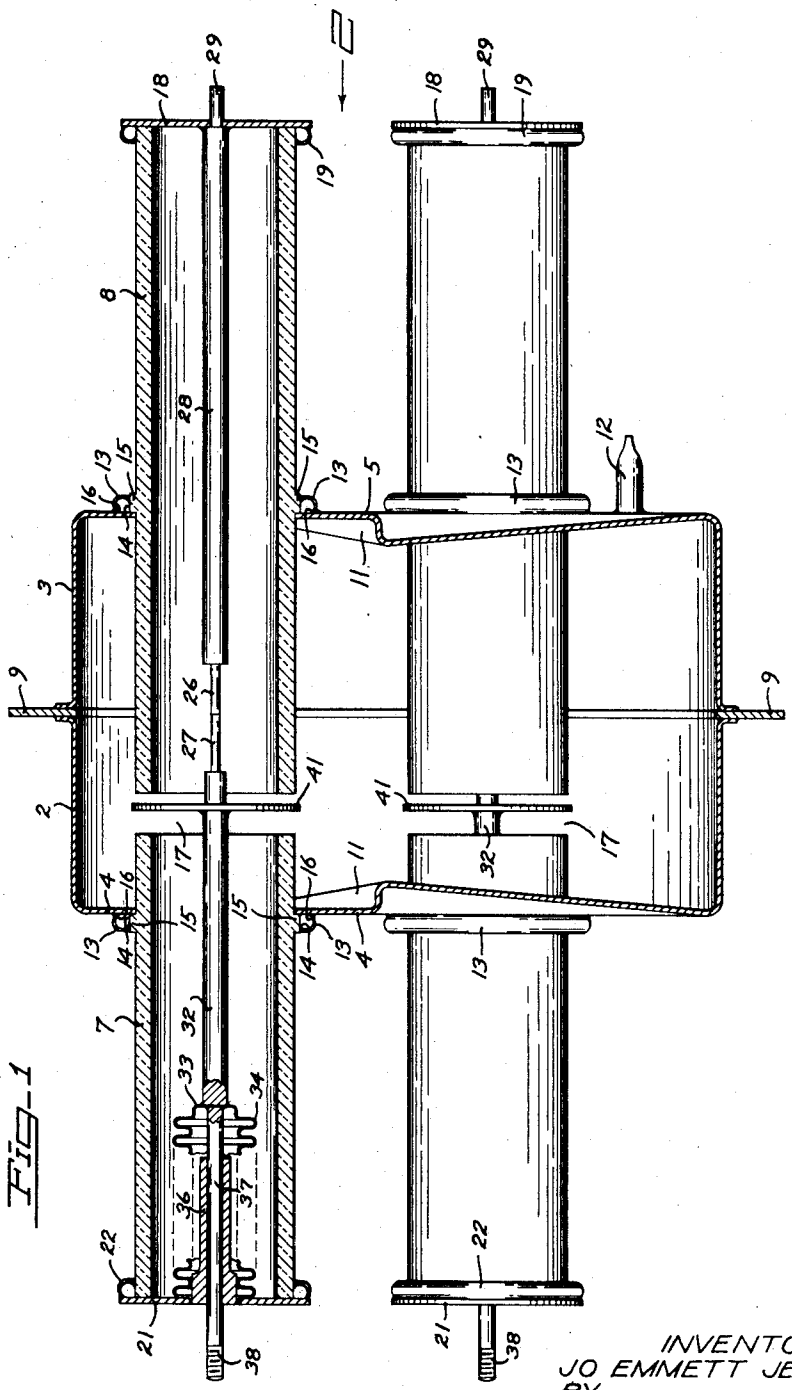

FIG-1

INVENTOR
JO EMMETT JENNINGS
BY
Charles S. Evans
his ATTORNEY

Sept. 29, 1959 J. E. JENNINGS 2,906,841

THREE-PHASE VACUUM SWITCH

Filed Jan. 3, 1956 2 Sheets-Sheet 2

Fig. 2

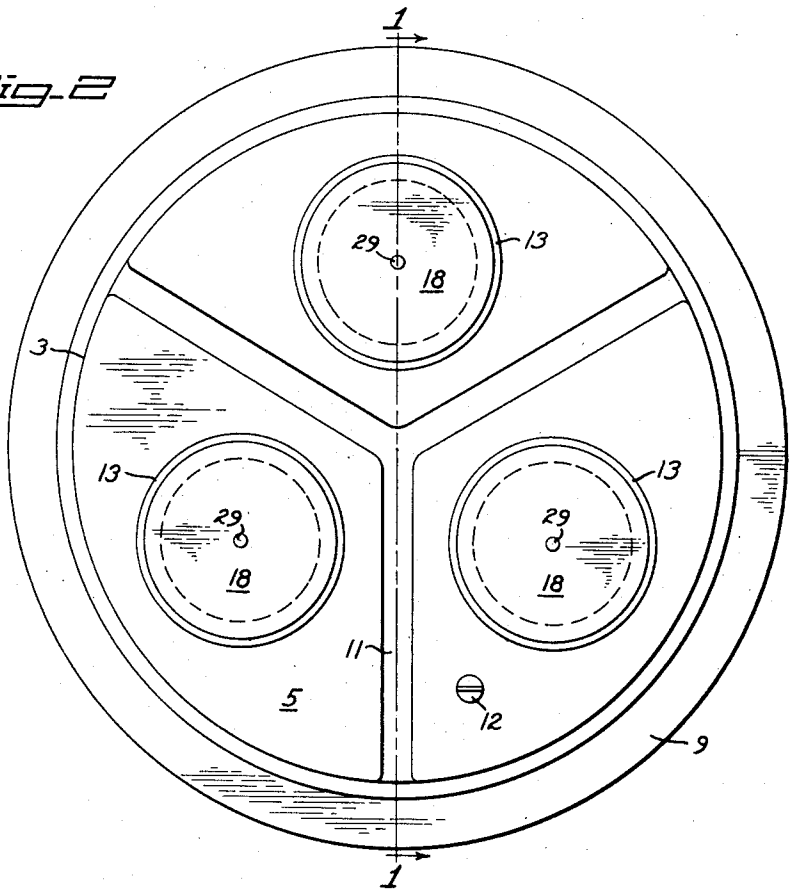

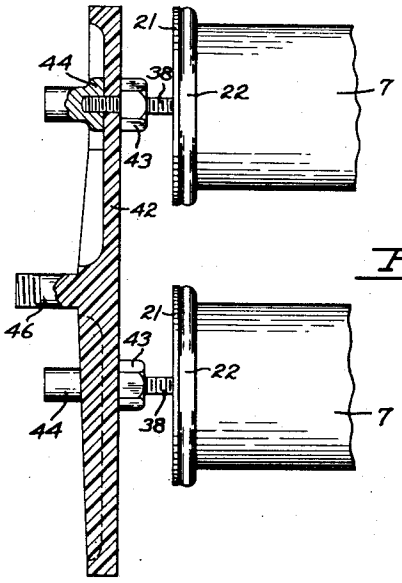

Fig. 3

INVENTOR
JO EMMETT JENNINGS
BY Charles S. Evans
his ATTORNEY

United States Patent Office

2,906,841

Patented Sept. 29, 1959

1

2,906,841

THREE-PHASE VACUUM SWITCH

Jo Emmett Jennings, San Jose, Calif., assignor to Jennings Radio Manufacturing Corporation, San Jose, Calif., a corporation of California

Application January 3, 1956, Serial No. 556,943

9 Claims. (Cl. 200—144)

My invention relates to vacuum switches having multiple contacts enclosed within a vacuumized envelope and adaptable for separate or simultaneous operation.

One of the objects of my invention is the provision of a 3-phase switch in which the three pairs of contact points are arranged within a single vacuumized chamber.

Another object is the provision of a multiple contact vacuum switch of such rugged construction as to be highly resistant to physical injury from external forces.

Another object is the provision of a multiple contact vacuum switch in which each fixed contact rod is concentrically supported in a ceramic tube which constitutes part of the switch housing and also a shield for the deposit and controlled dispersal of vaporized metal emanating from the contacts.

Another object of my invention is the provision of a vacuum switch structure in which the degassing temperature may be substantially raised with corresponding benefits in improvement of the vacuum.

Another object of my invention is the provision in a vacuum switch of an improved housing structure and shield for the contact rods.

Still another object of the invention is the provision of a vacuum switch in which the ratio of contact area to the inside area of the envelope is very small so that a long operating life is assured.

Other objects of the invention together with the foregoing will be set forth in the following description of my invention. I do not limit myself to the showing made by the said description as I may adopt variant embodiments of my invention within the scope of the appended claims.

Referring to the drawings:

Fig. 1 is a vertical sectional view of a 3-phase vacuum switch embodying my invention. The plane of section is indicated by the line 1—1 of Fig. 2.

Fig. 2 is an end view of my switch taken from the position indicated by the numeral 2 in Fig. 1.

Fig. 3 is a fragmentary view of the left hand end of a switch such as shown in Fig. 1, but with a dielectric connection between the movable contacts to enable their simultaneous operation.

In broad terms my vacuum switch comprises a generally cylindrical steel housing designed to withstand the high pressure of substantially complete evacuation; and having a plurality of pairs of aligned and oppositely disposed ceramic tubes extending from inside the main housing through its circular ends. Each tube terminates in a hermetically closed or sealed end cap; and each is also fixedly mounted in and hermetically sealed to the circular housing wall through which it extends. Within the main housing, the aligned ends of each pair of tubes are spaced apart, the gap being nearer to one end of the main housing than to the other. In each pair of aligned housing tubes, a mated pair of fixed and movable contact rods are concentrically supported on the end caps of the housing tubes; and operating means is provided to close and open a circuit through each mated pair at a point spaced

2

equally from the main housing end walls and to one side of the gap between the aligned tubes, so that one of the tubes of each pair forms a cylindrical shield about the contact points. The gap permits dispersal of vaporized metal from the contact points into the large chamber within the main housing.

In the operation of my switch metal is vaporized at the contact points. The metallic deposit from this vapor within the tubular shield is mainly adjacent its open end and is negligible adjacent its capped end. Vapor emerging from the open end of the shield is directed by a baffle against the metallic wall of the main housing and any deposit thereon is innocuous. There is therefore no build-up of a metallic conducting film within the vacuumized chamber of my switch, and which could cause shorting and failure.

In the embodiment of my invention shown herein, three pairs of aligned contact rods are shown. One rod of each pair is fixed within the envelope or housing and the pairs are spaced 120° apart. Means are provided for movably mounting one of the contact rods of each pair; and these movable contact rods may be connected if desired for simultaneous operation to close or open all circuits through my switch at the same time.

This mounting of a plurality of switches within a single vacuumized housing effects an important saving in space and weight over separate mounting of the switches, besides giving a more rugged structure at lower costs. It also simplifies assembly and speeds the labor of making connections.

By the use of stainless steel in the housing and the elimination of glass, the bake-out temperature can be considerably increased, perhaps as much as 400° to 500° F. Since degassing of metals is a function of time and temperature, I am able to achieve a higher degree of degassing and cleaner internal parts by using a temperature of about 1250° F.

My multiple pole switch design increases the amount of evacuated area to several times the area found in an evacuated single pole switch, thus materially increasing the life expectancy of the implement. The ratio of contact area of the contact points to the inside area of the envelope subject to deposit of metal is very small.

Where safety is a paramount factor in the switching of heavy currents, my design lends itself readily to connections with lead shielded high potential conductors by means of the conventional wiped joint connections and insulation.

In greater detail and with specific reference to the embodiment in the drawings, my switch comprises a cylindrical metallic main housing formed of two like parts **2** and **3**, in the opposite circular ends **4** and **5** of which, are seal-mounted three pairs of aligned or mated dielectric tubes **7** and **8**, preferably ceramic. The two conductive cup-shaped main housing parts are identical and are welded at their rims to the annular mounting flange **9**, by which the switch is mounted in its supporting panel. The housing is preferably stainless steel or nickel and ribs **11** are formed in the ends to provide stiffening against atmospheric pressure which follows vacuumization of the housing achieved through tubulation **12**.

The tubes **7** and **8** are aligned in pairs spaced equally around each end of the housing; and are seal-mounted in the housing ends over openings therein, by vacuum tight seals, comprising in each case a copper or nickel metal annulus **13** of C-shaped radial section, integrally united, as by brazing, on one rim **14** to the metallized annular bead **15** formed integrally on the ceramic tube, and on the other rim **16** integrally united to the adjacent surface of the housing end. This union permits small relative changes between the parts due to their different coefficients of expansion. Thus each ceramic tube ex-

tends through and is sealed in the end wall of the main housing, and terminates within the housing, but with a gap **17** between the inner ends of each mated pair. One of the tubes **8** extends further into the main housing than its aligned mate **7**, and is therefore longer, so that the gap between the inner ends of the aligned tubes lies well to one side of the central plane between the main housing ends.

The outer end of each tube **8** is closed hermetically by a copper closure plate or end cap **18**, sealed to the tube by the copper or nickel annulus **19**. The free end of each ceramic tube **7** is closed hermetically by a copper closure plate or end cap **21**, sealed to the tube by the annulus **22**, so that each ceramic tube provides a dielectric extension of the conductive main housing, the vacuumized chamber extending throughout the whole housing including the tubes. It will be noted that in addition to the inherent mechanical rigidity imparted to the structure by the integral union of the seal **13**, evacuation of the housing and tubes gives additional rigidity to the mounting of the tubes. Reduction of pressure within the housing results in the tubes being pressed inwardly by atmospheric pressure. This considerable inward pressure is carried by the annular bead **15** tightly abutting the inherently strong and rigid ends **4** and **5** of the main housing. The seals **13** are thus not subjected to undue mechanical stresses, and long life is assured.

Conductors terminating in tungsten contact points meeting midway between the housing ends, are mounted on the closure plates of each tube. On one side (right of Fig. 1) the points **26** are fixed. On the opposite side the points **27** are movable.

Contact points **26**, of tungsten, are secured in heavy copper contact rods **28**, integrally united as by brazing with and rigidly supported on the closure plate **18**. On the outside face of the closure plate the rod extends as stud **29** to provide a connecting lead.

Tungsten contact points **27** are fixed in heavy copper rods **32** brazed to the end **33** of the copper bellows **34**, the further end of which is brazed to the closure plate **21** and to the long bearing tube **36**, integrally connected to the closure plate. The assembly of contact rod, bellows, bearing tube, closure plate and ceramic tube is concentric about the long axis of the ceramic tube **7**, and in axial alignment with the mated concentric assembly of parts on the opposite end of the main housing.

Means are provided for moving the mobile contact point **27** into and out of engagement with the fixed contact point **26** to close or open the circuit controlled by these contacts. Brazed to the inside of the bellows end and slidably fitting in the bearing tube is the steel actuating shaft **37** by which the mobile contact point **27** may be pulled away from the fixed contact point **26** to open the circuit, or allowed to engage therewith to close the circuit. It will be understood of course that since the chamber within the housing and ceramic extensions thereof is vacuumized, atmospheric pressure within the bellows, maintained through the bearing bore in the bearing tube **36**, tends to keep the contact points **26** and **27** engaged. Any suitable operator, such as one actuated by a solenoid or air may be connected to the threaded end **38** of the shaft.

It is desirable to protect the relatively delicate bellows from the high velocity metallic particles projected by the arc; and I therefore mount a metallic shield plate **41**, on each mobile rod **32** near its free end. The shield plate may be flat or dished and extends past the adjacent rims of the ceramic tubes so that direct access to the bellows is blocked. A flat or slightly dished shield plate tends to direct a substantial portion of the vaporized metal produced by the arc toward a selected area on the inside of the main housing cylindrical wall; and thus to a sensible degree, concentrate the deposit in this harmless area.

It will be understood that my switch in the embodiment illustrated in Fig. 1 includes three pairs of aligned contacts and associated devices, each pair identical to the pair just described; and each pair independently operable to control the circuit therethrough. Means are provided however for operating all three pairs together if simultaneous control of the circuits is desired.

Referring to Fig. 3, each of the actuating shafts **37** is rigidly fixed in a dielectric disc **42** by nut **43** on one side and connecting lead or stud **44** on the other. The disk is suitably beaded and ribbed as shown for stiffness; and is provided at its center with a threaded stud **46** by which the disc may be connected to a suitable operator for simultaneous control of all three circuits.

I claim:

1. A vacuum switch comprising a vacuumized conductive housing, a pair of aligned dielectric tubes disposed on opposite ends of the housing and hermetically sealed thereto, a closure plate hermetically closing the free end of one of said tubes, a contact rod rigidly fixed on said closure plate and extending concentrically through the tube into the housing, a second closure plate hermetically closing the free end of the second tube and including a slide bearing concentric with the tube, a bellows enclosing the inner end of the bearing and hermetically sealed to the second closure plate, an actuating shaft slidably extending through the bearing and rigidly fixed at its inner end to the bellows, and a second contact rod rigidly fixed on the end of the bellows and extending concentrically through said second tube into the housing.

2. A vacuum switch as specified in claim 1 in which a shield plate is disposed on the second contact rod between its contact end and the edge of the associated dielectric tube.

3. A vacuum switch as specified in claim 1 in which the vacuumized conductive housing is a hollow steel cylinder closed by parallel end plates, and three said pairs of aligned dielectric tube assemblies are evenly spaced circumferentially on the housing ends.

4. A vacuum switch as specified in claim 1 in which the conductive housing comprises a pair of like cylindrical steel cups integrally united at their rims to a common steel annulus constituting a mounting flange.

5. A vacuum switch as specified in claim 1 in which the proportions of the parts are such that the contact points lie substantially equidistant from the ends of the housing.

6. A vacuum switch as specified in claim 1 in which the end of each dielectric tube opposite its free end extends into the housing.

7. A vacuum switch as specified in claim 1 in which each dielectric tube is provided with an annular bead abutting the adjacent housing end, and the tube beyond the bead extends into the housing.

8. A vacuum switch as specified in claim 3 in which a dielectric disk rigidly connects the three slidable shafts for simultaneous operation of the three movable contacts.

9. A vacuum switch comprising a vacuumized conductive housing, a pair of aligned dielectric tubes disposed on opposite ends of the housing and hermetically sealed thereto, a closure plate hermetically closing the free end of one of said tubes, a contact rod rigidly fixed on said closure plate and extending concentrically through the tube into the housing, a second closure plate hermetically closing the free end of the second tube and including a slide bearing concentric with the tube, a bellows enclosing the inner end of the bearing and hermetically sealed to the second closure plate, an actuating shaft slidably extending through the bearing and rigidly fixed at its inner end to the bellows, and a second contact rod rigidly fixed on the end of the bellows and extending concentrically through said second tube into the housing, at least one of said dielectric tubes extending into

the housing past the end of the enclosed contact rod to form a shield therearound.

References Cited in the file of this patent

UNITED STATES PATENTS

Re. 21,087	Rankin	May 16, 1939
1,784,303	Millikan et al.	Dec. 9, 1930
1,814,851	Prince	July 14, 1931
1,935,228	Kopeliowitsch	Nov. 14, 1933
1,972,362	Sorensen	Sept. 4, 1934
2,181,586	Perrymen et al.	Nov. 28, 1939
2,443,545	Schwennesen	June 15, 1948
2,557,928	Atkinson	June 26, 1951
2,740,867	Jennings	Apr. 3, 1956

FOREIGN PATENTS

703,177	Germany	Mar. 3, 1941
869,788	France	Nov. 17, 1941