J. V. & T. E. BOYETT.

AUTOMATIC SAFETY STARTER LOCK FOR AUTOMOBILE ENGINES.

APPLICATION FILED DEC. 28, 1916.

1,235,423. Patented July 31, 1917.

Fig. 1.

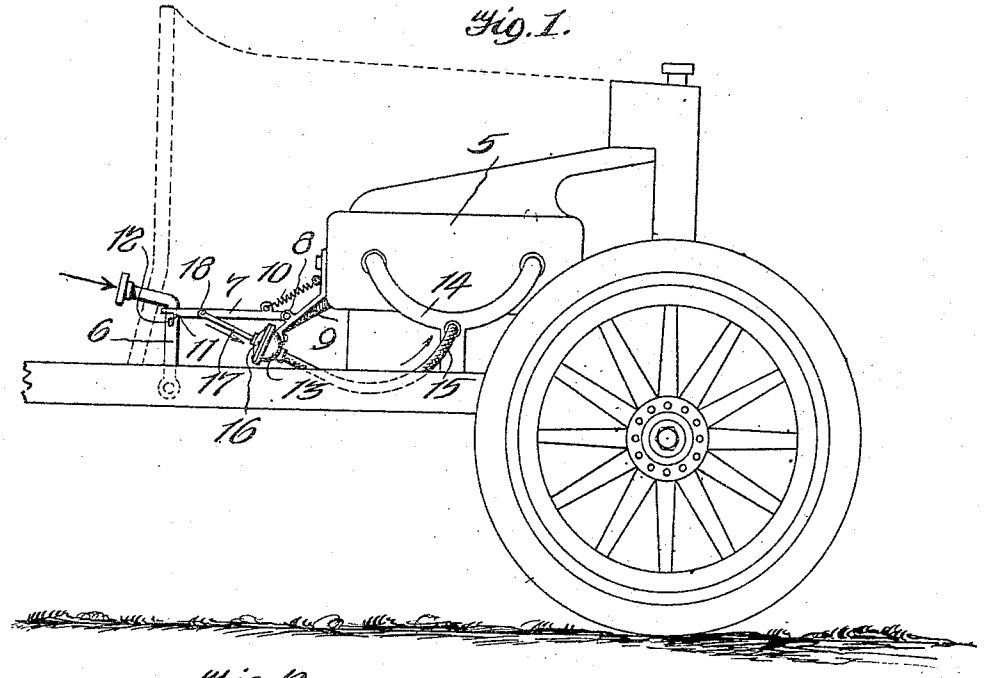

Fig. 2.

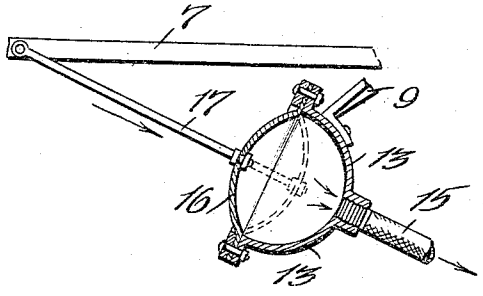

Fig. 3.

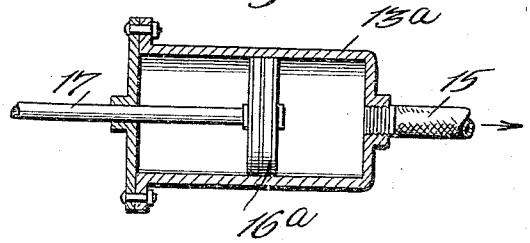

Fig. 4.

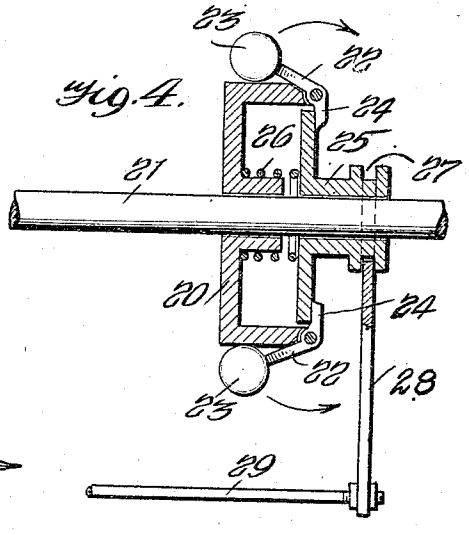

WITNESSES

E. M. Callaghan

W. E. Beck

INVENTORS

JAMES V. BOYETT,

THOMAS E. BOYETT,

BY Munn & Co.

ATTORNEYS

UNITED STATES PATENT OFFICE.

JAMES V. BOYETT AND THOMAS E. BOYETT, OF MOBILE, ALABAMA.

AUTOMATIC SAFETY STARTER-LOCK FOR AUTOMOBILE-ENGINES.

1,235,423. Specification of Letters Patent. Patented July 31, 1917.

Application filed December 28, 1916. Serial No. 139,339.

To all whom it may concern:

Be it known that we, JAMES V. BOYETT and THOMAS E. BOYETT, citizens of the United States, and residents of Mobile, in the county of Mobile and State of Alabama, have invented a certain new and useful Improvement in Automatic Safety Starter-Locks for Automobile-Engines, of which the following is a specification.

One of the principal objects of our invention is to provide an improved automatic starter lock for internal combustion engines, whereby to render impossible the coupling of the starter and the motor while the latter is running, and thereby to eliminate the danger of damage and breakage to the gears, which would result from an inter-engagement of the starter and motor gears while the latter is in motion.

Another object of the invention resides in the provision of means automatically operated by the motor for actuating a latch or other suitable device, whereby to render inoperative the starter pedal while the engine is running.

A still further object of our invention contemplates the provision of a speed responsive mechanism operable by one of the shafts of the motor for controlling the pedal lock.

A further object of the invention contemplates the provision of a vacuum actuated device controllable by the intake of the engine, for actuating the pedal latch or lock.

A still further object of our invention is to provide an improved device of the class described characterized by simplicity, durability, and economy of manufacture and maintenance.

With these and other objects in view which will become apparent as the description proceeds, the invention resides in the construction, combination, and arrangement of parts hereinafter more fully described and claimed, and illustrated in the accompanying drawings in which like characters of reference indicate like parts throughout the several figures, of which—

Figure 1 represents a view in elevation of a starter lock constructed according to our invention, showing the same as mounted upon an automobile engine;

Fig. 2 represents a view partially in section through the vacuum cup and associated parts;

Fig. 3 represents a view in section through a modified form of vacuum control device;

Fig. 4 represents a view in section through the speed responsive modification of control mechanism.

Referring more particularly to the drawings, an automobile engine is indicated generally at 5, and the pedal for actuating the starting device (not shown) is indicated at 6. This pedal is pivoted in the usual manner, and when the starting device is to be thrown into operation for turning the engine over, the pedal is adapted to be depressed by the foot of the driver.

Our invention resides in the means for controlling the pedal 6, and the embodiment indicated in Figs. 1 and 2 includes a latch 7 pivoted at one end as at 8 on a suitable bracket 9 mounted in convenient position on one of the engine parts, a spring 10 being utilized for normally holding the latch 7 in such position as to allow free movement of the pedal 6. When the engine is not running, therefore, the spring 10, in the particular arrangement shown, serves to elevate the latch so as to allow depression of the pedal for setting the starting mechanism in motion. The free end of the latch may be provided with a shoulder as at 11 which, when the latch is lowered against the tension of the spring 10, will serve as a stop for a lug 12 carried on the pedal, whereby to prevent depression of the pedal and hence preclude the coupling of the starter mechanism and engine together.

Supported on the bracket 9 is a vacuum cup indicated at 13, and connected with the intake manifold 14 of the engine by means of a suitable pipe 15. The cup includes a diaphragm 16 to which is suitably connected one end of a rod 17, the other end of said rod being pivotally connected in suitable manner as at 18 with the latch 7. The vacuum cup and rod 17 are arranged below the latch 7, so that when the diaphragm 16 is drawn into the cup, as indicated in dotted lines in Fig. 2, a pull will be exerted upon the latch downwardly against the action of spring 10, whereby to bring said latch into position for preventing the depression of the pedal 6. While the engine is running the partial vacuum created in the intake manifold of the engine will set up a partial vacuum in the cup 13, whereby to draw the diaphragm 16 into the cup in the position indicated, and hence continuously draw the latch downwardly in position to prevent depression of the pedal, and this will result in an in-

ability on the part of the operator to couple the starting motor with the engine motor, and hence all danger of accidentally throwing the starting device into gear with the motor while the latter is running, will be eliminated.

In lieu of the vacuum cup and diaphragm employed in the embodiment indicated in Figs. 1 and 2, we may utilize a cylinder and piston, as indicated in Fig. 3, the cylinder 13^a being connected by the pipe 15 with the intake manifold or pipe of the engine, and the piston indicated at 16^a being connected with the rod 17 for actuating the latch.

The speed responsive embodiment of the invention indicated in Fig. 4, includes the ring or collar 20 fixed on one of the shafts 21 of the engine, said collar or sleeve carrying pivoted governor arms 22 provided with weights 23 at their outer ends, and having their inner ends 24 arranged in the path of movement of a sleeve 25 axially of the rod 21. This sleeve is retained in one position relatively to the collar 20 through the medium of a coiled spring 26 interposed between the sleeve and collar, and the sleeve is provided with an annular groove 27 in which the forked end of an arm 28 plays. This arm is connected with a rod 29 for operating a starter pedal control latch (not shown) of suitable type. When the engine is at a standstill, the sleeve 25 being pressed outwardly by the spring 26, retains the balls 23 of the governor arms in the position indicated in Fig. 4, and said sleeve is in such position that the latch controlled by the rod 29 will allow depression of the starter pedal, so that the engine may be started up. As soon as the engine attains a predetermined speed, the rotation of the shaft 21, and with it the collar 20, will cause the balls 23 to swing outwardly, thus, through the action of the pivoted lever 22, shifting the sleeve inwardly against the tension of spring 26, and thus moving the rod 29 in such direction as to bring the pedal control latch into position for preventing depression of the pedal, and hence obviating any possibility of the starter and engine being coupled together while the engine is running above or at a predetermined speed.

Although we have described the preferred embodiments of our invention, we may desire to make such changes in the construction, combination, and arrangement of parts thereof, as do not depart from the spirit of the invention and the scope of the appended claims.

We claim:—

1. The combination with an engine, and a starter control pedal, of a pivoted latch for controlling the pedal, a spring for normally retaining the latch in position for allowing movement of the pedal, a vacuum cup including a diaphragm, a pipe connecting the cup with the intake pipe of the engine, and a rod connecting the diaphragm with the latch for actuating the latter against the tension of the spring when a vacuum is established in the cup.

2. The combination with an engine, and a starter control pedal, of a pivoted latch for controlling the pedal, a vacuum cup including a diaphragm, a pipe connecting the cup with the intake pipe of the engine, and connecting means between the diaphragm and the latch for moving the latter into position for preventing depression of the pedal when a vacuum is established in the cup.

3. The combination with an engine, and a starter control pedal, of a vacuum control device for the pedal, said vacuum control device being connected with the intake pipe of the engine.

4. The combination with an engine, and a starter control pedal, of a pivoted latch for controlling the pedal, and a vacuum control device for actuating the latch, said device being operably connected with the intake pipe of the engine.

5. The combination with an engine and a starter control pedal, of vacuum means controlled by the intake pipe of the engine, for controlling the said pedal.

6. The combination with an engine and a starter control means, of a vacuum control device, operably connected with the engine for controlling the operation of the starter control means.

JAMES V. BOYETT.
THOMAS E. BOYETT.

Witnesses:
THOS. G. WILKINSON,
THOS. E. DAVIS.