Jan. 27, 1970 K. HURST 3,492,453

SMALL DIAMETER INDUCTION HEATER HAVING FLUID COOLED COIL

Filed Sept. 17, 1968 3 Sheets-Sheet 1

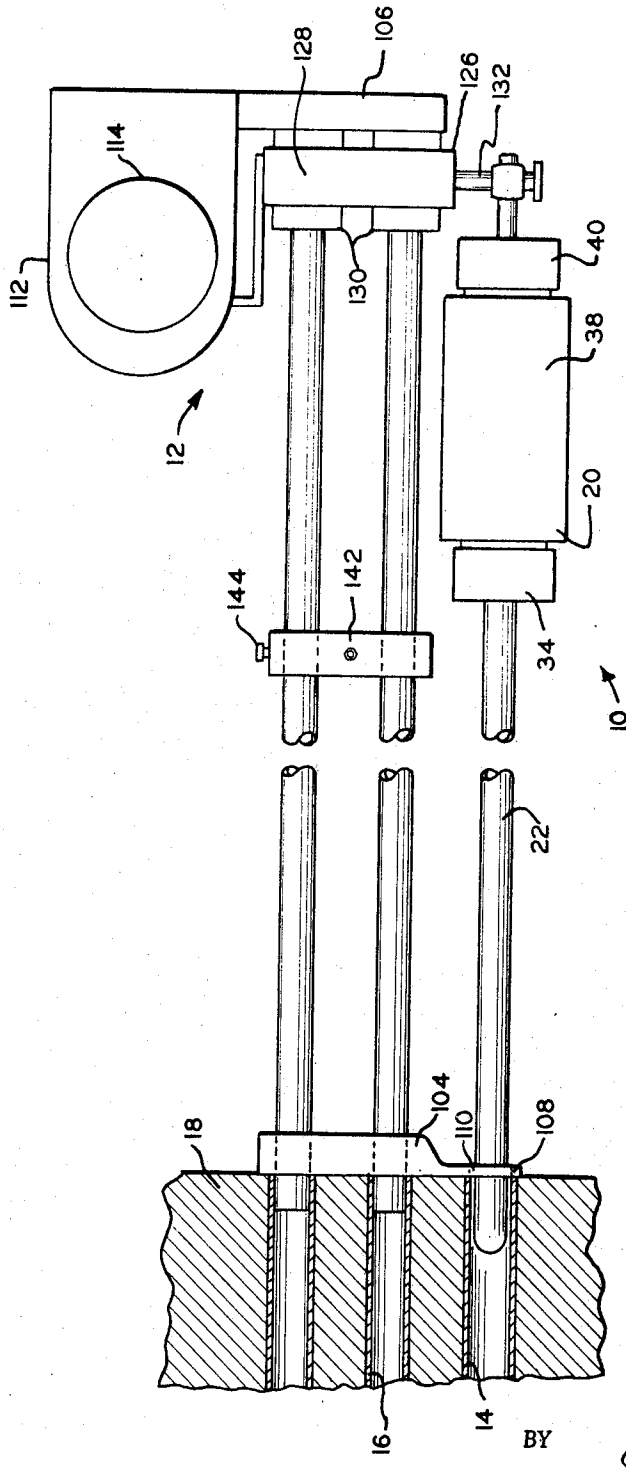

FIG. 1

INVENTOR.
KENNETH HURST
BY
John F. Carney
ATTORNEY

Jan. 27, 1970 K. HURST 3,492,453

SMALL DIAMETER INDUCTION HEATER HAVING FLUID COOLED COIL

Filed Sept. 17, 1968 3 Sheets-Sheet 2

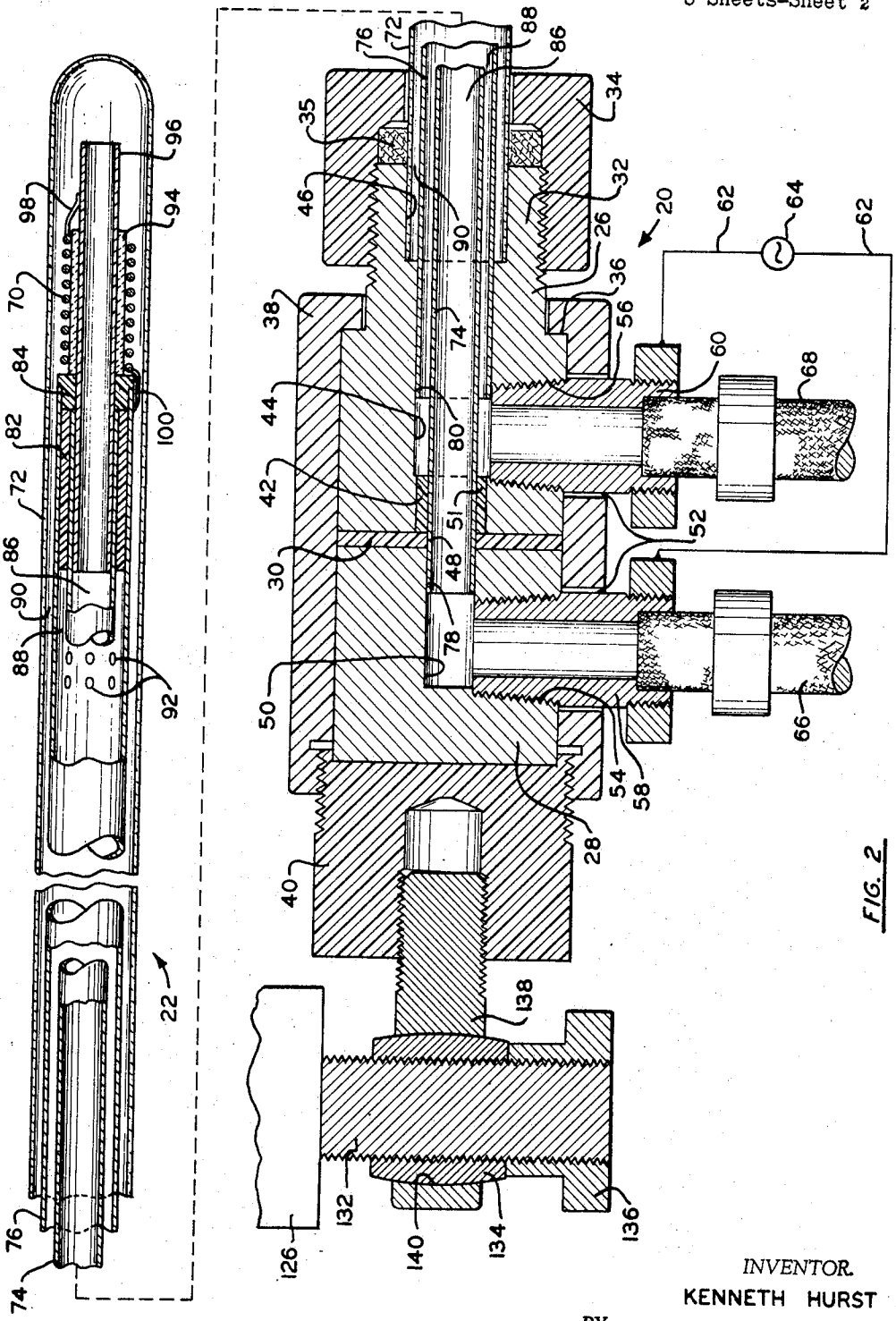

FIG. 2

INVENTOR.
KENNETH HURST

BY John F. Carney

ATTORNEY

Jan. 27, 1970 K. HURST 3,492,453

SMALL DIAMETER INDUCTION HEATER HAVING FLUID COOLED COIL

Filed Sept. 17, 1968 3 Sheets-Sheet 3

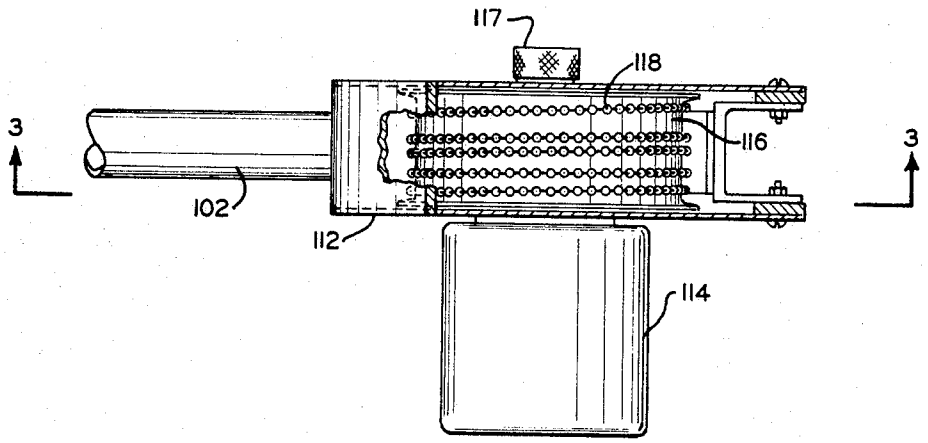

FIG. 4

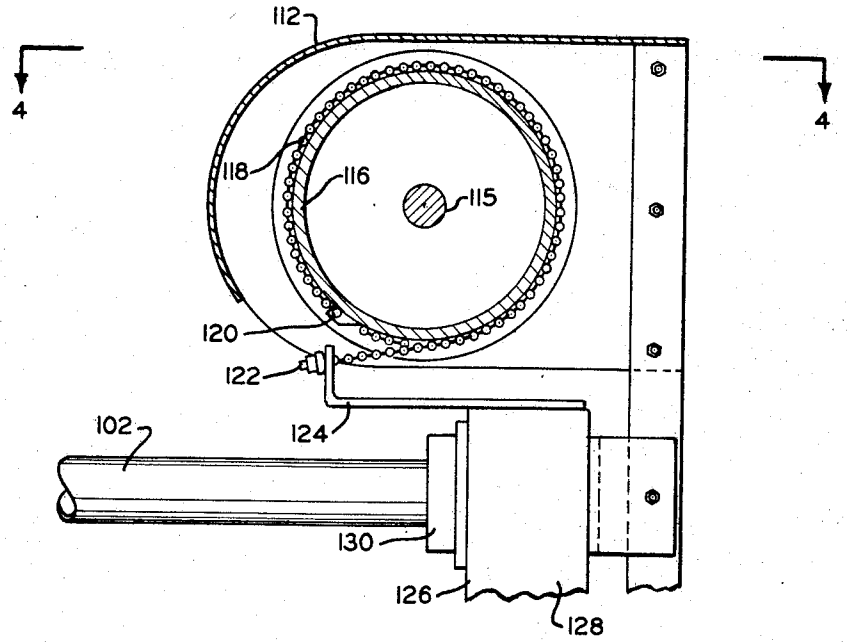

FIG. 3

INVENTOR.
KENNETH HURST

BY John F. Carney

ATTORNEY

United States Patent Office 3,492,453
Patented Jan. 27, 1970

3,492,453

SMALL DIAMETER INDUCTION HEATER HAVING FLUID COOLED COIL

Kenneth Hurst, Chattanooga, Tenn., assignor to Combustion Engineering, Inc., Windsor, Conn., a corporation of Delaware

Filed Sept. 17, 1968, Ser. No. 760,333
Int. Cl. H05b 5/00, 9/00, 9/02
U.S. Cl. 219—10.49 8 Claims

ABSTRACT OF THE DISCLOSURE

Induction heating apparatus particularly adapted for heating the interior surface of elongated, small diameter tubes. The apparatus includes a high frequency inductor coil formed of small diameter solid wire housed within a ceramic casing and connected to both a source of electrical energy and a source of cooling liquid by means of concentrically spaced tubular members whereby these members define part of the electrical circuitry of the apparatus and the fluid flow passages thereof in such a manner that the diametrical dimensions of the apparatus are held to a minimum.

BACKGROUND OF THE INVENTION

In the fabrication of heat exchangers of the shell and tube type, especially those employed for use as vapor generators in nuclear power plants, it is the practice to assemble large numbers of closely spaced, small diameter tubes, within a containment shell. In plants of increased capacity currently under construction and being contemplated, the vapor generators employ several thousands of tubes of about ¾ inch in diameter. Assembly of these tubes within the shell is effected by inserting the ends of the tubes into holes provided in a tube sheet that is formed as an integral part of the shell. The tubes are mounted to the tube sheet by expanding their ends into tight engagement within the walls of the holes.

Not infrequently, one or more of the tubes may become damaged during fabrication of the unit and after they are mounted in the tube sheet. When this occurs it has been the practice to replace the affected tube by severing its free portion from the end which is mounted in the tube sheet and thereafter remove the confined end from the tube sheet by drilling. It occassionally happens, however, that a damaged tube is not discovered until after several tube rows have been subsequently installed thereby preventing the removal of the affected tube without first removing a number of the later installed tubes in order that access to the damaged tube by a cutting tool can be had. In such cases it is normally found to be more desirable to merely plug the ends of the damaged tube and operate the heat exchanger at a slightly reduced capacity.

It has long been known that when problems such as these occur in heat exchangers employing tubes of greater diameter, the tubes can be dissassembled from the tube sheet by inserting a heater such as an inductor coil into the mounted tube end in order to impart induced expansive forces on the tube material which, due to the fact that the tube cannot radially expand within the tube sheet will generate high stresses in the tube material. If the generated stresses exceed the yield stress of the tube material the material will be caused to expand axially such that, upon cooling, the tube will contract to a diameter sufficiently small to permit easy disassembly of the tube from the tube sheet.

This method of tube removal has been prevented where tubes having as small a diameter as those employed in nuclear vapor generators are used due to the fact that induction heaters heretofore known in the art possesses too great a diametral dimension to be inserted into tubes of less than approximately one inch. The diameter of such heaters is dictated, in part, by the fact that they are manually operated and therefore, must employ completely insulated power connections. Moreover, means must be provided to pass a coolant in heat exchange relation with the inductor coil in order to prevent damage of the apparatus caused by overheating. In so-called compact heaters of the prior art this feature has been accomplished by employing inductor coils that are tubular and through which the cool liquid can be circulated. The use of tubular coils, however, adds measurably to the diameter of the heater thereby preventing their use as heaters of the type required by the instant application.

It is, therefore, a principle object of the present invention to provide a compact induction heater having sufficiently small diametral dimensions to be capable of being inserted into small diameter tubes of the order of ¾ inch or less.

SUMMARY OF THE INVENTION

According to the invention there is provided induction heating apparatus particularly adapted to be inserted within elongated, small diameter tubes that are mounted in tube sheets in order to heat the confined ends of these tubes. The apparatus includes a heater assembly comprising a pair of concentrically spaced tubular members housed within a ceramic casing. An axial extension of the inner of the two members extends beyond the outer member and mounts a ferrite ceramic bushing about which a solid wire inductor coil is wound. The tubular members are formed of electrically conductive material and are mutually insulated so as to define a current path for supplying power to the inductor coil while the concentrically spaced disposition of the members within the casing defines a coolant flow passage by means of which a cooling liquid can be circulated through the apparatus to prevent over-heating thereof. The invention further includes mechanisms operative to drive the heating apparatus within the tubular workpiece whereby uniform heating of the tube material confined within the tube sheet can be effected.

DESCRIPTION OF THE DRAWINGS

FIGURE 1 is a side elevation of induction heating apparatus of the present invention including motor drive means therefor operatively associated with tubes mounted in a tube sheet;

FIGURE 2 is a sectional elevation illustrating the induction heating apparatus of the present invention in detail;

FIGURES 3 and 4 respectively are a sectional elevation and plan view of the motor drive means employed in the disclosed embodiment of the invention.

DESCRIPTION OF THE PREFERRED EMBODIMENT

Referring to FIGURE 1 of the drawings for the purpose of description, one mode of induction heating apparatus, indicated generally as **10**, is illustrated together with its associated mechanism. In the drawing the induction heating apparatus **10** is shown as being operatively connected to an associated drive mechanism, indicated as **12**, that enables the heater apparatus to be applied to the interior of one of a number of small diameter tubes **14** that are mounted in tube holes **16** provided in the tube sheet **18** of a shell and tube type heat exhanger. In this application the induction heater apparatus **10** is effective to enable disassembly of a damaged or defective tube **14** from the tube sheet **18** after the former has been mounted in the latter by means of the radial expansion of the end of the tube into tight fitting engagement with the

interior surface of the tube holes **16** in the tube sheet. Disassembly is achieved by employing the induction heater **10** to apply heat to the interior of the tube **14** along that portion of its length that is enclosed within the tube sheet **18** for the purpose of imparting thermally induced stresses to the tube material in excess of its yield stress such that the tube, upon cooling, will contract to a diametral dimension that is less than that of the tube hole **16** whereby the tube can then be readily withdrawn from the hole.

The induction heater apparatus **10** includes in general, a body portion, indicated as **20**, and a heater portion, indicated as **22**, the apparatus, as illustrated, being operatively connected to the associated drive mechanism **12**. The body portion **20** of the apparatus comprises front and rear, generally cylindrical body members, **26** and **28** respectively, that are fabricated of electrically conductive material and that are mutually spaced from one another by means of an electrical insulator spacer **30** interposed between the two members. As shown, the front body member **26** is provided at its leading end with an integrally formed cylindrical extension **32** having external threads adapted to attach an internally threaded insulator cap **34** and packing member **35**. The extension **32** possesses an external diametral dimension that is somewhat less than that of the remainder of the member **26** so as to provide an annular shoulder **36** that operates to mount an insulated housing sleeve **38** which encloses the assembled body members **26** and **28** and spacer **30**. The rear end of the sleeve **38** is formed with an internally threaded opening adapted to connect insulated adapter plug **40** that completes the external insulation of the body portion **20** and which serves to connect the induction heater apparatus **10** to the drive mechanism **12** as hereinafter described.

Means are provided in the body portion **20** to mount the heater portion **22** in a way as to enable the supply of electrical current and cooling fluid thereto. As shown, the interior of the front body member **26**, including its axial extension **32**, is provided with an axially disposed throughbore having three longitudinally spaced portions indicated as **42**, **44**, and **46** respectively and each being formed with increasing diameters from rear to front of the member. The spacer **30** is centrally apertured, as at **48**, and the rear body member **28** contains an axial bore **50** which extends only part way therethrough, the aperture **48** and bore **50** being sized and located to conform with a through opening provided in insulation bushing **51**, the latter being disposed in bore **42** of the front body member **26**.

The housing sleeve **38**, at **52**, and both body members **26** and **28**, at **54** and **56** respectively, are provided with radial apertures to receive a pair of threaded nipples **58** and **60** that communicate with the bore **50** in the rear body member **28** and bore portion **44** in front body member **28** respectively. The nipples **58** and **60** are formed of electrically conductive material and connect by means of electric leads, indicated generally at **62**, with a source of high frequency electrical power **64** to supply electric current to the inductor coil of the apparatus. The nipples **58** and **60** are internally bored and are connected by means of flexible fluid conduits **66** and **68** to a source of cooling liquid (not shown) whereby circulation of the cooling liquid through the apparatus is effected. In the arrangement shown nipple **58** defines the cooling liquid inlet to the apparatus while nipple **60** defines the cooling liquid outlet thereof.

The heater portion **22** of the apparatus **10** comprises a series of concentrically related tubular members that mount an inductor coil **70** and which are so disposed and arranged as to conveniently effect the supply of electric current to the coil and of cooling liquid in heat exchange relation thereto. Thus, the heater portion **22** includes an external tubular casing **72** that is closed at its leading end and which may be formed of a ceramic material to provide insulating properties to this portion of the apparatus. As shown, the casing **72** has its rear, open end fixedly mounted by any well known means within bore portion **42** of the front body member **26**. The casing **72** encloses a pair of concentrically disposed, open ended tubes, indicated as inner tube **74** and outer tube **76**, that extend axially through the casing and whose respective rear ends **78** and **80** mount in the bore **50** in the rear body member **28** and bore portion **44** of front body member **26**. The tubes **74** and **76** are concentrically spaced by means of insulator bushings **82** and **84** thus to define three concentrically separated fluid flow passages **86**, **88** and **90**, that extend through the heater portion **22** with passage **86** communicating with the through-opening in the inlet nipple **58** to form the cooling liquid inlet passage and passage **88** communicating with nipple **60** to form the cooling liquid outlet passage. As shown, the passage **90** between the outer tube **76** and casing **72** communicates with outlet passage **88** by means of a plurality of radial openings **92** circumferentially spaced about the forward end of tube **76**. The remainder of passage **90** is a region of liquid stagnation forming a thermal shield to protect the casing **72** against overheating.

The inductor coil **70** is arranged as part of an assembly unit axially disposed adjacent the forward end of the interior casing **72**. The unit includes a small diameter, solid wire coil **70** that is helically wound for a number of turns about a bushing **94**, formed of powdered insulated particles of magnetic iron. The bushing **94** is concentrically mounted to a short length of tubing **96** formed of electrically conductive material which is received within the forward end of inner tube **74** and which extends beyond the end of the inductor coil **70** to a position slightly spaced from the closed end of casing **72**. A tight fit is maintained between the tube **96** and inner tube **74** in order that electric current can be passed along the tubes to the coil which is attached at its ends, **98** and **100** respectively to the ends of tubing **96** and outer tube **76** respectively.

The operation of the induction heater apparatus **10** thus far described is as follows. The heater portion **22** of the apparatus is positioned within the interior of tube **14** to the desired depth of application of heat to the tube material. High frequency currents are supplied to the coil **70** from electric source **64** and flow from the source seriatim through inlet nipple **58**, rear body member **28**, inner tubes **74** and tube **96** to the coil and then back through outer tube **76**, front body member **26** and outlet nipple **60** to complete the electric circuit. These high frequency currents create a magnetic flux field which induces high frequency currents to flow in the tube **14** causing the material to rapidly heat. As current is supplied to the coil **70** the apparatus is withdrawn from the tube **14** at a constant rate in order that the tube **14** will be heated uniformly over that portion of its length that is retained within tube sheet **18**. At the same time, overheating of the apparatus is prevented by the circulation of cooling liquid which is maintained for so long as the coil **70** is energized. The path of liquid flow between conduit **66** and **68** and through the apparatus is defined by the series connection of passages consisting of the opening through the inlet nipple **58**, bore **50**, passage **86** and tube **96** to the interior of casing **72** and thence to passage **90**, openings **92**, passage **88**, bore portion **44** and back to the opening through outlet nipple **60**.

In the particular application described, heating the tube **14** along that portion of its length that has been expanded into the tube hole **16** of tube sheet **18** imparts thermal stresses to the tube material in excess of the material's yield stress. These induced stresses cause the tube material to expand axially within the tube hole **16** such that, when the tube is cooled, its end will be contracted to an external diameter that is considerably less than the internal diameter of the tube hole whereupon the tube can be easily withdrawn from the hole.

While the described induction heating apparatus **10** is of a size and nature such that it can be easily manipulated by hand, the disclosed embodiment of the invention includes a drive mechanism **12**, the use of which insures movement of the heater within tube **14** at a uniform rate. The drive mechanism **12** includes a frame comprised of parallelly spaced cylindrical rods **102** fixedly mounted between front and rear end brackets **104** and **106** respectively. The front ends of the rods **102** are caused to extend a distance beyond the front bracket **104** and are sized and spaced so as to be received within the ends of tubes **14** mounted within tube sheet **18** adjacent the tube to be worked upon by the heating apparatus. Thus the rods **102** provide guides for the movement of the heating apparatus **10** into and out of the interior of the workpiece tube **14**.

The front end bracket **104** of the frame extends between and engages the spaced rods **102** and includes a depending flange portion **108** containing a slightly oversized opening **110** to guidingly pass the heater portion **22** of the apparatus **10**. The rear end bracket **106** is attached at the rear ends of members **102** and is adapted further to mount the drive assembly comprising a housing **112** including an electrically operated, constant speed motor **114** having a rotatable drive shaft **115** and pulley **116** that can be selectively engaged or disengaged to the drive shaft by means of clutching mechanism (not shown) operated by turnscrew **117**. A drive chain **118**, fixedly attached at one of its ends **120** to the pulley **116**, is adapted to be wound about the pulley with its free end **122** attached to a mounting bracket **124** on the upper end of a carrier **126** that connects the induction heater apparatus **10**. The carrier **126** comprises a body **128** mounting a pair of mutually spaced linear bearings **130** adapted to be received and ride along the members **102**. At its lower end the body **126** attaches, through a threaded stud **132**, a sleeve **134** having an elipsoidal exterior surface and lock nut **136**, the sleeve being adapted to retain a fastener **138** that threadedly attaches the adapter plug **40** and which possesses an opening **140** that conforms to the external surface of the sleeve **134** and thereby permits a degree of angular adjustment of apparatus **10** with respect to the carrier **126**.

When attached to the drive mechanism **12**, the induction heater apparatus **10** is operated as follows. With the carrier **126** retracted to its rearward most position, defined by the abutment of the linear bearings **130** against the rear end bracket **106**, the forward ends of the rods **102** are inserted into the interior of tubes **14** adjacent the tube selected to be heated. The leading end of the heating portion **22** of apparatus **10** can be simultaneously inserted into the selected tube. Thereafter, with the turnscrew **117** set so as to disengage the pulley **116** from the motor drive shaft **115**, the carrier **128** is manually slid along the rods **102** in the direction of the front end bracket **104** thereby setting the heater portion **22** of the apparatus **10** within the tube **14** a predetermined distance that conforms to the thickness of the tube sheet **18**. For this purpose an adjustable stop **142** may be provided extending between the rods **102** and having a releasable fastener **144** operative to permit adjustment of the length of travel of the carrier **128** along the rods **102**. Thereafter the turnscrew **117** is operated to lock the pulley **116** to drive shaft **115**, and the motor **114** and power source **64** simultaneously actuated in order to energize the coil **70** and at the same time slowly withdraw the heating portion **22** of the apparatus **10** from the tube **14** by the winding of the chain **118** about the pulley. At the same time power source **64** is actuated cooling liquid is admitted to the apparatus by the actuation of an electrically operated valve (not shown) that may be provided in the inlet conduit **66** between the nipple **58** and source of cooling liquid. Electric current and cooling liquid flow are continued until such time as the carrier **128** has been retracted to its rearward most position against the rear bracket **106** whereupon the flow of electric current and cooling liquid can be terminated.

The present induction heating apparatus has proven extremely satisfactory in heating small diameter tubes over relatively long axial lengths which could otherwise not be operated on any known high frequency induction coils. For this reason it has proven extremely useful in the disassembly of tubes from assembled relation in tube sheets, although it should be understood that the herein disclosed apparatus is equally applicable in other applications where it is desired to employ a induction heater.

It will be appreciated that modifications and illustrations of the invention will occur to others upon reading of this specification and it is intended that all such modifications and alterations be included insofar as they are within the scope of the appended claims.

What is claimed is:

1. Induction heating apparatus for use in heating the interior of small diameter holes in elongated metallic workpieces, said apparatus including a heating portion comprising:

(a) an elongated hollow casing having a closed leading end adapted for insertion into the hole to be heated;

(b) concentrically related tubes formed of electrically conductive material disposed within said casing;

(c) spacer means formed of electrically non-conductive material interposed between adjacent tubes of said tubes to define concentrically disposed first and second fluid passages communicating with the interior of said casing for circulating cooling liquid therethrough;

(d) a solid wire inductor coil helically wound about one tube of said tubes and being connected at its opposite ends between said adjacent tubes;

(e) means connecting said adjacent tubes to a source of high frequency electric current; and

(f) means connecting said fluid passages to a source of cooling liquid.

2. Apparatus as recited in claim **1** including a hollow cylindrical bushing formed of magnetic metal interposed between said inductor coil and said one tube.

3. Apparatus as recited in claim **1** wherein said concentrically related tubes are concentrically spaced from the wall of said casing defining a third fluid passage and the outer tube of said tubes contains radial openings establishing fluid communication between said third fluid passage and one of said other passages.

4. Apparatus as recited in claim **3** wherein said radial openings are disposed adjacent the leading end of said outer tube and a substantial portion of said third fluid passage rearwardly of said openings is a region of fluid stagnation.

5. Apparatus as recited in claim **1** including a body portion mounting said heating portion, said body portion comprising:

(a) a pair of longitudinally aligned front and rear body members formed of electrically conductive material;

(b) an electrically non-conductive spacer interposed between said body members;

(c) means forming concentric bores in said front body member for mounting said casing and the outer tube of said tubes;

(d) axially aligned openings penetrating said front and rear body members and said spacer, the inner tube of said tubes extending through said aligned openings for mounting in said rear body member;

(e) a radially disposed fluid conducting nipple formed of electrically conductive material penetrating each of said body members to establish fluid communication with the respective fluid passages defined by said concentric tubes;

(f) means for circulating cooling liquid through said nipples; and

(g) means connecting said nipples to a source of high frequency electric current.

6. Apparatus as recited in claim 5 including a hollow cylindrical bushing formed of magnetic metal interposed between said inductor coil and said one tube.

7. Apparatus as recited in claim 5 wherein said concentrically related tubes are concentrically spaced from the wall of said casing defining a third fluid passage and the outer tube of said tubes contains radial openings establishing fluid communication between said third fluid passage and one of said other passages.

8. Apparatus as recited in claim 7 wherein said radial openings are disposed adjacent the leading end of said outer tube and a substantial portion of said third fluid passage rearwardly of said openings is a region of fluid stagnation.

References Cited

UNITED STATES PATENTS

2,556,236	6/1951	Strickland	219—10.79 X
2,759,085	8/1956	Van Speren	219—10.49 X

JOSEPH V. TRUHE, Primary Examiner

L. H. BENDER, Assistant Examiner

U.S. Cl. X.R.

219—10.51, 10.79