Dec. 15, 1964 W. D. HALL 3,161,737

INCLINATION RESPONSIVE ELECTRICAL SWITCH

Filed Jan. 18, 1960

FIG. 1.

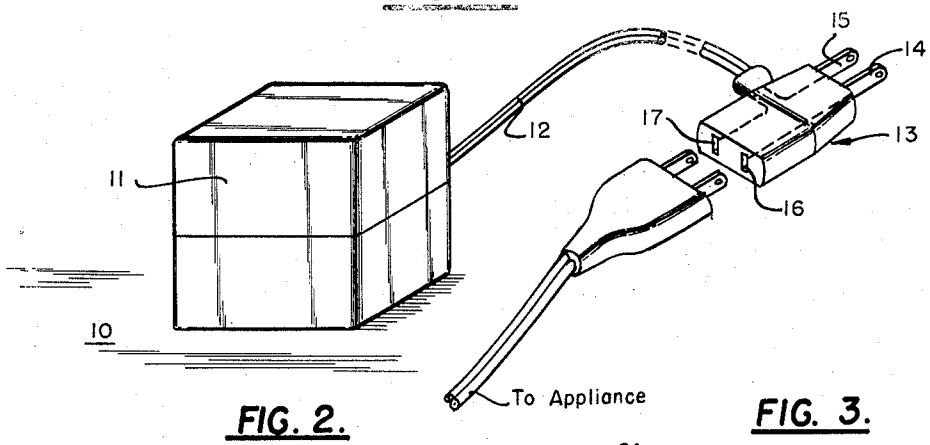

FIG. 2.

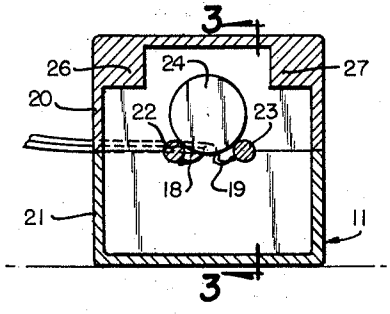

FIG. 3.

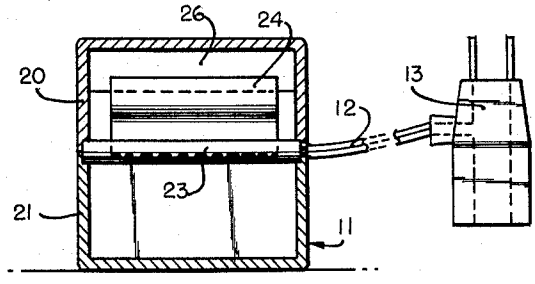

FIG. 4.

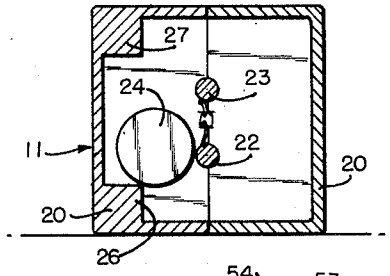

FIG. 5.

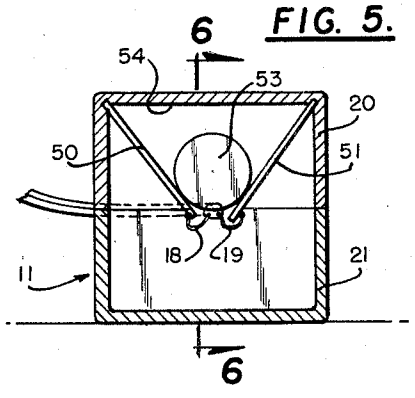

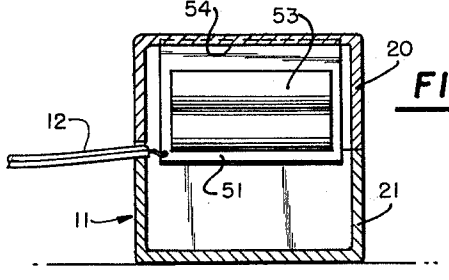

FIG. 6.

INVENTOR

William D. Hall

BY Moore & Hall

ATTORNEYS

United States Patent Office 3,161,737 Patented Dec. 15, 1964

3,161,737
INCLINATION RESPONSIVE ELECTRICAL SWITCH

William D. Hall, Montgomery County, Md.
(5112 Westpath Court, Washington 16, D.C.)

Filed Jan. 18, 1960, Ser. No. 2,917
11 Claims. (Cl. 200—61.52)

This invention relates to manually operable electrical switches, and more particularly to the type of switch in which a casing has plural sides on which it may rest and the switch is turned on or off, to control a remote appliance, by tipping the switch from one of said sides to another. Such switches are shown in my prior copending applications Serial No. 833,222, filed August 12, 1959, now abandoned, entitled "Manually Operated Mercury Switch"; Serial No. 860,251, filed December 16, 1959, now abandoned, entitled "Control for Electric Blankets"; and Serial No. 862,602, filed December 29, 1959, entitled "Manually Operable Electric Switch"; and also shown in the prior copending application of Leo G. Dumire and George G. Edlen, Serial No. 862,601, filed December 29, 1959, now abandoned, entitled "Electrical Switch," which has been assigned to me.

This invention has as one object the provision of a switch of the class above described which is lower in cost than those heretofore disclosed.

Another object of the invention is the provision of a switch of the class above described which will respond to a smaller angle of tipping than the switches previously described.

Other objects of the invention will appear as this description proceeds.

In carrying out the foregoing objects I provide a casing of any suitable shape, for example a cube. The cube rests on a table and may be tipped from one side to another to turn the switch on or off. Inside the cube there are two parallel conducting elements which constitute two terminals of the switch element. These two elements connect respectively to the two wires of a line cord that terminates in a series plug. As a result the two elements are in series with the remote appliance to be controlled. A metal rod is seated on the two elements in such a manner as to rock off of one of the elements when the switch is tipped. The inner wall of the casing so confines the large rod that it rocks between on and off positions when tipped between two positions respectively.

In the drawings:

FIGURE 1 is a perspective view of the outside of a switch of the class described, the switch resting on a table or other flat surface.

FIGURE 2 is a cross-sectional view of the device, taken along line 2—2 of FIGURE 3.

FIGURE 3 is a cross-sectional view of the device, taken along line 3—3 of FIGURE 2.

FIGURE 4 is a further cross-sectional view similar to that of FIGURE 2 except the switch has been tipped to the off position.

FIGURE 5 is a cross-sectional view of a modified form of the invention.

FIGURE 6 is a cross-sectional view taken along line 6—6 of FIGURE 5.

In the drawings, the switch is resting on a table or other flat surface 10. The switch generally comprises a casing 11, and a line cord 12 terminating in a series plug 13. As shown more fully in FIGURE 3, the standard series plug 13 has two prongs 14 and 15 which may be plugged in a conventional wall outlet. At the rear end of plug 13 is a socket composed of socket elements 16 and 17 which may receive a standard plug of any electrical appliance. The prong 14 is connected directly to

socket element 16 and the prong 15 is connected to wire 18 of line cord 12. Socket element 17 is connected to wire 19 of that line cord.

The Bakelite casing 11 is composed of two halves 20 and 21 which mate together and in doing so provide four cavities for receiving the ends of the two parallel small rods 22 and 23. These rods are respectively connected to wires 18 and 19.

Resting on the small rods 22 and 23 is a large rod 24. When the casing is in the upright position of FIGURE 2 the large rod 24 electrically connects the two smaller ones thus closing the circuit to the remote appliance. However, when the casing 11 is tipped to another side, for example as shown in FIGURE 4, the large rod 24 rolls off of small rods 22 and 23 and opens the circuit.

To confine the large rod 24 to proper bounds so that it will return to the position shown in FIGURE 2 when the casing 11 is tipped back from the position of FIGURE 4 to that of FIGURE 2, the casing 11 extends inward at 26 and 27 thus confining the large rod to the space defined by 22, 23, 26 and 27. The three rods 22, 23 and 24 may be composed of suitable conducting material, for example brass.

In FIGURES 5 and 6, a modified form of the invention, two inclined brass plates 50 and 51 are rigidly supported in the casing and support the brass rod 53. The plates 50 and 51 connect respectively to wires 18 and 19 of line cord 12 the same as in FIGURES 1 to 4.

When the casing 11 of FIGURES 5 and 6 is tipped to another side the rod 53 rolls from the position shown where it touches both plates to a position where it rests on only one plate. The top inside wall 54 of the casing confines the rod 53 to a very limited movement. This is desirable to prevent internal injuries when the device is jarred during shipping. Moreover, this limitation on movement is desirable to reduce the noise involved when the switch is tipped from one position to another.

I claim to have invented:

1. An electrical switch comprising a rotatable casing of insulating material, a pair of elongated conducting elements supported within said casing in parallel spaced relation to each other and adjacent the inner side wall of the casing, a rod resting on said conducting elements and supported between the elements when the casing is in a first inclination, said rod being freely movable under force of gravity when the vertical position of one of the elements with reference to the other is changed, one of said elements being positioned adjacent the inside wall of the casing and so close to said inside wall as to prevent passage of the rod between such element and the inside wall of the casing, said casing being adapted to be moved in a plane transverse to the axis of the rod to thus cause the rod to roll away from the position where it contacts both said elements and into a position where it rests against the inside wall of the casing and is supported by said one of said elements as well as by the inside wall of the casing.

2. An electrical switch as defined in claim 1 in which said elements are plates, the lower ends of which are parallel and the plates extending away from each other as the distance from the lower end increases, the upper ends of the plates terminating adjacent an inner wall of the casing, said rod resting in the cavity defined by the plates and said wall and being confined by said plates and wall.

3. An electrical switch as defined in claim 1 in which said elements comprise parallel conducting surfaces on which said rod may rest, the inner wall of said casing being recessed to form an elongated cavity above said elements, each element being positioned closer to its respective end of the recessed portion of the cavity than the diameter of said rod, whereby the elements together with the walls of the cavity confine the rod.

4. An electrical switch comprising a pair of parallel electrical conducting elements, a rod of conducting material of larger diameter than the space between said elements and resting on and extending between the elements with its axis parallel to the elements, said rod being freely movable under force of gravity when the vertical position of one of the elements with reference to the other is changed, supporting means for said elements operable to move them to an inclined position in which one of them is sufficiently higher than the other that the rod will roll away from the said one element and break contact therewith, and stop means mechanically movable with said supporting means positioned in the path of said rod as it moves away from said one element for limiting the amount of movement of the rod so that when the elements are moved to lower the said one element with reference to the other the rod will roll back to a position where it rests on and extends between said elements, the stop means being positioned closer to the rod than the length of the rod in all directions in which the rod may move.

5. An electrical switch as defined in claim 4 in which said supporting means comprises an insulating casing surrounding the elements and the rod and said stop means comprises a projection from the inside wall of said casing.

6. An electrical switch as defined in claim 5 in which said casing has side walls in planes parallel to the axis of the rod, said side walls being adapted to rest on a flat surface and the switch being operable between on and off positions by moving the casing from one to another side wall.

7. An electrical switch comprising a casing adapted to rest on a table or other flat surface in first and second resting positions respectively, said casing having table-contacting portions on which the casing rests in said positions respectively, a pair of parallel conducting elements supported by and within said casing the upper surfaces of which are in substantially the same horizontal plane when the casing is in the first of said positions, a rod of electrical conducting material of larger diameter than the distance between said elements and resting on and extending between said elements, said rod being freely movable under force of gravity when the vertical position of one of the elements with reference to the other is changed, said first and second positions having a sufficiently wide angle between them that when the casing is moved from its first to its second positions the rod will roll away from and break contact with one of said elements, and stop means carried by the casing for limiting the amount the rod rolls away from said one element when the casing is moved from its first to its second position so that the rod will roll back into contact with said one element when the casing is moved from its second to its first position the stop means being positioned closer to the rod than the length of the rod in all directions in which the rod may move.

8. An electrical switch comprising a rod, supporting means on which the rod rests comprising spaced electrical contacts which are bridged by the rod when it is carried by said contacts, said rod being freely movable under the force of gravity when the vertical position of one of said contacts with reference to the other is changed, means operable to move said supporting means in a plane perpendicular to that of the rod with a sufficiently rotary motion that the rod moves away from at least one of said contacts, and stop means mechanically attached to and movable with said supporting means for limiting the motion of said rod so that when the second-mentioned means is returned to its original position the rod will engage both said contacts, the stop means being positioned closer to the rod than the length of the rod in all directions in which the rod may move.

9. An electrical switch comprising a rod, supporting means on which the rod rests comprising spaced electrical contacts which are bridged by the rod in the "on" position of the switch, said rod being freely movable under the force of gravity when the vertical position of one of said contacts with reference to the other is changed, a rotatable casing carrying said supporting means and operable to be inclined so that the rod will move away from at least one of said contacts, and stop means within the casing and carried thereby for confining the rod to a limited part of the casing adjacent said supporting means so that when the casing is returned to its original inclination the rod will return to a position contacting both said contacts, the stop means being positioned closer to the rod than the length of the rod in all directions in which the rod may move so that the rod is confined to positions in which it is substantially parallel to said elements.

10. An electrical switch as defined by claim 9 in which the casing has plural side walls and is inclined by moving it from a resting position on one of them to a resting position on another of them.

11. An electrical switch as defined in claim 10 in which the stop means is a projection on the inner wall of the casing.

References Cited in the file of this patent

UNITED STATES PATENTS

1,971,585	Soreng	Aug. 28, 1934
1,983,645	Soreng	Dec. 11, 1934
2,273,245	Ander	Feb. 17, 1942
2,480,827	Armstrong	Sept. 6, 1949
2,754,386	Gaylord	July 10, 1956
2,786,654	Greer	Mar. 26, 1957
2,805,296	Newell	Sept. 3, 1957
2,927,185	Bonnaire	Mar. 1, 1960

FOREIGN PATENTS

378,104	France	Sept. 25, 1907
262,093	Switzerland	Sept. 16, 1949