April 4, 1967 R. A. GENTRY 3,312,373

CONTAINER WITH COMBINATION HANDLE AND LID MEANS

Filed April 14, 1965

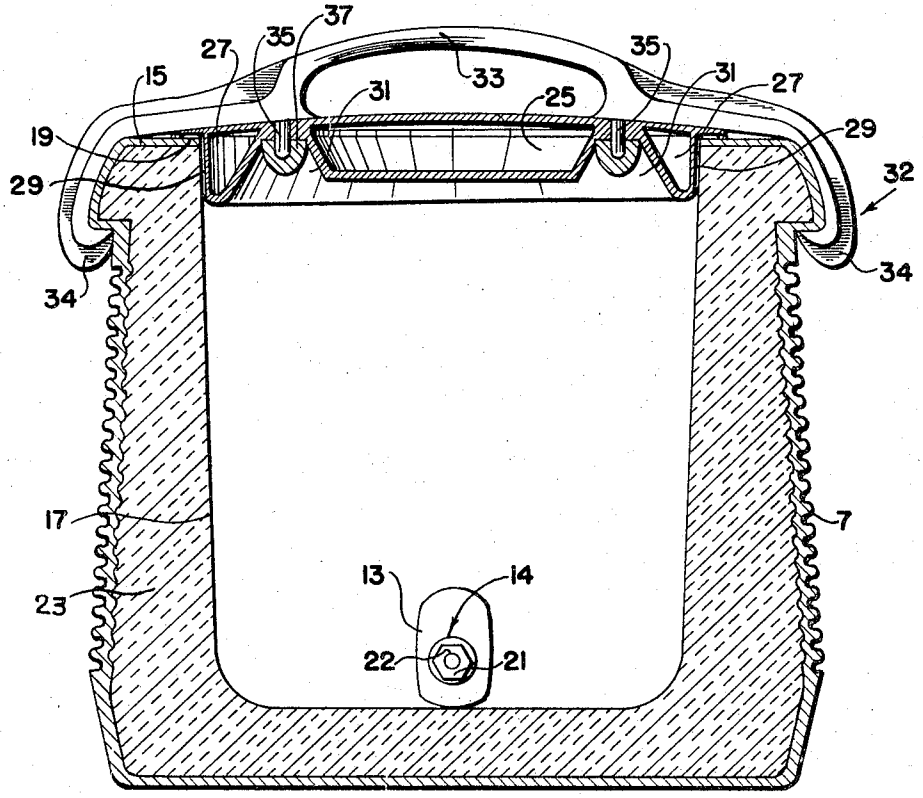

FIG. 3

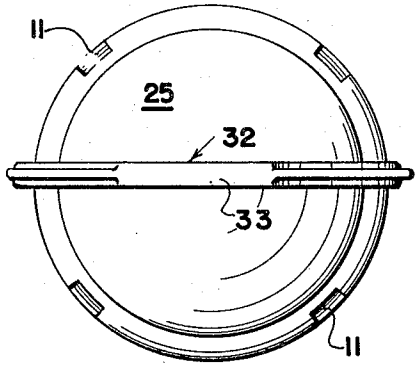

FIG. 2

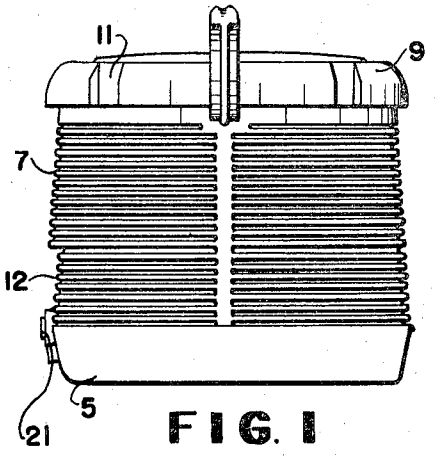

FIG. 1

INVENTOR.
RICHARD A. GENTRY

BY John H. Widdowson

ATTORNEY

United States Patent Office 3,312,373 Patented Apr. 4, 1967

3,312,373

CONTAINER WITH COMBINATION HANDLE AND LID MEANS

Richard A. Gentry, P.O. Box 702, Winfield, Kans. 67156

Filed Apr. 14, 1965, Ser. No. 448,044
5 Claims. (Cl. 222—131)

This invention relates to a container with a handle and lid means for closing, lifting and carrying same. More particularly, the invention relates to an insulated vessel with a faucet provided for holding liquid fluids at a low rate of temperature change, and a handle and lid combination whereby the handle has means of engaging the insulated vessel for closing, lifting and carrying same.

Various types of containers to hold liquid fluids are known in the prior art. Some of the prior art containers have small necks or openings at the top. This creates difficulties when ice or some other cooling agent is to be introduced into the container for the purpose of cooling the liquid fluids therein. Relatively large articles cannot be introduced into the container for cooling same or maintaining same cool, such as cans or bottles of beverages. Other containers reflected in the prior art have lid or plug means which cannot be firmly locked or secured to the container. Still other containers of the prior art have independent bails or handles which are unsatisfactory when the container is to be transported, packed or stored. Another objection to containers reflected in the prior art are those having handle means requiring both hands for carrying same. Containers of the prior art made of metal with independent carrying means, have sharp edges which constitute a danger to the clothing and the person of the user, and are subject to deterioration by rusting, denting, and breaking.

The container of this invention has a housing, preferably with an inner liner therein, a faucet near the bottom, and insulating material between the outer housing and inner liner. It has a removable lid with a handle connected. Means at the end portions of the handle are employed to rotatably and lockingly engage the lid and outer housing for closing, lifting and carrying said container.

In accordance with the present invention, a new type of container for holding liquid fluids has been provided which overcomes the disadvantages of the containers or coolers of the prior art. More particularly, a new type of container for holding liquid fluids has been provided having a large opening at the top thereof which facilitates the filling of the container with liquid fluids as well as solids, such as ice, cans or bottles of beverages, and the like. Also, the container of the invention provides new combination means of closing the container, locking the lid firmly in place and carrying same which overcomes the disadvantages in the prior art of having separate closing devices for the container and carrying means. The container of the invention overcomes a disadvantage of the prior art containers, particularly those containers made of metal in that the container with handle lid means of the invention is made of a plastic material which will not rust, dent, or be easily damaged. A further advantage of the plastic construction of the invention is that the container has no sharp projecting points or edges which can be injurious to persons using such a container.

It is an object of this invention to provide a new type of container for holding liquid fluids.

It is a further object of this invention to provide a new type container for holding liquid fluids with a combination lid and handle means.

Another object of this invention is to provide a new insulated container for liquid fluids with combination lid

and handle means that closes the opening to the container and rotatably engages the lid and handle firmly to the vessel.

Still another object of this invention is to provide a new container for holding liquid fluids that is not easily subject to deterioration and provides maximum safety from injury to those using same.

Yet another object of this invention is to provide a new type container for holding liquid fluids having a large opening at the top.

Various other objects, advantages, and features of the invention will become apparent to those skilled in the art from reading this disclosure.

Drawings accompany and are a part of this disclosure. These drawings depict preferred specific embodiments of the container with combination lid and handle means of the invention, and it is to be understood that these drawings are not to unduly limit the scope of the invention. In the drawings,

FIG. 1 is an elevational view of a preferred specific embodiment of the container of the invention showing the handle and lid means locked in place.

FIG. 2 is a top plan view of same again showing the handle and lid locked in place.

FIG. 3 is an elongated partial cross sectional elevational view of same, showing the handle in lid locking and carrying position.

In the following is a discussion and description of the invention made with reference to the drawings whereon the same reference numerals are used to indicate the same or similar parts and/or structure. The discussion and description is of preferred specific embodiments of the new container with combination handle and lid means of the invention, and it is to be understood that the discussion and description is not to unduly limit the scope of the invention.

Referring now to the drawings in detail, the preferred construction of the container with combination handle and lid means is an outer housing **5** having a plurality of substantially circumferential corrugations **7**, an annular flange **9** around the top, traversed by four equally spaced grooves **11**, an indentation **12** for a faucet with a faucet hole therein and an inwardly projecting circumferential flange **15** at the top. The housing part can be made of any suitable material out of such as wood, metal and/or plastic material, reinforced with such a glass fibers or not, or the like, but preferably of a thermoplastic resin, and it has been found that polyethylene, a polyolefin, produces a very satisfactory housing which is easy to form and stands up excellently in use. Other polyolefins, such as polypropylene can be used, if desired. A polyolefin which has been found to produce a very satisfactory part is a high density polyethylene manufactured by the Phillips Petroleum Company of Bartlesville, Oklahoma, and marketed under the trademark Marlex. The outer housing is integrally formed preferably by molding such as a blow molding process, or by any other suitable molding method.

An inner tapered liner **17** is formed preferably of the same material, and in like manner as the outer housing **5**. The inner liner preferably is slightly tapered inwardly from top to bottom at any suitable angle, desirably at an angle of from 1 to 3 degrees, and an angle of approximately 2 degrees has been found very advantageous. The inner liner contains an indentation **13** with a faucet hole therein at point **14** with a rubber gasket of grommet, or the like, preferably positioned in the faucet hole of the inner liner. The inner liner **17** is desirably of such dimension that when it is placed inside of the outer housing **5**, the inwardly projection flange **15** of the outer housing **5** touches the inner liner at all points. An outwardly

projecting flange **19** is at the top of the inner liner **17** and when in place rests upon the inward flange **15** of the outer housing **5**. A faucet **21** formed of a suitable material, such as metal or plastic, or the like, preferably of plastic material passes through suitable mounting holes in the outer housing **5**, inner liner **17**, and insulating material, and is secured from the inside of the inner liner **17** by a hexagonal nut **22** formed of a suitable material, such as metal or plastic or the like, preferably of plastic. The faucet **21** and nut **22** effectively hold the inner liner **17** in the outer housing **5**. The inner liner **17** is not installed permanently or with any kind of adhesive so that it and the faucet **21** are easily removable.

Foamable heat insulating material is introduced into the space defined by the outer housing **5** and inner liner **17** and foamed in situ to produce foamed insulation **23**. The insulating material **23** can be any suitable material such as fiber glass, batting, asbestos, etc., preferably a suitable foaming material, more preferably a thermosetting plastic material, such as polyurethane foam, and preferably a rigid polyurethane made from polyethers. It has been found that a polyurethane foam that forms a very satisfactory insulation is supplied by the Armstrong Cork Company and marketed by them under the trademark Expandofoam. Prior to introducing the liquid polyurethane foam material into the foaming space provided, the outer housing **5** on its inside preferably is oxidized so that the insulating foam material bonds or adhere when foamed to the inside of the outer housing **5**.

The inside of the outer jacket or housing **5** is preferably oxidized in any suitable manner such as by treating with an oxidizing material, for example, chromic acid, nitric acid, and the like, most preferably the surface is polarized or oxidized with a flame rich in oxygen. This provides for adhesion or adhering the insulating foam to the surface of the jacket or outer housing **5** foamed in situ.

A very satisfactory method of forming insulation **23** is by placing a tapered plug (not shown), the outside diameter of which is the same as the outside diameter of the inner liner **17** into outer housing **5** after pouring the liquid polyurethane foam material into the bottom of the housing, whereupon the foam material rises and fills the annular space between the plug and the outer housing **5** to form insulation **23**. The tapered molding plug is then removed and liner **17** inserted.

A removable lid **25** provides closure for the vessel. This lid can be formed of any suitable material, out of such as wood, metal and/or plastic material, or the like, preferably of a thermoplastic material such as polyethylene which is one of the desirable polyolefins, polypropylene, etc. having been found suitable. The lid can be formed by any suitable means, but preferably thermo forming by a blow molding process. The lid has a slightly convex outside portion, which portion has a diameter greater than the diameter of the flange **19** of the inner liner **17** so that when the lid is engaged to the vessel, the convex top or outside portion substantially covers the top of the flange **15** of the outer housing **5**. The inside portion of the lid has a round portion **27** with substantially the same diameter as the inside diameter of the inner liner **17** so that the vessel is effectively sealed when the said lid is placed therein. On the outside of the round portion **27** are four vertical grooves **29** which are desirably provided to allow the escape of air or the like from the vessel when the lid is placed thereon and down inside the inner liner **17**. The inner walls of the inside portion are tapered to form a circular flat inner surface of the lid, and spaced in line with the center of the flat surface and spaced equidistant from the circumference of the flat surface are two spaced recesses **31** with uniformly tapered walls forming an apex through which a hole extends through the lid. Rigidly mounted on the lid is a handle **32**. This part can be made of any suitable material out of such as wood, metal and/or plastic material, or the like, preferably of a thermoplastic resin, and it has been found that ABS produces a very satisfactory part which is easy to form and which stands up excellently in use. ABS is an acrylonitrile-butadiene-styrene terpolymer. This part can be formed by any suitable means, preferably by injection molding. A terpolymer which has been found to produce a very satisfactory part is marketed by the Borg-Warner Company of Washington, Va., under the trademark Marbon. The formed handle **32** has an arched portion **33** in the center to provide for carrying and rotating. The underneath surfaces of the handle **32** are formed so as to conform to the curvature of the lid **25** upon which it is secured. At the ends of the handle are depending hooks **34**, which are formed so as to when mounting lid **25** pass through the grooves **11** of the outer housing **5**, and when rotated engage the underneath side of the outer housing flange **9**. Two bosses **35** are integrally formed on the underneath side of the handle **32**, and spaced so as to project through the holes at the apex of the spaced recesses **31**. The handle is secured to the lid by rigidly mounting a securing button **37** on the projecting portion of each boss **35**. This securing button can be made of any suitable material such as wood, metal and/or plastic material, or the like, but preferably of ABS by injection molding, supra. Buttons **37** are connected to bosses **35** by any suitable means such as threadedly mounting the buttons in the bosses, by adhesives, or the like, but preferably by a solvent adhesive where ABS in a solvent material is placed on the projecting boss **35** and in the recess of the button **37**, the securing button **37** being placed immediately on boss **35** allowing the ABS to integrally fuse as the solvent evaporates. Also, heat sealing the button on the boss can be accomplished. The present invention thus embodies a combination handle and lid means which is easily rotatably lockable to the vessel and provides closure and carrying means of the container.

The foregoing discussion and description has been made in connection with preferred specific embodiments of the combination handle and lid means for a container of the invention. However, it is to be undestood that the discussion and description is only intended to illustrate and teach those skilled in the art how to practice the invention and such is not to unduly limit the scope of the invention which is defined in the claims set forth hereinafter.

I claim:

1. A container with combination handle and lid means comprising, a vessel to hold liquid fluids at a low rate of temperature change having (1) an outer housing integrally formed of plastic material, having a plurality of substantially circumferential corrugations, an annular flange extended laterally from and around the outside of the top thereof, said flange being traversed by four equally spaced vertical grooves, and a hole formed in the center of an indentation near the bottom of said outer housing to accommodate a faucet therein and an inwardly projecting annular flange at the top thereof, (2) an inner tapered liner integrally formed of plastic material having a diameter slightly greater at the top than at the bottom, an indentation near the bottom thereof having a faucet hole with a rubber faucet gasket therein, and an outwardly projecting flange at the top and said inner liner placed in the said outer housing so that the inward flange on said outer housing touches said inner liner at the top thereof with the outward flange of said inner liner resting upon the said inwardly projecting flange of the outer housing, (3) a faucet formed of plastic material having a nut made of plastic material screwed onto same from the inside of said inner liner to mount said faucet in said container, (4) foamed heat insulating material in the space between said outer housing and inner liner and adhered to same, (5) a removable hollow lid formed of plastic material having a slightly convex outside portion, a diameter greater than the diameter of said flange of said inner liner, a round inside portion of the same outside diameter as the inside diameter of said inner liner, with four vertical

grooves equally spaced around the outside thereof, said inside portion being circularly and concentrically recessed on the inside and having inwardly tapered walls extending to a circular flat inner surface, said inner surface having two spaced recesses with uniformly tapered walls and in line with the center of the flat surface and spaced equidistant from the circumference of said flat surface, and a hole through the lid at the apex of each spaced recess and (6) an integrally formed handle of plastic material having an arched portion in the center thereof with surfaces on the underneath side of said handle conforming to the curvature of the outside of the said lid with a depending portion at each end formed to pass through the said grooves in said outer flange of said outer housing, and an inwardly facing hook portion at each lower end of said depending portions of said handle adapted to engage the lower portion of said outer flange of said outer housing, said hook portions to simultaneously pass through two diametrically opposed ones of said grooves and on rotation of said handle engage the under surface of said annular flange, and having two bosses integrally formed on the underneath surface and projecting through said holes in said lid, each boss secured to said lid by a button formed of plastic material and rigidly mounted on said bosses in said spaced recesses in said inside portion of said lid, said handle and lid means lockable to said vessel by rotative movement whereby the ends of the handle engage the outer flange of the outer housing of said vessel to provide for lifting and carrying same.

2. A container with combination handle and lid means comprising, a vessel to hold liquid fluids at a low rate of temperature change having, (1) an outer housing formed of plastic material and having a laterally extended annular flange around the outside of the top thereof, said flange being traversed by four equally spaced vertical grooves, and to an inwardly projecting annular flange at the top thereof, (2) an inner tapered liner formed of plastic material and having an outwardly projecting flange at the top of said liner being in the said outer housing, (3) insulating material in the space between said outer housing and inner liner and adhered to same, (4) a removable hollow lid formed of plastic material and having a slightly convex outside portion, a diameter greater than the outer diameter of the said flange of the said inner liner, a round inside portion of the said lid having an outside diameter the same as the inside diameter of the said inner liner with four vertical grooves equally spaced around the outside thereof, a circular flat inner surface having two spaced recesses, and a hole through the lid at the apex of each of said spaced recesses, and (5) a handle of plastic material having an arched portion in the center, a depending portion at each end formed to pass through opposite ones of said grooves in said outer flange of said outer housing, an inwardly facing hooked portion at each end of said handle adapted to engage the lower portion of said outer flange of said outer housing, said hook portions spaced apart a distance so as to pass through diametrically opposed pairs of said grooves and engage the undersurface of said outer flange on rotation of said handle, and two bosses formed on the underneath surface and projecting through said holes in said lid, and (6) two buttons formed of plastic material, and means to secure each of said buttons to each of said bosses, said handle and lid means lockable to said vessel by rotative movement whereby the ends of the handle engage the outer flange of the outer housing of said vessel to provide for lifting and carrying same.

3. A container with combination handle and lid means comprising, a vessel to hold liquid fluid at a low rate of temperature change having (1) an outer housing having

an upper, laterally extended annular flange traversed by at least two equally spaced grooves, and an inwardly projecting annular flange at the top, (2) an inner liner having an outwardly projecting flange at the top, and positioned in the said outer housing, (3) a lid having an inside portion with a vertical groove on the outside thereof, two spaced recesses in the inside surface and a hole through the lid in each recess, (4) a handle having an arched portion and a downwardly depending portion at opposite ends of said arched portion with inwardly facing hooks at the lower ends thereof adapted to engage the lower surface of said outer annular flange of the said outer housing, and having two bosses projecting through said holes in said lid, and (5) button means to secure said handle to said lid, said handle and lid means lockable to said vessel by rotative movement whereby the ends of the handle engage the said outer flange of the outer housing of said vessel to provide for closing, lifting and carrying same.

4. A vessel to hold liquid fluids comprising, an outer housing having an outwardly extended annular flange thereabout with transversely extended spaced grooves, an inner liner in said outer housing, a removable lid, a handle attached to said lid, said handle having downwardly depending hooks at the outer ends thereon to engage the undersurface of said annular flange on said outer housing, said lid lockable to said vessel by rotative movement by engagement of said handle hooks extended through at least two of said grooves to engage the undersurface of said outer flange of said outer housing to provide for closing, lifting and carrying said vessel.

5. A container with combination handle and lid means comprising, (1) an outer housing having an upper, laterally extended annular flange traversed by at least two equally spaced grooves, (2) an inner liner having an outwardly projecting flange at the top end and positioned in said outer housing, (3) a lid mountable within said inner lining to engage said outwardly projecting flange thereof, (4) a handle having an arched mid portion and downwardly depending spaced end portions with inwardly facing hooks thereon, (5) means connecting said handle to said lid, having said mid portion spaced from said lid for grasping and carrying purposes, and (6) said handle and lid lockable to said outer housing on extension of said downwardly depending hooks transversely of said grooves and rotation thereof whereby the lower ends of said hooks engage the undersurface of said outer flange of said outer housing to provide for closing, lifting, and carrying of the same.

References Cited by the Examiner

UNITED STATES PATENTS

257,641	5/1882	Beebe	220—40 X
274,745	3/1883	Evans	220—40
298,140	5/1884	Welling	222—131
475,135	5/1892	Molt.	
1,108,765	8/1914	Lawless.	
1,673,007	6/1928	Kaiser	222—130
2,080,923	5/1937	Lassen	222—131
2,768,851	10/1956	Gifford	220—55.7 X
2,879,914	3/1959	Fleckenstein	220—40
3,070,253	12/1962	Brown	220—9
3,160,334	12/1964	Howe	222—565 X
3,240,029	3/1966	Wurtz.	

FOREIGN PATENTS

2,944	2/1887	Great Britain.
986,769	3/1965	Great Britain.

RAPHAEL M. LUPO, *Primary Examiner.*