March 20, 1934. A. HUND 1,951,416

ELECTRICAL AMPLIFYING SYSTEM

Filed Jan. 4, 1932 2 Sheets-Sheet 1

Fig. 1

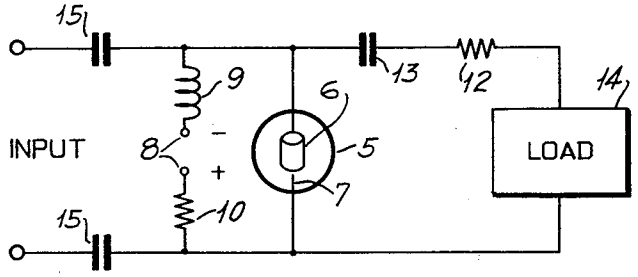

Fig. 2

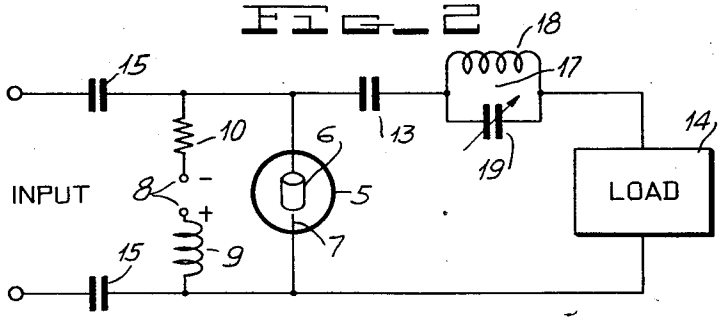

Fig. 3

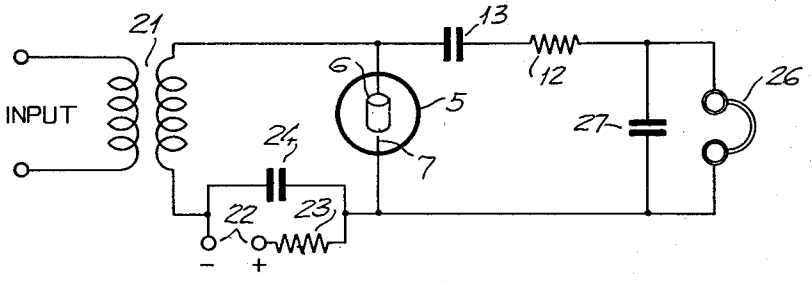

Fig. 4

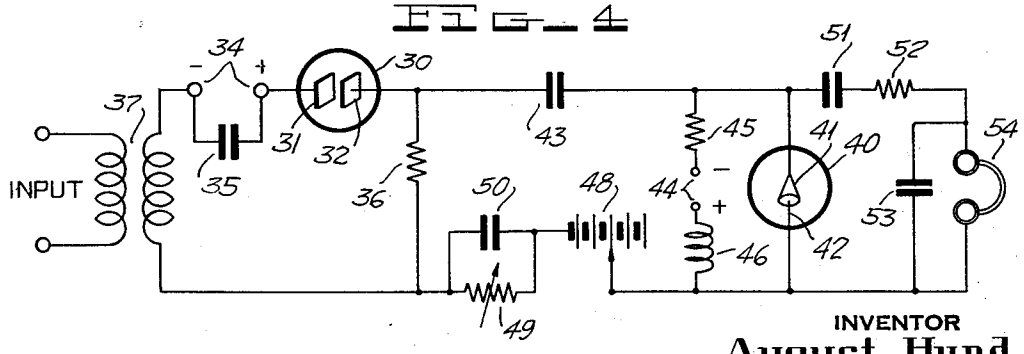

INVENTOR
August Hund
BY
Wm. J. Herdman
ATTORNEY

March 20, 1934. A. HUND 1,951,416

ELECTRICAL AMPLIFYING SYSTEM

Filed Jan. 4, 1932 2 Sheets-Sheet 2

Fig. 5

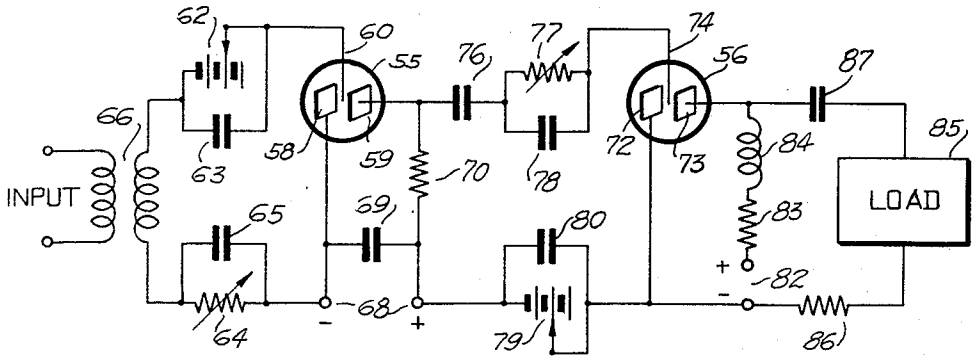

Fig. 6

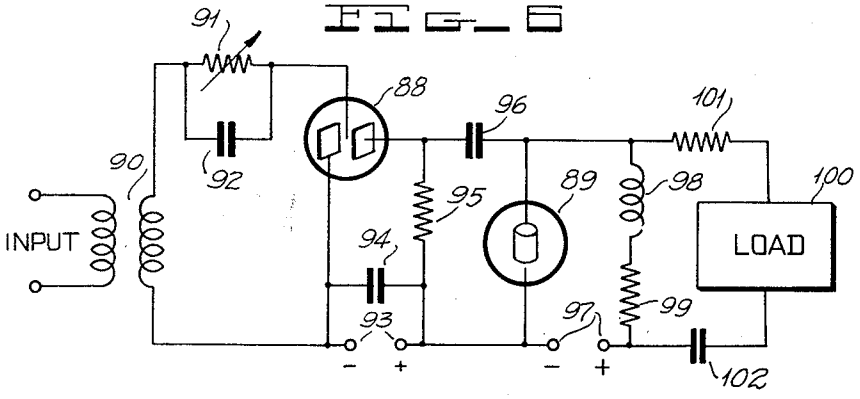

Fig. 7

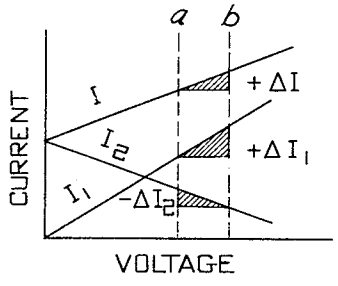

Fig. 8

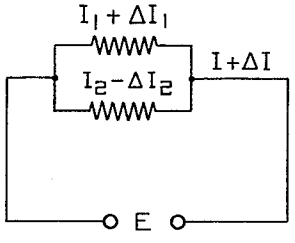

INVENTOR
August Hund
BY
Wm. J. Herdman
ATTORNEY

Patented Mar. 20, 1934

1,951,416

UNITED STATES PATENT OFFICE

1,951,416

ELECTRICAL AMPLIFYING SYSTEM

August Hund, West Orange, N. J., assignor to Wired Radio, Inc., New York, N. Y., a corporation of Delaware

Application January 4, 1932, Serial No. 584,600

10 Claims. (Cl. 179—171)

This invention relates to electrical amplifying systems and particularly to circuits for such systems employing multi-stage glow discharge devices having cold electrodes.

The object of this invention is to efficiently amplify electrical voltages and currents with fidelity.

Another object of the invention is to produce amplification of electrical potentials and currents by the use of glow discharge devices having negative resistance characteristics.

A further object of the invention is to amplify signals in plural stages employing glow discharge devices some of which operate as voltage amplifiers and others as current or power amplifiers.

In my copending application, Ser. No. 573,076, filed November 5, 1931, electrical amplifiers using cold electrode glow discharge tubes are disclosed. These tubes have been described in this application as those in which the ionization of molecules of gas remaining in a partially evacuated envelope produce a glow, such tubes having either a positive resistance characteristic or a resistance characteristic which is negative, in accordance with the construction of the electrodes within the tube envelope.

In brief, it has been found that glow discharge tubes of the above types may be constructed to provide a negative resistance characteristic over a wide range of voltages, these tubes being sufficiently stable to enable their use as voltage amplifiers. This construction is one wherein the cathode is preferably cup shaped and in which the glow is produced, the other electrode being substantially a point. By maintaining the glow within the cathode, the tube will have a negative resistance characteristic. It is to be understood, however, that this is not the sole method of constructing a glow discharge tube having such a negative characteristic.

The disclosure in the above mentioned copending application is directed to circuits for glow discharge tubes in which voltage amplification is obtained. The present invention is directed to such tubes as current or power amplifiers and to cascade or tandem connected glow discharge tubes, some of which operate as voltage amplifiers in accordance with the former disclosure and others as current or power amplifiers in accordance with the present invention. The combination of the two types of amplifiers constitute an amplifying system particularly suitable for working into the usual type of load such as a loud speaker or light source for television and the like.

As disclosed in the above mentioned application, when a glow discharge tube having two cold electrodes, one of which is cup shaped to obtain a negative resistance is connected in series with a polarizing source and a positive resistance, that a voltage swing greater than the input voltage across both tube and positive resistances may be produced across the terminals of either the positive or negative resistance elements, the amount thereof depending upon the nature of the characteristic of each element. In the operation of the current amplifier employing a negative resistance element and a positive resistance element, a parallel arrangement of these elements is employed, the current through either branch of the circuit of these elements having a greater variation than the total current through both branches. This phenomenon will be more fully described hereinafter.

It has also been found that a negative resistance characteristic for glow discharge tubes may be obtained with a construction using three cold electrodes, one of which is used as a control electrode, a particular advantage being the separation of input and output circuits. Such a tube may be used both as a voltage or power amplifier or in combination with a two electrode tube as a voltage amplifier to feed a two electrode tube as a current amplifier as shown by the circuits to be described.

The invention will be more fully understood by reference to the following description in conjunction with the accompanying drawings in which:

Figures 1, 2 and 3, show single stage power amplifier circuits employing two electrode glow discharge devices having cup shaped cathodes;

Fig. 4 shows a two stage amplifier circuit using two electrode glow discharge devices;

Fig. 5 shows a two stage amplifier circuit using discharge devices having three cold electrodes.

Fig. 6 shows the circuit for a three electrode voltage amplifier feeding a two electrode power amplifier; and

Figs. 7 and 8 are diagrams which aid in the explanation of the action of the power amplifier tubes.

Referring specifically to Fig. 1, a glow discharge tube 5 has a cup shaped anode 6 and a point positive anode 7 which are polarized from a potential source to be connected to terminals 8 in series with a choke 9, and a protective resistance 10. The output circuit of this tube includes a

positive resistance 12, blocking condenser 13, and a load 14, this load representing an acoustic reproducer in the case of audio signals or a light source in the case of television signal amplification. The input is impressed on the tube 5 through coupling condensers 15. This circuit operates as a current amplifier because of the arrangement of the two parallel branches one of which is a tube having a negative resistance, and the other, the load circuit including the positive resistance 12, the theory of which will be described hereinafter.

The modification in Fig. 2 is similar to that of Fig. 1 in that it employs similar elements such as the coupling condensers 15, choke 9, protective resistance 10, tube 5 with its cathode 6, and anode 7, blocking condenser 13, and the load 14. The distinction, however, is that a resonant circuit 17 having an inductance 18 and variable capacity 19, simulates the positive resistance 12 of Fig. 1. By a proper tuning of this resonant circuit 17 it may be made to appear, at the frequency of transmission, as a pure resistance while the amplification may be emphasized on account of the resonant properties of the circuit, producing the more efficient power amplifier.

In Fig. 3, the same tube 5 with electrodes 6 and 7 is connected to an incoming circuit through an input transformer 21, and a direct current potential from terminals 22 is supplied, through the secondary of this transformer and a protective resistance 23, to the electrodes. A bypass condenser 24 shunts the potential source and resistance 23 so that the variable input current does not have to flow over the direct current source and the high protective resistance 73, although in some cases it may be desirable to shunt only the direct current source. The output circuit of this modification employs the blocking condenser 13 and positive resistance 12 of Fig. 1, while a load is illustrated as head phones 26 which may, of course, be any type of load as suggested above. The load may be shunted by a properly chosen condenser 27 to increase the efficiency of the amplifier circuit.

By now referring to Figs. 7 and 8 of the drawings, the theory of power amplification applicable to the above described circuits will be given. In Fig. 7, curve I_1 shows the relationship between the voltage across, and the current through, the positive resistance 12 of Figs. 1 to 3, or the resonant circuit 17 of Fig. 2, while curve I_2 shows voltage and current characteristics for the tube 5, and curve I shows the relationship between the voltage across, and current through the parallel circuit, including both the positive resistance and the tube 5. The curve I is the sum of curves I_1 and I_2. For a voltage change of $a-b$ produced by a total current variation ΔI passing through the parallel arrangement of the positive and negative resistance elements, a current change of $+\Delta I_1$ is produced in the positive resistance and a change of $-\Delta I_2$ is produced in the negative resistance.

By referring to Fig. 8, the parallel branch arrangement is illustrated with these currents legended thereon. It is obvious, therefore, that a certain change in total current through the parallel branches may produce a larger change in each branch, the magnitude thereof depending upon the slope of the characteristics. In this particular illustration, the largest variation is produced across the positive resistance element this increase being represented by $+\Delta I_1$.

To illustrate mathematically, based upon the fundamental equation

$$\frac{de}{di}$$

equals $-K$, the equation defining the negative resistance characteristic in which K has a numerical value representing the slope of the voltage-ampere characteristic, the equation for the positive resistance branch can be set up from the diagram in Fig. 7, thus:

$$\frac{dI_1}{dI}=\frac{(-R)}{R+(-R)}$$

while the equation for the negative resistance branch is

$$\frac{dI_2}{dI}=\frac{R}{R+(-R)}$$

Now referring to Fig. 4, a glow discharge device 30 having two electrodes 31 and 32 of plate construction is shown. It has been found that such tubes will have a negative resistance characteristic when a proper operating point is chosen. This tube is polarized from a source connected to terminals 34, the source being shunted by a bypass condenser 35. In series with the electrodes of tube 30 and the polarizing source is a positive resistance element 36 and the secondary of an input transformer 37. This arrangement will provide a voltage variation across resistance 36 greater than that impressed on the series circuit at the transformer 37.

The voltage across the resistance 36 is then impressed upon the power amplifier glow discharge tube 40, this tube having a cup shaped cathode 41, and a pointlike anode 42, through a coupling condenser 43. Potential for tube 40 is obtained from any direct current source connected to the terminals 44 and supplied to the tube through a protective resistance 45 and choke 46. The remainder of the coupling circuit between the tubes 30 and 40 comprises a direct current potential source 48, a variable resistance 49, and by-pass condenser 50 therefor. In this portion of the circuit the potential 48 may be eliminated when the resistance 49 and condenser 50 are properly adjusted, these elements being employed for adjustment to the best operating point of the power amplifier 40. The output circuit for the amplifier 40 is similar to that shown in Fig. 3 comprising a blocking condenser 51, positive resistance 52, by-pass condenser 53 and head phones 54, the head phones being shown to represent any type of load circuit of a like nature.

In Fig. 5, two three-electrode glow discharge devices 55 and 56 are shown connected for voltage amplification, followed by power amplification. Three element negative resistance tubes have the advantage of separating the input and output circuit of each tube. The tube 55 has two plate electrodes 58 and 59 and a control electrode 60, it being understood that the electrodes can also be of other suitable shapes. The input circuit of this tube comprises a biasing potential source 62, shunted by bypass condenser 63, and a variable resistance 64, shunted by a bypass condenser 65, in series with the secondary of input transformer 66. In this input circuit either the variable resistance 64 or the potential source 62 may be used separately; both being for the purpose of polarizing the control electrode 60 with respect to the cathode 58 of the tube 55. A direct potential connected to the terminals 68 bypassed by condenser 69 polarizes the electrodes 58 and

59 through a positive resistance 70. This arrangement of positive and negative resistances permits obtaining across the positive resistance, a voltage swing greater than that impressed on the series arrangement from the secondary of transformer 66.

The voltage produced across the resistance 70 is impressed upon the power tube 56 having electrodes 72 and 73 with a control electrode 74. The coupling between these tubes is through a blocking or coupling condenser 76, a variable resistance 77, shunted by bypass condenser 78, and direct current potential source 79, shunted by bypass condenser 80. As stated in the description of Fig. 4, the resistance 77 and potential source 79 are for the purpose of polarizing the control electrode of the tube 56 and may be employed together or separately as desired. The output circuit for the three electrode power tube 56 is one in which the direct potential source is connected across the terminals 82. The direct current path is along positive resistance 83, choke 84 and tube electrodes 72 and 73. The load 85 is connected in series with the positive resistance 86. The condenser 87 prevents the direct current from flowing over the load branch.

It is obvious from this arrangement that the input voltage is impressed upon a parallel arrangement consisting of the negative resistance of tube 56 and the positive resistance element 86. Consequently a larger current variation will occur through each branch of this parallel circuit than the variation in the total current in the series circuit across which the voltage from resistance 70 is impressed.

In Fig. 6 a circuit arrangement is shown in which a three electrode tube 88, similar to the tubes 55 and 56 of Fig. 5, is employed as a voltage amplifier, and a two electrode tube 89 similar to those in Figs. 1, 2 and 3 comprise the negative resistance element. The input transformer 90 impresses upon the input electrodes of tube 88 through the biasing resistance 91 shunted by bypass condenser 92, signal voltages to be amplified. The main electrodes of tube 88 are polarized from a direct current source connected across terminals 93, shunted by by-pass condenser 94 in series with a positive resistance 95. The coupling between tube 89 and tube 88 comprises solely a coupling condenser 96, but it is to be understood that other arrangements can be employed similar to those shown in Figs. 4 and 5. Tube 89 is to be polarized from a direct current source connected to terminals 97 through a choke 98 and protective resistance 99. A load 100 is connected in series with a positive resistance 101 to form a parallel branch circuit in conjunction with negative resistance tube 89. The condenser 102 serves the same purpose as condenser 87 in Fig. 5. There is, therefore, in this circuit, a series arrangement of a positive resistance 95 and a negative resistance 88 for voltage amplification and a parallel arrangement of a positive resistance 101 and a negative resistance 89 for power amplification, the combination thereof producing a general utility amplifier possessing the qualifications for obtaining a large gain in signal strength without distortion. By the use of tubes such as these with input and output impedances to match the impedances of the circuits to which they are connected, more efficient amplification with fidelity is obtainable.

Although the invention has been described with respect to specific circuit arrangements, it is to be understood that other arrangements will occur to those skilled in the art and these equivalent systems are intended to be within the scope of the appended claims.

What is claimed is:

1. In an amplifier circuit, the combination of a plurality of non-magnetically controlled ionization discharge tubes, an input circuit for the first of said tubes, and an output circuit for the last of said tubes, and means for interconnecting the output of a preceding tube to the input of a subsequent tube, one of said tubes being a voltage amplifier, the last of said tubes being a power amplifier, said tubes having ionization electrodes so shaped and so positioned and polarized relative to each other that the discharges occurring between said ionization electrodes exhibit negative resistance characteristics.

2. In an amplifier circuit, the combination of a plurality of non-magnetically controlled ionization glow discharge devices, an input circuit for the first of said devices, an output circuit for the last of said devices, and means for interconnecting said devices the first of said devices being a voltage amplifier and the last of said devices being a power amplifier, all of said devices having ionization electrodes so shaped and so positioned and polarized relative to each other that a glow discharge is produced within one of said electrodes to produce negative resistance characteristics.

3. In an electrical amplifying system, the combination of a plurality of non-magnetically controlled ionization discharge tubes having cold electrodes, an input circuit for the first of said tubes, an output circuit for the last of said tubes, and intermediate circuits connecting the output of a preceding tube with the input of a subsequent tube, said tubes each having ionization electrodes so positioned and so polarized and energized as to produce an ionization discharge therebetween having a negative resistance characteristic, the first of said tubes being a voltage amplifier and the last of said tubes being a current amplifier.

4. In an electrical amplifying system a plurality of non-magnetically controlled glow discharge devices having a plurality of electrodes, an input circuit for the first of said devices connected between a control electrode and one other of said electrodes, an output impedance connected between said common electrode and another of said electrodes, means for connecting said impedance to the second of said glow discharge devices between the control electrode and another of said electrodes of said second discharge device, and a load circuit connected in series with two other electrodes of said second device, said devices having ionization electrodes so positioned and so polarized and energized with respect to each other that the discharges occurring between said ionization electrodes exhibit negative resistance characteristics.

5. In an electrical amplifying system, a plurality of non-magnetically controlled ionization glow discharge devices each having ionization electrodes so polarized as to produce an ionization discharge having a negative resistance characteristic, means for impressing on the first of said devices signals to be amplified, said first device amplifying the voltage of said signals, and means for connecting the output of said first device to the input of a second device, said second device amplifying the current of said signals.

6. In an electrical amplifying system, a plu-

rality of non-magnetically controlled and operated glow discharge tubes having ionization electrodes so polarized and energized with respect to each other as to provide an ionization discharge having negative resistance characteristics, the first of said tubes being a voltage amplifier and the last of said tubes being a power amplifier, and means for interconnecting said tubes for operation in tandem.

7. In an electrical amplifying system, the combination of a plurality of cold electrode discharge tubes connected in tandem, an input circuit connected between a pair of electrodes of the first of said tubes, a potential supply connected between another pair of electrodes of said tube, one of said electrodes being common to both of said pairs, a resistance element in said potential supply circuit, a second three electrode tube having a pair of electrodes connected across said resistance element, said connections including means for polarizing said electrodes, and a second potential supply connected to another pair of electrodes of said second tube, one electrode being common to both of said pairs, and an output device for utilizing the power output of said second tube.

8. In an electrical amplifying system, the combination of a plurality of glow discharge tubes having ionization electrodes so positioned and so polarized and energized as to produce an ionization discharge therebetween having negative resistance characteristics, the first of said tubes having at least three cold electrodes and being a voltage amplifier, and the last of said tubes having at least two cold electrodes and being a power amplifier, and means for interconnecting said tubes for operation in tandem.

9. In an electrical amplifying system, the combination of a plurality of glow discharge tubes connected in tandem, a positive resistance element, a potential supply, said potential supply, resistance element, and the first of said plurality of said tubes being connected in series, a second source of potential, a second positive resistance, said positive resistance and the second of said plurality of tubes being connected in parallel and both being connected in series with said second source of potential, and means for connecting the input of said second tube across the positive resistance of said first tube.

10. In an electrical amplifying system, the combination of a plurality of glow discharge tubes having negative resistance characteristics, a potential supply for the first of said tubes, a positive resistance element, said positive resistance element, potential supply, and the first tube of said plurality being connected in a series circuit for amplifying voltages impressed upon said series circuit, a second positive resistance, said positive resistance and the second of said plurality of tubes being connected in parallel, a potential supply, said potential supply being connected in series with said parallel circuit, said second tube and second positive resistance having a greater current variation therein than the remainder of said circuit, and means for coupling the output of the first of said tubes to the input of the second of said tubes.

AUGUST HUND.