March 30, 1926. 1,578,527

R. T. KINTZING

ELECTRIC SWITCH

Filed April 21, 1921 2 Sheets-Sheet 1

Fig. 1.

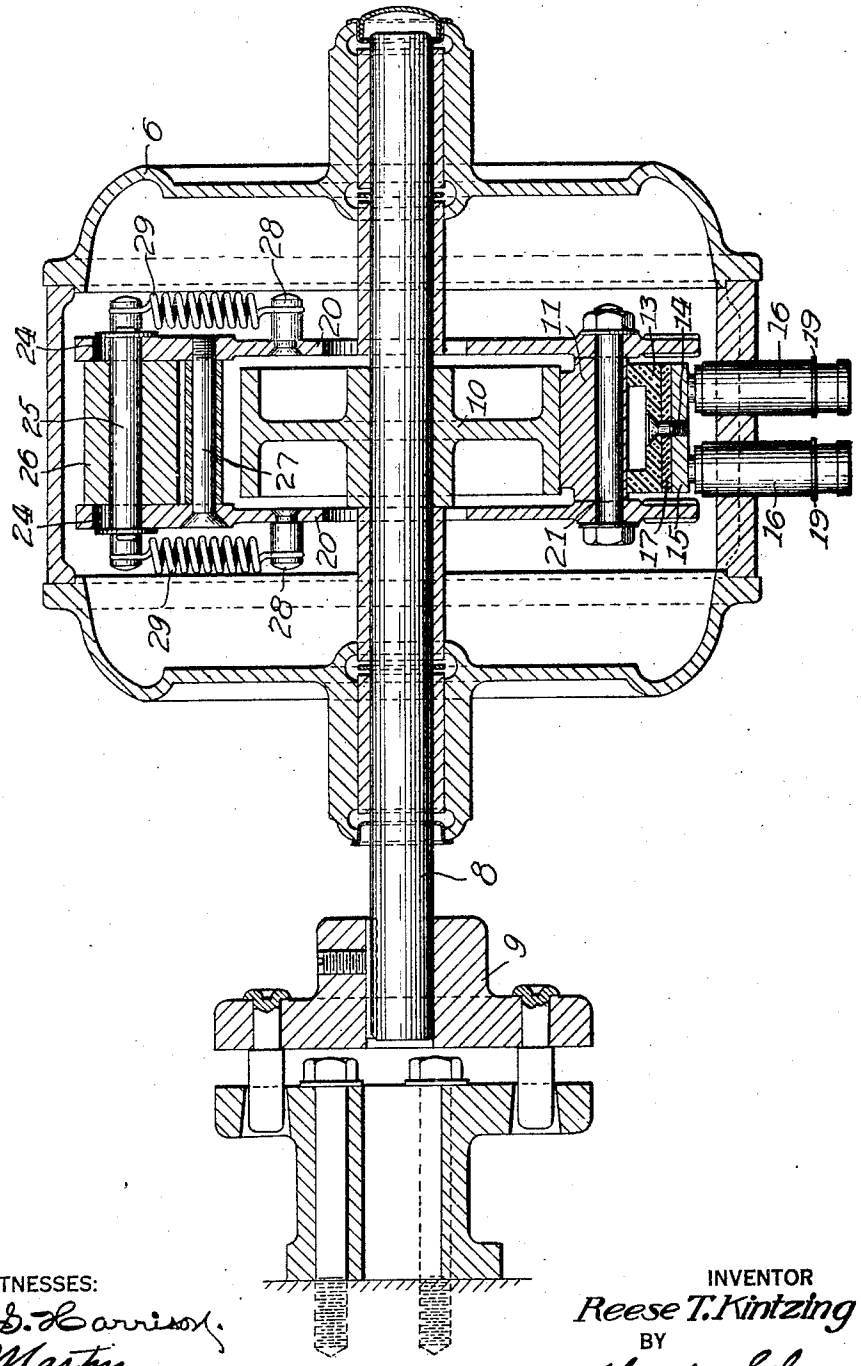

WITNESSES:

R. B. Harrison.

A. Martin

INVENTOR

Reese T. Kintzing

BY

Wesley G. Carr

ATTORNEY

March 30, 1926. 1,578,527

R. T. KINTZING

ELECTRIC SWITCH

Filed April 21, 1921 2 Sheets-Sheet 2

Fig. 2.

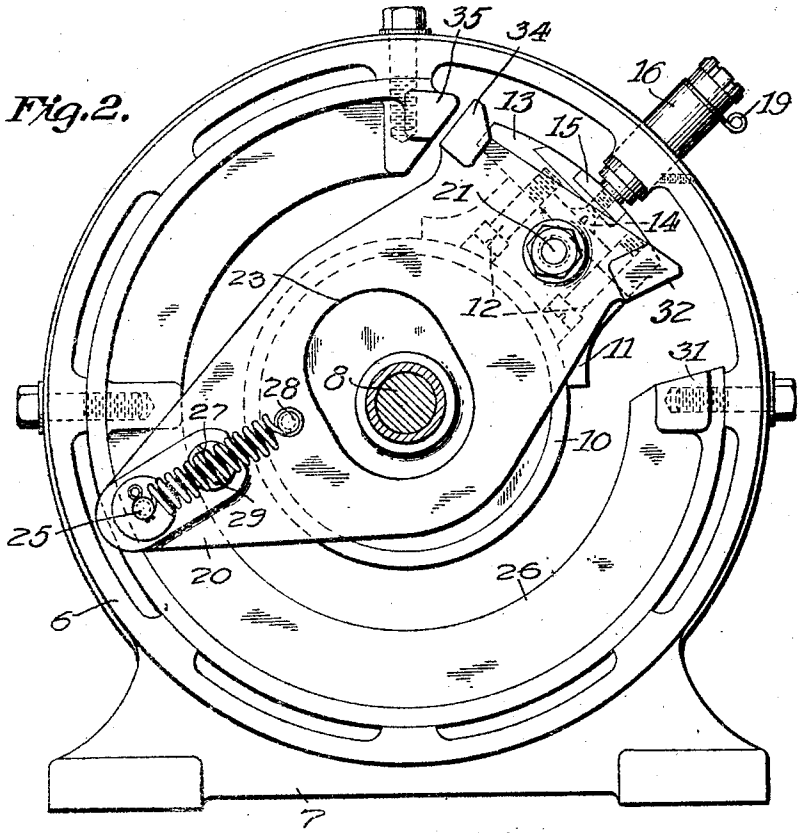

Fig. 3.

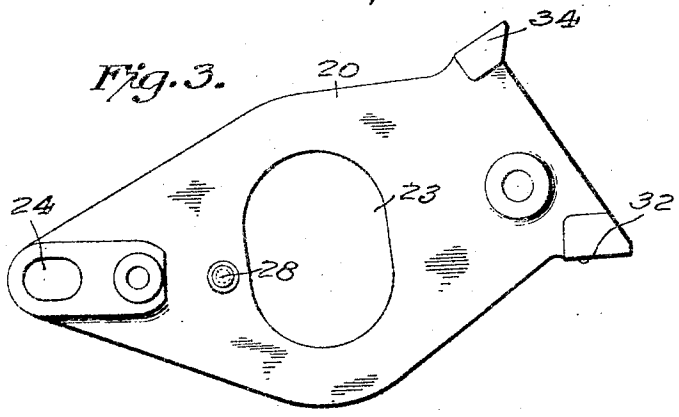

Fig. 4.

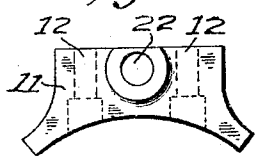

Fig. 5.



WITNESSES:

R. S. Harrison.

A. Martin

INVENTOR

Reese T. Kintzing

BY

Wesley Gloar

ATTORNEY

Patented Mar. 30, 1926. 1,578,527

UNITED STATES PATENT OFFICE.

REESE T. KINTZING, OF WILKINSBURG, PENNSYLVANIA, ASSIGNOR TO WESTINGHOUSE ELECTRIC & MANUFACTURING COMPANY, A CORPORATION OF PENNSYLVANIA.

ELECTRIC SWITCH.

Application filed April 21, 1921. Serial No. 463,113.

To all whom it may concern:

Be it known that I, REESE T. KINTZING, a citizen of the United States, and a resident of Wilkinsburg, in the county of Allegheny and State of Pennsylvania, have invented a new and useful Improvement in Electric Switches, of which the following is a specification.

My invention relates to electrical switches and more particularly to switches that are automatically operated through change in direction of movement of mechanisms with which they are associated.

In the operation of electrically driven machinery, such as the crushing rolls in a rubber mill, in case of accidents, it is sometimes necessary to bring the machinery to a sudden stop, as when a workman becomes caught in the rolls.

In order to effect a quick cessation of movement, it is customary to reverse the direction of current through the motor, thus exercising a high degree of braking action.

However, it is not desirable to actually reverse the movement of the rolls or other machinery in which the workmen may be caught, because greater injury to them might thereby result. Therefore, the machinery is so constructed that two opposing rolls may be released from their supporting members and moved apart in order to effect the removal of any object caught therebetween.

The object of my invention is to provide means whereby, upon reversal of the current through the motor, the latter will be disconnected from the line before its travel in reverse direction is sufficient to cause any substantial reverse movement of the machine that is driven by the motor.

A further object of my invention is to provide a frictionally operated switch that is subjected to a minimum amount of wearing action when in its normal position and to generally simplify the construction and operation of switches of this character.

In the accompanying drawing—

Figure 1 is a longitudinal sectional view of my device;

Fig. 2 is a view thereof in end elevation, and

Figs. 3, 4 and 5 are detail views of certain parts of the movable contact-carrying members.

The switch proper is mounted within a frame 6 that is provided with a base portion 7. A shaft 8, which is provided for transmitting motion to the movable portions of the switch mechanism, is connected, through a coupling 9, to a motor shaft (not shown).

A pulley 10 is secured to the shaft 8 and a shoe 11 is frictionally engaged by the pulley 10. The shoe 11 is provided with holes 12 through which screws extend into a block 13. The block 13 is, in turn, provided with a hole through which a screw 14 extends. The screw 14 secures a bridging, or movable, contact member 15 in proper position to serve as a bridging member for a pair of contact members 16. The block 13 is of insulating material, and a plate 17, also of insulating material, is disposed between the block 13 and the bridging member 15. The member 13 insulates the screw 14 from the shoe 11, and the insulating plate 17 insulates the contact member 15 from the screws that extend through the holes 12 of the shoe 11.

In order to control the position of the shoe on the pulley 10, I provide a pair of bracket members 20 through the outer ends of which a pin 21 extends. This pin 21 passes through a hole 22 in the shoe 11 and rotatably supports such shoe between the brackets 20.

The brackets are provided with enlarged openings 23 in order that the movement of the brackets may not be interfered with by the shaft 8.

The brackets 20 are provided also with slotted openings 24 at their lower ends in order that they may move relatively to a pin 25. The pin 25 is secured to a supporting member 26 that is carried in the frame 6. A screw 27 serves to maintain the lower ends of the brackets 20 in proper relative position.

A pair of pins 28 are secured to the brackets 20 and support a pair of tension springs 29 that are also attached to the fixed pin 25. The springs 29, when the switch is in open position, maintain the shoe 11 in yielding engagement with the pulley 10 so that, when the shaft 8 and the pulley 10 are rotated in a counter clockwise direction, the shoe is advanced to substantially the

position shown in Fig. 2. When the pulley 10 is rotated in a clock-wise direction, the shoe is moved and stop shoulders 32 on the brackets 20 are brought into engagement with a stop shoulder 31 of the member 26, and the circuit through the terminals 19 that are carried by the contact members 16, is broken.

The springs 29 are so calibrated that, when the motor runs forward, or in a counter clock-wise direction, and the shoe has been brought to its upper or switch-closing position, the tension exerted thereon is comparatively light, due to the fact that the distance between the shoe 11 and the pin 25 has been shortened by such movement. In this position, there is practically no spring pressure upon the shoe, and the frictional engagement by the pulley tends to raise the shoe and the brackets 20 into a still higher position, thus, to some extent, counter-balancing the force of gravity and thereby reducing the friction between the shoe and the pulley.

The upward movement of the shoe is limited by stop members 34 on the brackets 20 and a stop member 35 on member 26.

If the motor is reversed and the pulley 10 driven in a clock-wise direction, the frictional force and the force of gravity take the same direction, and the shoe will travel downwardly against the resisting force of the spring and the friction of the relatively movable contact members until the abutting surfaces 32 of the brackets 20 engage the stop shoulder 31.

Upon the starting of the motor in its counter clock-wise, or normal direction of movement, the force exerted by the springs 29 upon the shoe causes such frictional engagement between it and the pulley as to overcome the resistance of gravity as well as the friction of the co-operating contact members and the bracket bearings, thus enabling the shoe to carry the bridging member 14 to closed position.

If, during the operation of the apparatus in its forward or normal direction an accident occurs which necessitates quick stopping of the machines, the direction of current through the motor (not shown), is reversed, thus bringing the motor and machinery driven thereby to a quick stop and causing the motor to move in the reverse direction.

However, before such reverse movement has attained any considerable degree, the circuit through the contact members 16 is broken. The contact members 16 complete a circuit through a relay (not shown), which, in turn, controls the motor circuit, the breaking of the relay circuit, upon reverse movement of the apparatus, causes the motor circuit to be broken and the reverse movement of the motor to cease.

If desired, the switch contact members and the frictional operating mechanism may be located in a plane below the axis of the pulley 10 and proper tension be maintained upon the shoe in order to insure movement thereof by the pulley 10, or, such parts may be located at any other position with respect to the periphery of the pulley 10.

Various other modifications may be made in the apparatus without departing from the spirit of the invention as defined in the accompanying claims.

I claim as my invention:

1. An electrical contact making and breaking device responsive to the direction of rotation of a rotatable member, comprising the combination with said rotatable member, of a stationary member, a brake shoe bearing on said rotatable member and mounted for a limited oscillatory movement thereon, cooperating electrical contact members carried by said rotatable and stationary members, and yieldable means responsive to said oscillatory movement for causing the brake shoe to frictionally engage the rotatable member with greater pressure at one end of its oscillation than at the other.

2. In combination, in a switch mechanism, a drum-like member rotatable in a vertical plane, a movable contact member frictionally connected to the rotatable member and adapted to be moved thereby, a stop member located in a plane above the axis of the rotatable member, for limiting the movement of the movable contact member, a stop member located in a plane below the first named stop member for limiting the movement of the movable contact member in the reverse direction, and means for increasing the frictional connection between the rotatable member and the movable contact member when the movable contact member is adjacent to its lower position.

3. In combination, in a switch mechanism, a drum-like member rotatable in a vertical plane, a movable contact member frictionally connected to the rotatable member and adapted to be moved thereby, a stop member located in a plane above the axis of the rotatable member for limiting the movement of the movable contact member, a stop member located in a plane below the first named stop member for limiting the movement of the movable contact member in the reverse direction, means for increasing the frictional connection between the rotatable member and the movable contact member when the movable contact member is adjacent to its lower position, and means for decreasing the frictional connection between the movable contact member and the rotatable member when the movable contact member is in its upper position.

4. In a switch mechanism, a base member, a rotatable member, a relatively movable

contact member, and means pivoted to said base member for securing a frictional connection between said rotatable member and said contact member, whereby the angular relation between said pivot, the axis of said rotatable member and said contact member is varied in such manner as to vary the friction according to the direction of rotation of said rotatable member.

5. In a switch mechanism, a base member, a rotatable member, and a movable contact member having a limited oscillatory movement with respect to said base member and frictionally bearing against the periphery of said rotatable member, the construction being such that said oscillatory contact member bears harder against said rotatable member at one end of its oscillatory movement than at the other.

6. In a switch mechanism, a base member, a rotatable member, a movable contact member having a limited oscillatory movement with respect to said base member and frictionally bearing against the periphery of said rotatable member, and yieldable means eccentrically connected with respect to said rotatable member for causing said oscillatory contact member to bear harder against said rotatable member at one end of its oscillatory movement than at the other.

In testimony whereof, I have hereunto subscribed my name this 12th day of April 1921.

REESE T. KINTZING.