(12) INTERNATIONAL APPLICATION PUBLISHED UNDER THE PATENT COOPERATION TREATY (PCT)

(19) World Intellectual Property Organization
International Bureau

(43) International Publication Date
13 September 2018 (13.09.2018)

WIPO | PCT

(10) International Publication Number
WO 2018/161111 A1

(51) International Patent Classification:
A47G 19/22 (2006.01) *B65D 1/06* (2006.01)

(21) International Application Number:
PCT/AU2018/050196

(22) International Filing Date:
05 March 2018 (05.03.2018)

(25) Filing Language: English

(26) Publication Language: English

(30) Priority Data:
2017900755 05 March 2017 (05.03.2017) AU

(72) Inventor; and
(71) Applicant: ROGERS, Candice [AU/AU]; 242 Seventh Avenue, Llandilo, New South Wales 2747 (AU).

(74) Agent: FB RICE PTY LTD; Level 23, 44 Market Street, Sydney, New South Wales 2000 (AU).

(81) Designated States *(unless otherwise indicated, for every kind of national protection available)*: AE, AG, AL, AM, AO, AT, AU, AZ, BA, BB, BG, BH, BN, BR, BW, BY, BZ, CA, CH, CL, CN, CO, CR, CU, CZ, DE, DJ, DK, DM, DO, DZ, EC, EE, EG, ES, FI, GB, GD, GE, GH, GM, GT, HN, HR, HU, ID, IL, IN, IR, IS, JO, JP, KE, KG, KH, KN, KP, KR, KW, KZ, LA, LC, LK, LR, LS, LU, LY, MA, MD, ME, MG, MK, MN, MW, MX, MY, MZ, NA, NG, NI, NO, NZ, OM, PA, PE, PG, PH, PL, PT, QA, RO, RS, RU, RW, SA, SC, SD, SE, SG, SK, SL, SM, ST, SV, SY, TH, TJ, TM, TN, TR, TT, TZ, UA, UG, US, UZ, VC, VN, ZA, ZM, ZW.

(84) Designated States *(unless otherwise indicated, for every kind of regional protection available)*: ARIPO (BW, GH, GM, KE, LR, LS, MW, MZ, NA, RW, SD, SL, ST, SZ, TZ, UG, ZM, ZW), Eurasian (AM, AZ, BY, KG, KZ, RU, TJ,

(54) Title: A BOTTLE CONVERTIBLE TO A GLASS

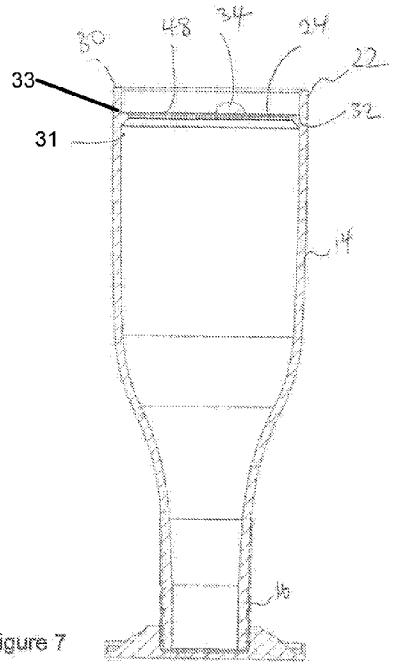

Figure 7

(57) Abstract: A bottle (10) convertible to a drinking glass includes a receptacle body (14) adapted to hold a fluid, a first end (18) of the receptacle body (14) and an opposing second end (22) of the receptacle body. The bottle includes a removable base (20) fitted to the second end (22) of the receptacle body (14) in an initial condition. The removable base (20) is adapted to support the bottle (10) in a converted condition in which the removable base (20) is removed from the second end (22) of the receptacle body (14) and the receptacle body (14) is oriented with the first end (18) being engaged with and supported by the removable base (20). An annular shoulder (33) is formed from a side wall (35) of the receptacle body (14) and spaced apart from a rim (30) of the second end (22) in a direction toward the first end (18). A removable seal (24) is initially in sealing engagement with the shoulder (33). The removable seal (24) is openable to allow access to the fluid from the second end (22).

WO 2018/161111 A1

[Continued on next page]

TM), European (AL, AT, BE, BG, CH, CY, CZ, DE, DK, EE, ES, FI, FR, GB, GR, HR, HU, IE, IS, IT, LT, LU, LV, MC, MK, MT, NL, NO, PL, PT, RO, RS, SE, SI, SK, SM, TR), OAPI (BF, BJ, CF, CG, CI, CM, GA, GN, GQ, GW, KM, ML, MR, NE, SN, TD, TG).

Published:

— *with international search report (Art. 21(3))*

"A bottle convertible to a glass"

Cross-Reference to Related Applications

[0001] The present application claims priority from Australian Provisional Patent Application No 2017900755 filed on 5 March 2017, the content of which is incorporated herein by reference.

Technical Field

[0002] The invention relates to a bottle convertible to a glass, in particular, the invention relates to a wine bottle convertible to a drinking glass and an associated method of use.

Background

[0003] Single serving wine bottles are known in the art. These are essentially smaller versions of standard 750 ml. wine bottles, and generally have a metal cap. Once purchased, the cap is removed and the contents are poured into a separate glass for consumption. In situations when a glass is not available, one could drink the wine directly from the bottle.

[0004] However, it is often not preferable or acceptable to drink wine directly from the bottle. Accordingly, wine bottles that convert to a glass have been devised. US6662959 discloses a wine bottle convertible to a wine glass permitting the consumption of the wine directly therefrom is provided. The wine bottle may be sized to house a single serving of wine. The convertible wine bottle comprises four main elements which are assembled and filled with wine in a bottling process. These four integrated components are manipulated by the consumer to transform the wine bottle into a wine glass with an appropriate portion of wine therein. Such a convertible bottle of wine would give users the pleasure of drinking their wine from a stemmed glass.

[0005] Problem with this convertible wine glass relates to its complexity of construction, associated manufacturing complexity and cost, and ease of use. Another problem relates to its aesthetic appeal.

Summary

[0006] In accordance with a first broad aspect there is provided, a bottle which is convertible to a drinking glass. The bottle includes:

a receptacle body adapted to hold a fluid;

a first end of the receptacle body and an opposing second end of the receptacle body;

a removable base fitted to the second end of the receptacle body in an initial condition, the removable base being adapted to support the bottle in a converted condition in which the removable base is removed from the second end of the receptacle body and the receptacle body is oriented with the first end being engaged with and supported by the removable base;

an annular shoulder formed in a side wall of the receptacle body and spaced apart from a rim of the second end in a direction toward the first end; and

a removable seal being initially in sealing engagement with the shoulder, the removable seal being openable to allow access to the fluid from the second end.

[0007] The annular shoulder may include an annular groove which opens toward the second end. The annular groove may be adjacent the side wall of the receptacle body.

[0008] The annular shoulder may include an annular projection which projects toward the second end.

[0009] The bottle may further comprise a removable closure fitted to the first end of the receptacle body.

[0010] The first end may be sealed by an end wall of the receptacle body. In this case, the first end may be formed to resemble a removable closure such as a cap. In addition, the sealed first end may be configured to receive a cap.

[0011] The removable seal may include a handle accessible in the converted condition to open the seal.

[0012] The removable base may include an annular skirting flange arranged to receive the second end in the initial condition, and a central recess arranged to fittingly receive the removable closure in the converted condition.

[0013] The removable base may include an annular channel immediately inside and adjacent the annular skirting flange, the annular channel being arranged to fittingly receive the rim of the second end so as to reseal the receptacle body in a resealed condition.

[0014] The removable base may be screwably engageable with the second end of the receptacle body.

[0015] The removable base may include a pedestal in which the central recess is formed. The pedestal may have a height so as to substantially extend between on outer face of the removable base and a face of the removable seal in the initial condition.

[0016] In the initial position, a portion of the removable base may press against the removable seal where the removable seal is in sealing engagement with the shoulder.

[0017] The pedestal may engage with and supports the removable seal in the initial condition.

[0018] The receptable bottle is shaped as a wine bottle having a neck that terminates at the first end.

[0019] In accordance with the present disclosure, there is also provided a method of converting a bottle into a drinking glass, the method including the steps of:

removing the removable base from the second end of the receptacle body of the bottle as described above;

inserting the first end of the receptacle body into a recess in the removable base such that the removable base is able to support the receptacle body in an inverted condition with the second end oriented vertically upwardly; and

removing the removable seal from within the second end to allow drinking of the fluid from the second end.

[0020] In accordance with the present disclosure, there is also provided a method of converting a bottle into a drinking glass, the method including the steps of: Removing a base from a base end of a receptacle body of the bottle; Inserting a top of a neck of the receptacle body into a recess in the base such that the base is able to support the receptacle body in an inverted condition with the base end oriented vertically upwardly; and Removing a removable

seal, sealingly engaged with a shoulder formed on an inside wall of the receptacle body and spaced apart from a rim of the base end in a direction toward the neck of the receptacle body, from within the base end allowing drinking of a fluid from the base end.

Brief Description of Drawings

[0021] The invention is described, by way of non-limiting example only, by reference to the accompanying figures, in which;

[0022] Figure 1 is a perspective view illustrating a convertible bottle in a first or initial condition;

[0023] Figure 2 is a perspective view illustrating the convertible bottle in the first or initial condition with the base removed;

[0024] Figure 3 is a perspective view illustrating the convertible bottle being moved toward a second or converted condition

[0025] Figure 4 is a perspective illustrating the convertible bottle in the second or converted condition in which a use may drink from the bottle;

[0026] Figure 5 is a side view illustrating the convertible bottle in the first or initial condition;

[0027] Figure 6 is a side view illustrating the convertible bottle in the second or converted condition;

[0028] Figure 7 is a cross-section side view illustrating the convertible bottle along section A-A shown in Figure 8;

[0029] Figure 8 is a side view illustrating the convertible bottle indicating section A-A;

[0030] Figure 9 is a perspective in-use view illustrating convertible bottle being used in a further configuration with a lid thereof removed for pouring into a glass;

[0031] Figure 10 is a perspective view illustrating the base;

[0032] Figure 11 is a bottom view illustrating the base;

[0033] Figure 12 is a side view illustrating the case indicating section A-A;

[0034] Figure 13 is a sectional view illustrating the base;

[0035] Figure 14 is a schematic diagram of a cross-section of a convertible bottle with the base removed.

[0036] Figure 15 is a close up view showing the area in the dashed circle B in Figure 14.

[0037] Figure 16 is a schematic diagram of a cross-section of a convertible bottle with the base positioned on the second end.

[0038] Figure 17 is a close up view of a shoulder region of a side wall of an another embodiment.

Description of Embodiments

[0039] Referring to Figures 1 to 9, there is shown a bottle 10 (shown in Figure 1) convertible to a drinking glass 12 (shown in Figure 4). The bottle 10 includes a receptacle body 14 adapted to hold a fluid such as wine. The receptacle body 14 has a first end 18 and an opposing second end 22. In the embodiment shown in Figures 1 to 9, a removable closure 15 in the form of a cap 16 is fitted to the first end 18 of the receptacle body 14. A removable base 20 is fitted to the opposing second end 22 of receptacle body 14. In Figure 1, the bottle 10 is shown in an initial condition. The removable base 20 is adapted to support the bottle in a converted condition (see Figure 4) in which the base 20 is removed from the second end 22 of receptacle body 14 and the receptacle body 14 is oriented with the first end 18 being engaged with and supported by the removable base 20. Removal of the base 20 reveals a removable seal 24 within the receptacle body 14 toward the second end 22 that is openable to allow access to the fluid via the second end 22, for example, for drinking the fluid.

[0040] In more detail, in this example, the receptacle body 14 is shaped as a wine bottle having a relatively wider main body 26 that narrows to a neck 28. The neck 28 terminates at the first end 18. In this example, the neck 28 is coupled to the cap 16. The main body 26 terminates at a rim 30 that is initially fitted with the removable base 20.

[0041] The receptacle body 14 includes an annular ledge 32 (shown in Figure 7) that extends substantially around an inner face 31 of the receptacle body 14 forming an annular shoulder 33 with the side wall 35 of the receptacle body 14. The annular shoulder 33 is spaced apart from the rim 30 of the second end 22 in a direction toward the first end 18. The removable seal 24 is initially in sealing engagement with the annular shoulder 33. The removable seal 24 may be formed from a variety of materials such as a metal or a plastic. For example, the removable seal 24 may include a plastic heat sealed onto the shoulder 33. The removable seal 24 includes a handle or tab 34 accessible in the converted condition to open the seal 24. The removable seal 24 forms a primary seal and the removable base 20 provides a secondary seal. The annular shoulder 33 being spaced apart from the rim 30 ensures any plastic, edges or tears associated with the seal 24 are away from the rim 30 from which the user drinks in the converted condition. The seal 24 may be non- reclosable. The receptacle body 14 may be formed form plastic (for example, PET) or other suitable material.

[0042] In the embodiments shown in Figures 14 and 15 and in Figure 16, features which are similar to those described above are indicated with the same reference numbers. It should be noted these and other figures are schematic and the features of the convertible bottle are not necessarily shown to scale. In the embodiment shown in Figure 14 and 15, the shoulder 133 is formed by a step 150 in the side wall 35. Between the step 150 and the rim 30 of the second end 22, the side wall 35 is thinner. Between the step 150 and the first end 18, the side wall 35 is thicker. In addition, as can be seen in Figure 14, an annular groove 152 is formed in the shoulder 133 adjacent the side wall 35. The annular groove 152 facilitates removal of removable seal 24 from the shoulder 133. The annular groove 152 reduces the surface area of the shoulder 133 to which the removable seal 20 is sealed in the initial condition.

[0043] By way of example, for the embodiment shown in Figure 14 and 15, the thickness of thinner portion 154 of the side wall 35 between the step 150 and the rim 30 of the second end 22 may be 1 mm thick and the thickness of the thicker portion 156 of the side wall 35 between the step 150 and the first end 18 may be 3.1 mm. In that case, the width of the step

may be 2.1 mm and the width of the annular groove may be 0.8 mm. In this case, the external diameter of the receptacle body 114 at the second end may be approximately 60 mm.

[0044] The first end 18 of the receptacle body 14 is shown without a removable closure 15 closing the first end 18.

[0045] While an annular groove 152 is not shown in the embodiment illustrated in Figure 7, an annular groove 152 is compatible with that embodiment and may also be provided in the shoulder 33. In that case, the annular groove 152 may be provided adjacent the side wall 35.

[0046] In the embodiment shown in Figure 16, the removable base 20 includes a portion in the form of a projection 153 which presses the removable seal 24 where the removeable seal 24 is in sealing engagement with the shoulder 133. The shape and configuration of the portion which presses the removable seal is not limited to that illustrated in Figure 16. This pressing may assist in maintaining the removable seal in its engagement with the shoulder 133.

[0047] In addition, in the embodiment shown in Figure 16, the removable base 20 is configured to screwably engage the outer surface 58 of the side wall 35 at the second end 22 by means of compatible screw threads 60 and 62 provided on the inside surface of the annular skirting flange 136 and the outer surface 58 of the side wall 35 in the vicinity of the second end 22, respectively.

[0048] An annular ridge or annular projection 254 (see Figure 17) may be provided in the shoulder 233 projecting toward the second end 22. The ridge or projection 254 may facilitate removal of the removable seal 22 (not shown in Figure 17) by reducing the surface area along which the removable seal 22 is in sealing engagement with the shoulder 233. This ridge or projection 254 is compatible with the embodiments shown in Figure 7 and Figure 14. In this embodiment, a screw thread 262 is provided on the outer surface 58 of the side wall 35 for engaging the removable base 22 (not shown in Figure 17).

[0049] Turning now to the removable base 20, as best shown in Figures 10 to 13, the removable base 20 includes an annular skirting flange 36 arranged to receive the second end 22, namely the rim 30, in an initial condition, and a central recess 35 arranged to fittingly

receive the cap 16 of the first end 18 in the converted condition. An annular channel 38 is located immediately inside and adjacent the annular skirting flange 26, the annular channel 38 being arranged to fittingly receive the rim 30 of the second end 22. The annular channel 38 and rim 22 have a press fit to retain the rim 30, and to also allow the resealing of the receptacle body 14 in a resealed condition, after the seal 24 has been removed.

[0050] The removable base 20 further includes a pedestal 40 having tapered sides 42 to extend from the annular channel 38 to a flat top 44 of the pedestal 40 in which the central recess 35 is located. The central recess 35 is shaped to press fit with the cap 16 in the inverted condition. The pedestal 40 has a height so as to substantially extend between an outer face 46 of the removable base 20 and a face 48 of the removable seal 24 in the initial condition. Accordingly, the pedestal 40 may engage with and support the removable seal 24 in the initial condition. It is noted the outer face 46 is relatively flat and the pedestal 40 is concealed in the initial condition to provide the bottle 10 with an aesthetically pleasing appearance.

[0051] In the embodiment shown in Figure 1 to 9, the first end 18 of the receptacle body 14 is open and a removable closure 15 in the form of a cap 16 closes the first end 18. However, as shown in Figure 16, the first end 18 of the receptacle body 214 is closed by an end wall 56 of the receptacle body 214. In this case, a removable closure 15 or cap 16 is not necessary. However, for the purpose of appearances and visual effect, the first end 18 may be made to resemble the top of a bottle (such as a wine bottle) by shaping the first end 18 in the shape of a closure means or a cap, or the first end 18 may be configured to engage a removable closure means in the form of a cap 16 which covers the end wall 56 of the receptacle body 214 as shown in Figure 16.

[0052] The receptacle body 14 as shown in Figures 1 to 9 and in Figure 14 may be produced by injection moulding. The receptacle body 114 being closed at one end may be produced by injected blow moulded or extrusion blow moulded.

[0053] In use, as best shown in Figure 1 to 4, a method of converting the bottle 10 into the drinking glass 12, may generally include the steps of: removing the base 24 from base or second end 22 of the receptacle body 12 of the bottle 10. Inserting a top of a neck of the receptacle body having the closure 15 thereon into the central recess 35 of the base 20 such that the base 20 is able to support the receptacle body 14 in an inverted condition with the

base end 22 oriented vertically upwardly. And, removing the seal 24 from within the base end 22 allowing drinking of the fluid such as wine from the base end 22. A further method steps, may include resealing the base end 22 by press fitting the base 20 thereto. In some uses, the closure 15 in the form of the cap 16 may be removed the bottle 10 may be used in a normal orientation as shown in Figure 9.

[0054] Advantageously, there have been described a wine bottle that is convertible to a glass. The wine bottle shown in Figure 1 to 9 includes a closure or cap on the neck that allows the bottle to be used as per normal. However, most advantageously, the wine bottle includes a dual sealing arrangement having an outer base that is removed to reveal an inner non-recloseable seal which is removed to access liquid. The outer base includes a pedestal having a central recess to support the neck in the converted condition so as to provide the glass. The base may be fitted back to the base end of the bottle to reseal the bottle in a resealed condition. The construction of the wine bottle is relatively simple including a moulded receptacle body and base, and a metal or plastic lid. The seal may be heat sealed onto the ledge to assist to preserve the liquid such as wine and reduce the dependence on the base that provides the secondary seal.

[0055] Throughout this specification and the claims which follow, unless the context requires otherwise, the word "comprise", and variations such as "comprises" and "comprising", will be understood to imply the inclusion of a stated integer or step or group of integers or steps but not the exclusion of any other integer or step or group of integers or steps.

[0056] The reference in this specification to any known matter or any prior publication is not, and should not be taken to be, an acknowledgment or admission or suggestion that the known matter or prior art publication forms part of the common general knowledge in the field to which this specification relates.

[0057] While specific examples of the invention have been described, it will be understood that the invention extends to alternative combinations of the features disclosed or evident from the disclosure provided herein.

[0058] Many and various modifications will be apparent to those skilled in the art without departing from the scope of the invention disclosed or evident from the disclosure provided herein.

[0059] It will be appreciated by persons skilled in the art that numerous variations and/or modifications may be made to the above-described embodiments, without departing from the broad general scope of the present disclosure. The present embodiments are, therefore, to be considered in all respects as illustrative and not restrictive.

CLAIMS:

1. A bottle convertible to a drinking glass, the bottle including:

a receptacle body adapted to hold a fluid;

a first end of the receptacle body and an opposing second end of the receptacle body;

a removable base fitted to the second end of the receptacle body in an initial condition, the removable base being adapted to support the bottle in a converted condition in which the removable base is removed from the second end of the receptacle body and the receptacle body is oriented with the first end being engaged with and supported by the removable base;

an annular shoulder formed from a side wall of the receptacle body and spaced apart from a rim of the second end in a direction toward the first end; and

a removable seal being initially in sealing engagement with the shoulder, the removable seal being openable to allow access to the fluid from the second end.

2. The bottle according to claim 1, wherein the annular shoulder includes an annular groove which opens toward the second end.

3. The bottle according to claim 2, wherein the annular groove is adjacent the side wall of the receptacle body.

4. The bottle according to claim 1, wherein the annular shoulder includes an annular projection which projects toward the second end.

5. The bottle according to any one of the preceding claims, further comprising a removable closure fitted to the first end of the receptacle body.

6. The bottle according to any one of claims 1 to 4, wherein the first end is sealed by an end wall of the receptacle body.

7. The bottle according to any one of the preceding claims, wherein the removable base includes an annular skirting flange arranged to receive the second end in the initial condition, and a central recess arranged to fittingly receive the removable closure in the converted condition.

8. The bottle according to claim 8, wherein the removable base includes an annular channel immediately inside and adjacent the annular skirting flange, the annular channel being arranged to fittingly receive the rim of the second end so as to reseal the receptacle body in a resealed condition.

9. The bottle according to any one of the preceding claims, wherein the removable base is screwably engageable with the second end of the receptacle body.

10. The bottle according to claim 7 or claim 8, wherein the removable base includes a pedestal in which the central recess is formed, the pedestal having a height so as to substantially extend between an outer face of the removable base and a face of the removable seal in the initial condition.

11. The bottle according to any one of the preceding claims, wherein, in the initial position, a portion of the removable base presses against the removable seal where the removable seal is in sealing engagement with the shoulder.

12. The bottle according to claim 10, wherein the pedestal engages with and supports the removable seal in the initial condition.

13. The bottle according to any one of the previous claims, wherein the receptacle body is shaped as a wine bottle having a neck that terminates at the first end.

14. The bottle according to any one of the preceding claims, wherein the removable seal includes a handle accessible in the converted condition to open the removable seal.

15. A method of converting a bottle into a drinking glass, the method including the steps of:

removing the removable base from the second end of the receptacle body of the bottle according to claim 1;

inserting the first end of the receptacle body into a recess in the removable base such that the removable base is able to support the receptacle body in an inverted condition with the second end oriented vertically upwardly; and

removing the removable seal from within the second end to allow drinking of the fluid from the second end.

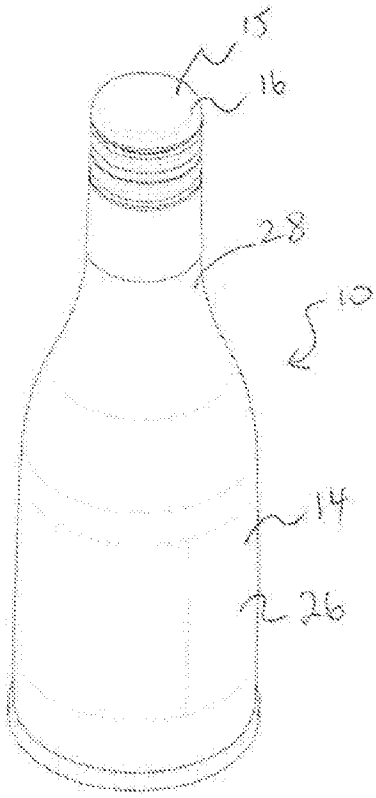

Figure 1

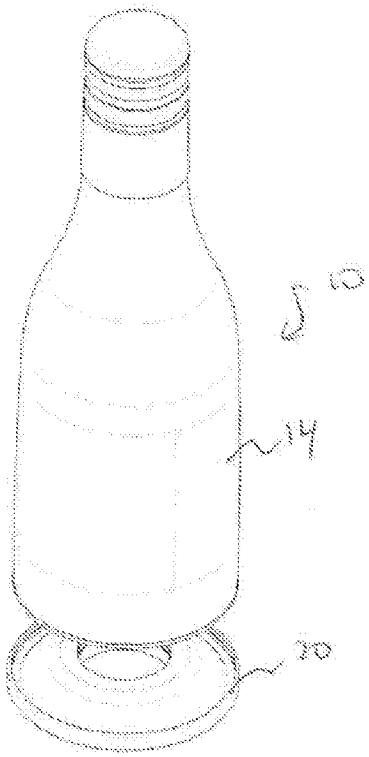

Figure 2

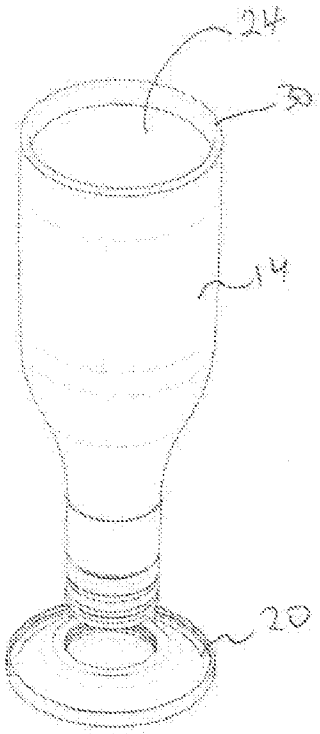

Figure 3

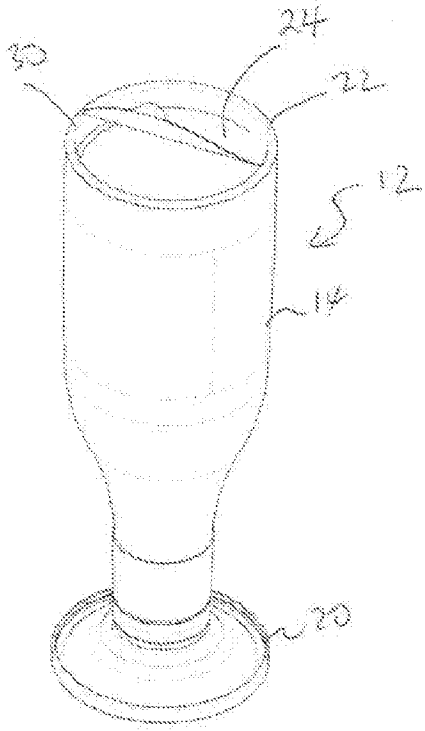

Figure 4

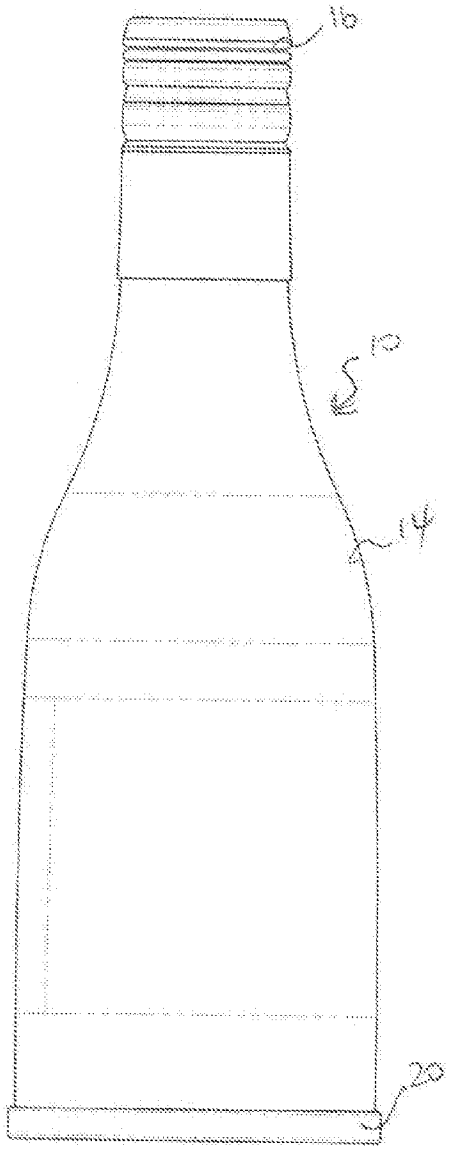

Figure 5

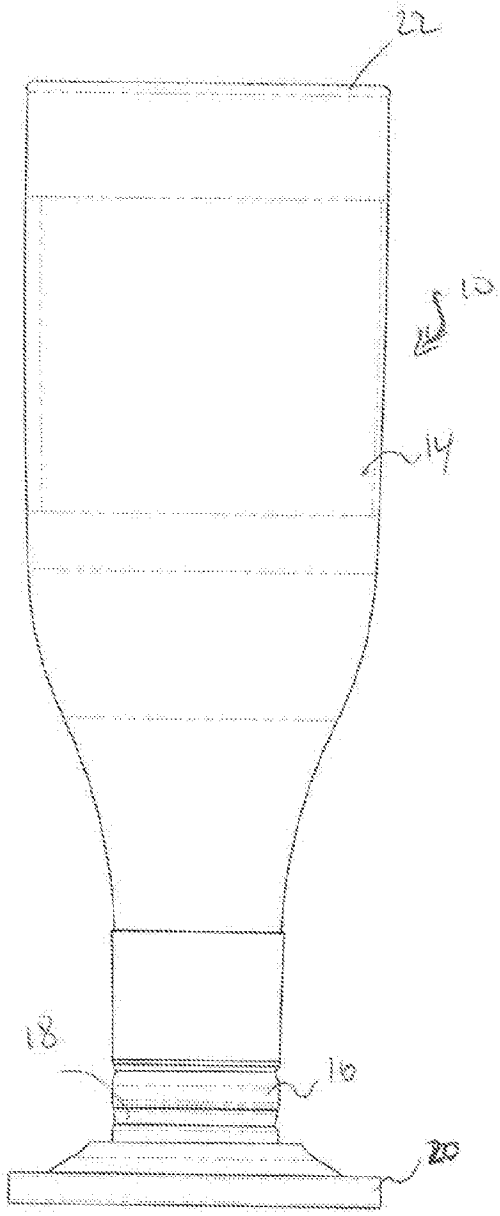

Figure 6

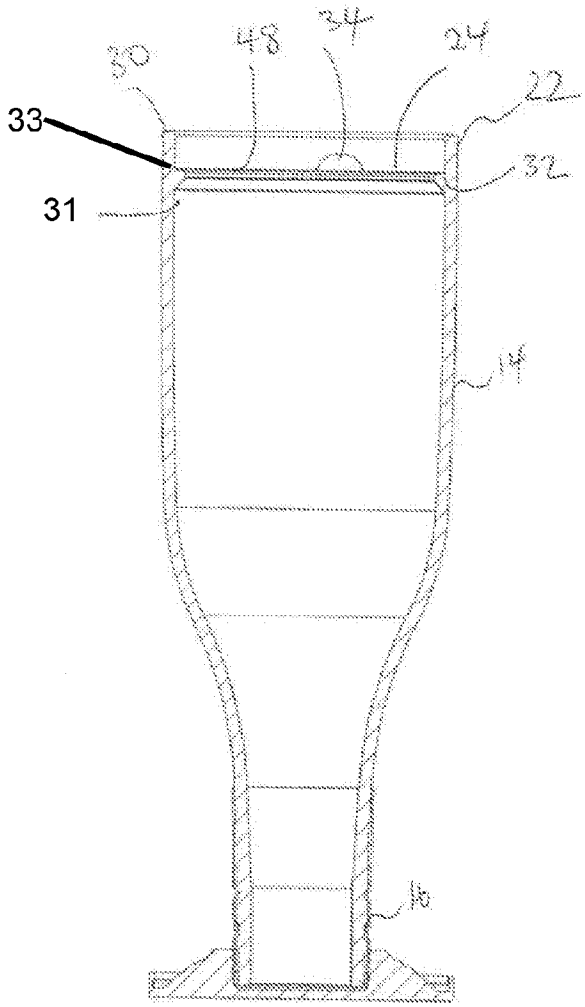

Figure 7

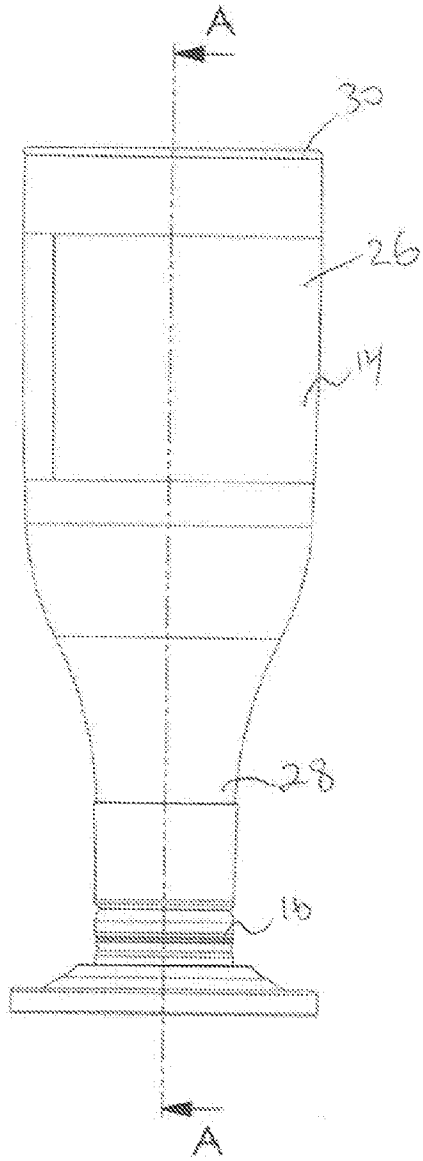

Figure 8

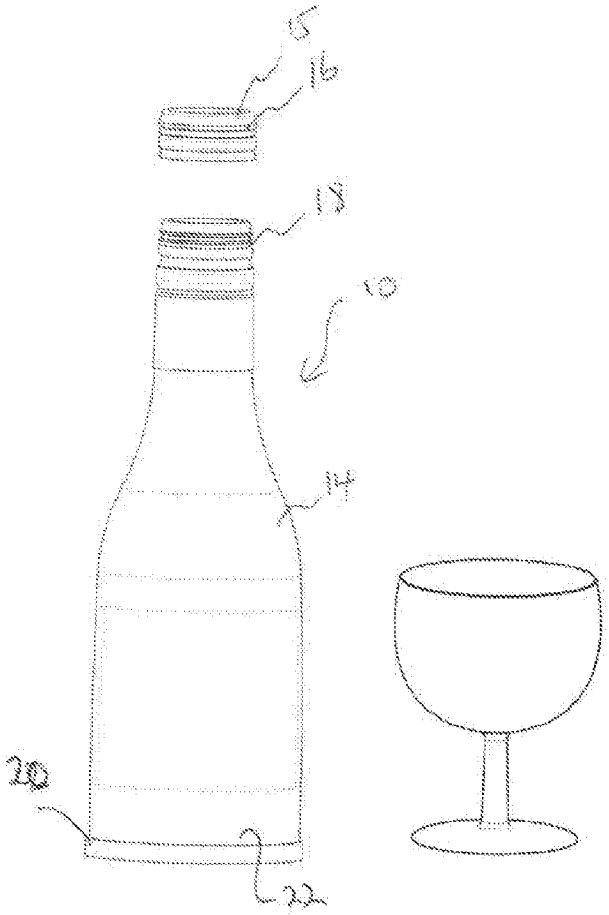

Figure 9

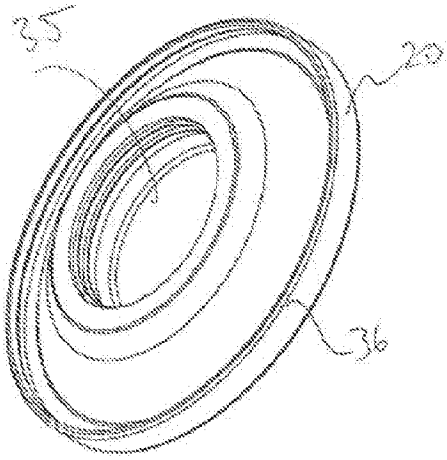

Figure 10

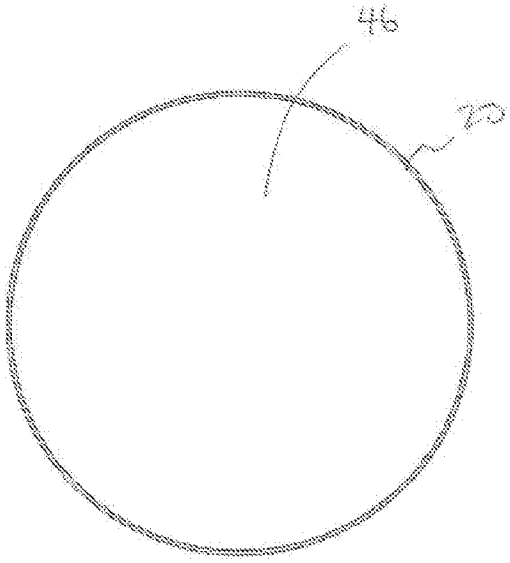

Figure 11

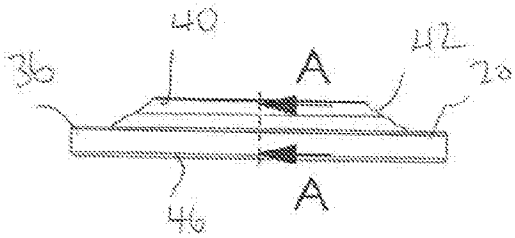

Figure 12

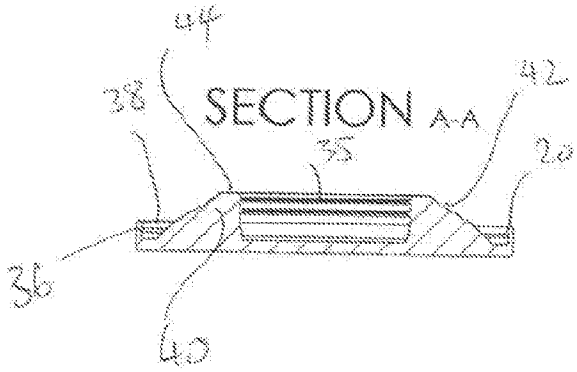

Figure 13

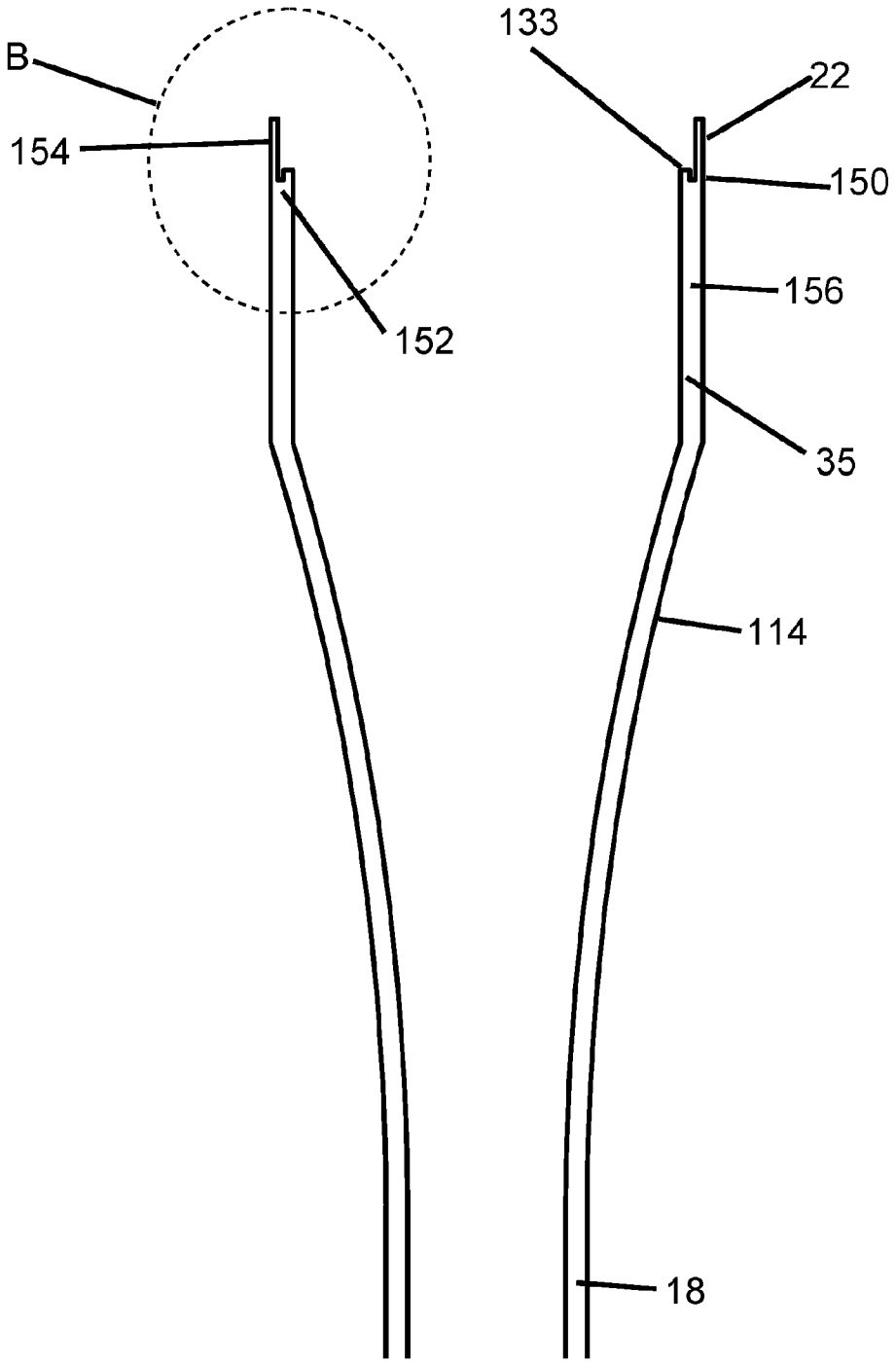

Figure 14

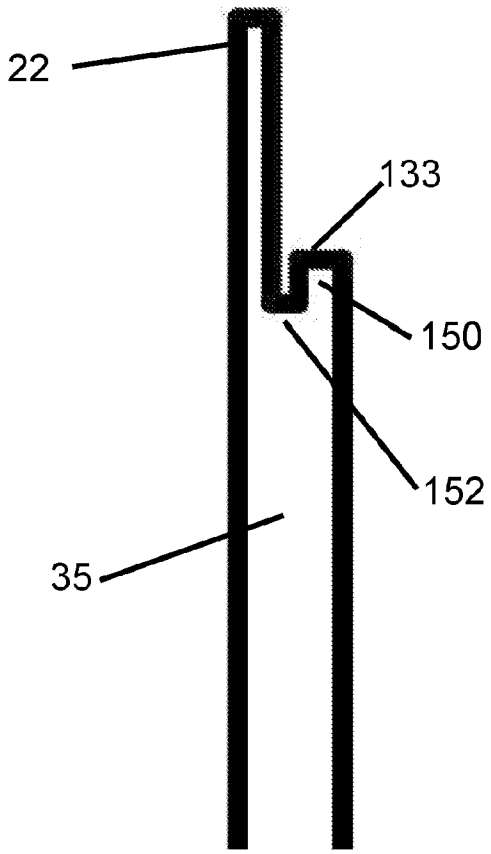

Figure 15

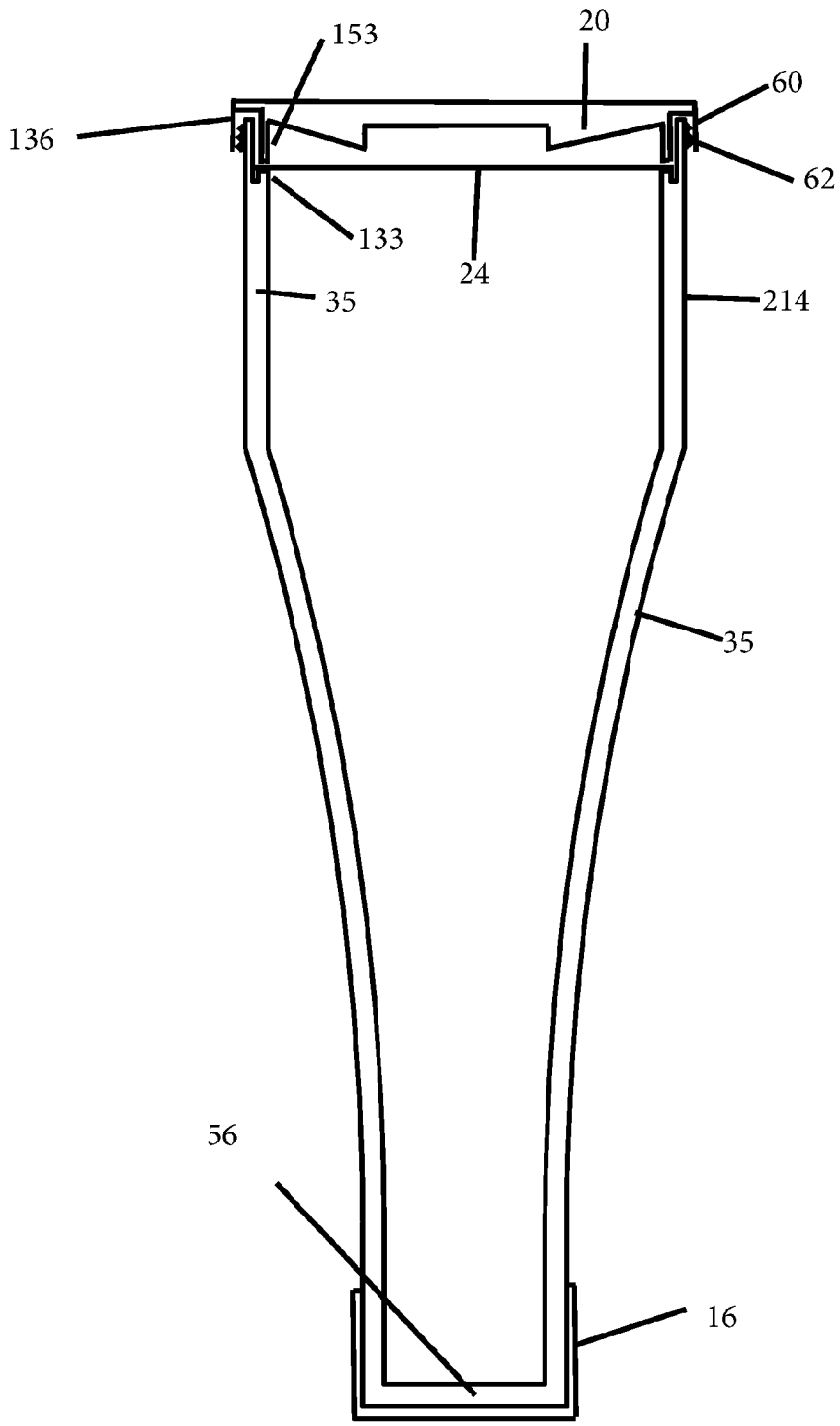

Figure 16

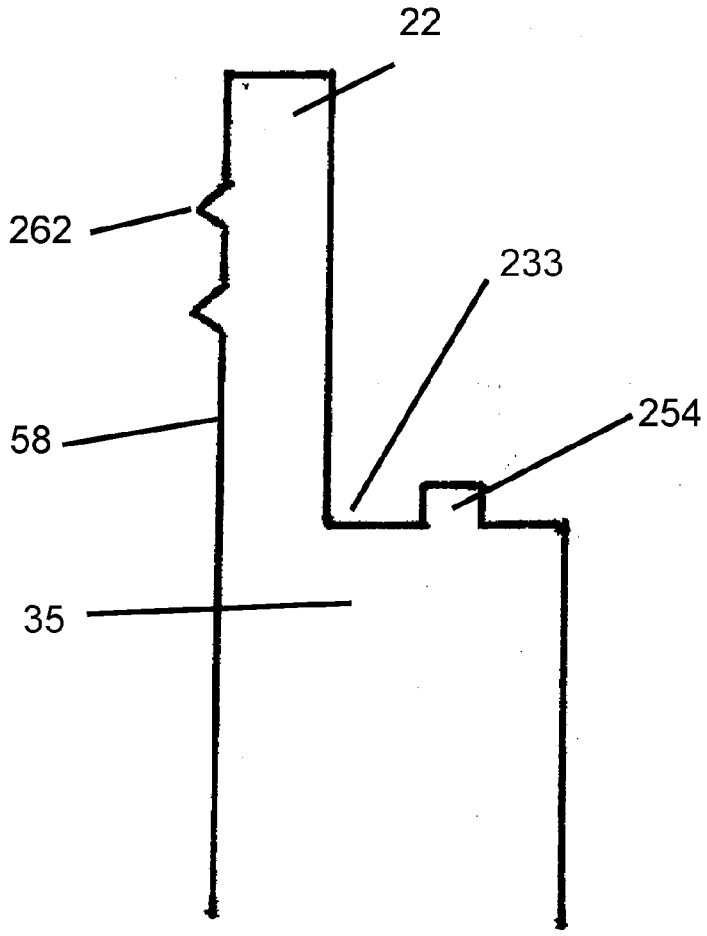

Figure 17

INTERNATIONAL SEARCH REPORT

International application No.
PCT/AU2018/050196

A. CLASSIFICATION OF SUBJECT MATTER

A47G 19/22 (2006.01) B65D 1/06 (2006.01)

According to International Patent Classification (IPC) or to both national classification and IPC

B. FIELDS SEARCHED

Minimum documentation searched (classification system followed by classification symbols)

Documentation searched other than minimum documentation to the extent that such documents are included in the fields searched

Electronic data base consulted during the international search (name of data base and, where practicable, search terms used)

PATENW: IPC/CPC/LOW: A47G19/2255, B65D11/04, B65D51/249, B65D81/36, B65D1/06, B65D25/50, B65D43/02, B65D39/08, A47G19/- & Keywords: convert, transform, bottle, cup, annular, circular, seal, film, shoulder, ledge, foot, lid, base, pedestal and similar terms; See Search Information for details.

WPIAP, EPODOC, ESPACENET, Internal databases provided by IP Australia - Inventor/Applicant Name(s): "ROGERS CANDICE"

C. DOCUMENTS CONSIDERED TO BE RELEVANT

Category*	Citation of document, with indication, where appropriate, of the relevant passages	Relevant to claim No.
	Documents are listed in the continuation of Box C	

[X] Further documents are listed in the continuation of Box C [X] See patent family annex

* Special categories of cited documents:

"A" document defining the general state of the art which is not considered to be of particular relevance

"E" earlier application or patent but published on or after the international filing date

"L" document which may throw doubts on priority claim(s) or which is cited to establish the publication date of another citation or other special reason (as specified)

"O" document referring to an oral disclosure, use, exhibition or other means

"P" document published prior to the international filing date but later than the priority date claimed

"T" later document published after the international filing date or priority date and not in conflict with the application but cited to understand the principle or theory underlying the invention

"X" document of particular relevance; the claimed invention cannot be considered novel or cannot be considered to involve an inventive step when the document is taken alone

"Y" document of particular relevance; the claimed invention cannot be considered to involve an inventive step when the document is combined with one or more other such documents, such combination being obvious to a person skilled in the art

"&" document member of the same patent family

Date of the actual completion of the international search	Date of mailing of the international search report
23 April 2018	23 April 2018
Name and mailing address of the ISA/AU	**Authorised officer**
AUSTRALIAN PATENT OFFICE PO BOX 200, WODEN ACT 2606, AUSTRALIA Email address: pct@ipaustralia.gov.au	Eng Wei Soo AUSTRALIAN PATENT OFFICE (ISO 9001 Quality Certified Service) Telephone No. +61262832138

INTERNATIONAL SEARCH REPORT C (Continuation). DOCUMENTS CONSIDERED TO BE RELEVANT		International application No. **PCT/AU2018/050196**
Category*	Citation of document, with indication, where appropriate, of the relevant passages	Relevant to claim No.
Y	WO 2008/020301 A1 (DYE) 21 February 2008 Abstract; figs. 1-3; page 5-7	1-15
Y	US 2014/0332495 A1 (CHOI et al.) 13 November 2014 Abstract; figs. 4(A)-5; paragraphs [0048]-[0057]	1-15
Y	GB 2370555 A (ROSKELL) 03 July 2002 Abstract; figs. 1-6; page 5, line 4-page 7, line 7	1-15
Y	US 3243068 A (HUSTON) 29 March 1966 Fig. 2; col. 1, lines 54-58	1-15
Y	WO 2012/158937 A1 (STACKED WINES, LLC) 22 November 2012 paragraphs [0034], [0035], [0042]-[0044]; figs. 5, 6	1-15

INTERNATIONAL SEARCH REPORT Information on patent family members	International application No. **PCT/AU2018/050196**

This Annex lists known patent family members relating to the patent documents cited in the above-mentioned international search report. The Australian Patent Office is in no way liable for these particulars which are merely given for the purpose of information.

Patent Document/s Cited in Search Report		Patent Family Member/s	
Publication Number	**Publication Date**	**Publication Number**	**Publication Date**
WO 2008/020301 A1	21 February 2008	None	
US 2014/0332495 A1	13 November 2014	None	
GB 2370555 A	03 July 2002	GB 2370555 A	03 Jul 2002
US 3243068 A	29 March 1966	US 3243068 A	29 Mar 1966
WO 2012/158937 A1	22 November 2012	None	

End of Annex

Due to data integration issues this family listing may not include 10 digit Australian applications filed since May 2001.