(12) INTERNATIONAL APPLICATION PUBLISHED UNDER THE PATENT COOPERATION TREATY (PCT)

(19) World Intellectual Property Organization
International Bureau

(43) International Publication Date
21 January 2021 (21.01.2021)

WIPO | PCT

(10) International Publication Number
WO 2021/011738 A1

(51) International Patent Classification:
A61B 5/145 (2006.01)

(21) International Application Number:
PCT/US2020/042269

(22) International Filing Date:
16 July 2020 (16.07.2020)

(25) Filing Language: English

(26) Publication Language: English

(30) Priority Data:

62/874,928	16 July 2019 (16.07.2019)	US
62/874,934	16 July 2019 (16.07.2019)	US
62/874,950	16 July 2019 (16.07.2019)	US
62/874,954	16 July 2019 (16.07.2019)	US
62/874,959	16 July 2019 (16.07.2019)	US
62/874,964	16 July 2019 (16.07.2019)	US
62/874,968	16 July 2019 (16.07.2019)	US
62/874,972	16 July 2019 (16.07.2019)	US
62/874,975	16 July 2019 (16.07.2019)	US
62/874,977	16 July 2019 (16.07.2019)	US
62/910,970	04 October 2019 (04.10.2019)	US
62/911,017	04 October 2019 (04.10.2019)	US
62/911,143	04 October 2019 (04.10.2019)	US
62/987,842	10 March 2020 (10.03.2020)	US
63/037,472	10 June 2020 (10.06.2020)	US
PCT/US2020/042195	15 July 2020 (15.07.2020)	US
PCT/US2020/042198	15 July 2020 (15.07.2020)	US

(71) Applicant: **BETA BIONICS, INC.** [US/US]; 300 Concord, Suite 301, Concord, Massachusetts 01742 (US).

(72) Inventors; and

(71) Applicants: **EL-KHATIB, Firas, H.** [US/US]; 59 Brainerd Road, Apt 218, Alston, Massachusetts 02134 (US). **DAMIANO, Edward, R.** [US/US]; 22 Putnam Road, Acton, Massachusetts 01720 (US). **RASKIN, Edward, B.** [US/US]; 104 Tandem, Irvine, California 92618 (US).

(74) Agent: **ALTMAN, Daniel, E.**; KNOBBE, MARTENS, OLSON & BEAR, LLP , 2040 Main Street, 14th Floor, Irvine, California 92614 (US).

(81) Designated States *(unless otherwise indicated, for every kind of national protection available)*: AE, AG, AL, AM, AO, AT, AU, AZ, BA, BB, BG, BH, BN, BR, BW, BY, BZ, CA, CH, CL, CN, CO, CR, CU, CZ, DE, DJ, DK, DM, DO, DZ, EC, EE, EG, ES, FI, GB, GD, GE, GH, GM, GT, HN, HR, HU, ID, IL, IN, IR, IS, IT, JO, JP, KE, KG, KH, KN, KP, KR, KW, KZ, LA, LC, LK, LR, LS, LU, LY, MA, MD, ME, MG, MK, MN, MW, MX, MY, MZ, NA, NG, NI, NO,

(54) Title: BLOOD GLUCOSE CONTROL SYSTEM

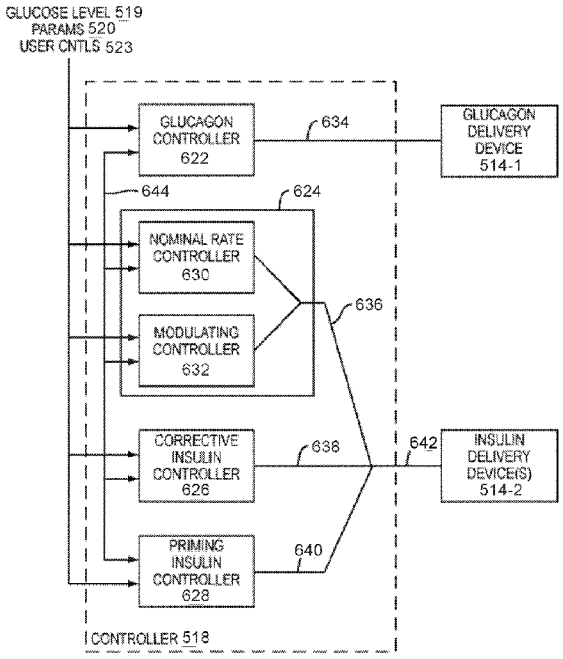

FIG. 6

(57) Abstract: A glucose level control system can autonomously modify therapy provided to a subject based on a comparison of the effect of different values for a control parameter. The system can deliver therapy to the subject during a first therapy period using a first value for the control parameter and determine a corresponding first effect to the first therapy by analyzing glycemic control of blood glucose in the subject. The system may autonomously generate a second value for the control parameter, and determine a second effect corresponding to a second therapy provided during a second time period using the second value. By comparing the effects of the two therapy periods, a value for the control parameter that provides improved blood glucose level management can be determined.

WO 2021/011738 A1

[Continued on next page]

NZ, OM, PA, PE, PG, PH, PL, PT, QA, RO, RS, RU, RW, SA, SC, SD, SE, SG, SK, SL, ST, SV, SY, TH, TJ, TM, TN, TR, TT, TZ, UA, UG, US, UZ, VC, VN, WS, ZA, ZM, ZW.

(84) **Designated States** *(unless otherwise indicated, for every kind of regional protection available)*: ARIPO (BW, GH, GM, KE, LR, LS, MW, MZ, NA, RW, SD, SL, ST, SZ, TZ, UG, ZM, ZW), Eurasian (AM, AZ, BY, KG, KZ, RU, TJ, TM), European (AL, AT, BE, BG, CH, CY, CZ, DE, DK, EE, ES, FI, FR, GB, GR, HR, HU, IE, IS, IT, LT, LU, LV, MC, MK, MT, NL, NO, PL, PT, RO, RS, SE, SI, SK, SM, TR), OAPI (BF, BJ, CF, CG, CI, CM, GA, GN, GQ, GW, KM, ML, MR, NE, SN, TD, TG).

Published:

— *with international search report (Art. 21(3))*

BLOOD GLUCOSE CONTROL SYSTEM

INCORPORATION BY REFERENCE TO ANY PRIORITY APPLICATIONS

[0001] This application claims the benefit of U.S. Provisional Patent Application Nos. 62/987,842, filed March 10, 2020; 63/037,472, filed June 10, 2020; 62/874,928, filed July 16, 2019; 62/874,934, filed July 16, 2019; 62/874,950, filed July 16, 2019; 62/874,954, filed July 16, 2019; 62/874,959, filed July 16, 2019; 62/874,964, filed July 16, 2019; 62/874,968, filed July 16, 2019; 62/874,972, filed July 16, 2019; 62/874,975, filed July 16, 2019; 62/874,977, filed July 16, 2019; 62/910,970, filed October 4, 2019; 62/911,017, filed October 4, 2019; and 62/911,143, filed October 4, 2019. Further, this application claims the benefit of priority International Patent Application Nos. PCT/US2020/042198, filed July 15, 2020; and PCT/US2020/042195, filed July 15, 2020. The entire contents of each application referenced in this paragraph are incorporated by reference herein and made part of this specification. Any and all applications for which a foreign or domestic priority claim is identified in the Application Data Sheet as filed with the present application are hereby incorporated by reference under 37 CFR 1.57.

TECHNICAL FIELD

[0002] The present disclosure relates to ambulatory medical devices, such as blood glucose control systems, that provide therapy to a subject.

BACKGROUND

[0003] Sustained delivery, pump driven medicament injection devices generally include a delivery cannula mounted in a subcutaneous manner through the skin of the patient at an infusion site. The pump draws medicine from a reservoir and delivers it to the patient via the cannula. The injection device typically includes a channel that transmits a medicament from an inlet port to the delivery cannula which results in delivery to the subcutaneous tissue layer where the delivery cannula terminates. Some infusion devices are configured to deliver one medicament to a patient while others are configured to deliver multiple medicaments to a patient.

SUMMARY

[0004] The systems, methods and devices of this disclosure each have several innovative aspects, no single one of which is solely responsible for the all of the desirable attributes disclosed herein. Details of one or more implementations of the subject matter described in this specification are set forth in the accompanying drawings and the description below.

[0005] Certain embodiments disclosed herein relate to a computer-implemented method of generating an indication of total carbohydrate therapy over a period in a subject using a medicament pump configured to deliver at least insulin therapy to the subject. The method may be performed by a hardware processor configured to generate dose control signals for the medicament pump configured to deliver at least insulin therapy to the subject. The method may include receiving a glucose level of the subject and determining based at least in part on the glucose level that a triggering event for raising blood glucose level of the subject has occurred. The triggering event may comprise determining that an impending risk of hypoglycemia is present in the subject or that an episode of hypoglycemia is present in the subject. The method may further include determining an amount of a counter-regulatory agent to respond to the impending risk of hypoglycemia or the episode of hypoglycemia. Further, the method may include determining a dose of carbohydrate therapy based at least in part on the amount of the counter-regulatory agent. Additionally, the method may include tracking, over a period comprising a plurality of hypoglycemia risk events or hypoglycemia episodes, determined doses of carbohydrate therapy to generate the indication of total carbohydrate therapy over the period. The method may include outputting the indication of total carbohydrate therapy.

[0006] Additional embodiments of the present disclosure relate to an automated blood glucose control system configured to generate an indication of total carbohydrate therapy over a period in a subject. The automated blood glucose control system may include a medicament delivery interface configured to operatively connect to a medicament pump configured to infuse medicament into the subject. The medicament may comprise at least insulin. Further, the automated blood glucose control system may include a memory configured to store specific computer-executable instructions, and a hardware processor in communication with the memory and configured to execute the specific computer-executable

instructions to at least: receive a glucose level of the subject; determine based at least in part on the glucose level that a triggering event for raising blood glucose level of the subject has occurred, wherein the triggering event comprises that an impending risk of hypoglycemia is present in the subject or that an episode of hypoglycemia is present in the subject; determine an amount of a counter-regulatory agent to respond to the impending risk of hypoglycemia or the episode of hypoglycemia; determine a dose of carbohydrate therapy based at least in part on the amount of the counter-regulatory agent; track, over a period comprising a plurality of hypoglycemia risk events or hypoglycemia episodes, determined doses of carbohydrate therapy to generate the indication of total carbohydrate therapy over the period; and output the indication of total carbohydrate therapy.

[0007] Certain embodiments of the present disclosure relate to an automated blood glucose control system configured to generate a backup therapy protocol comprising insulin therapy instructions derived from autonomously determined doses of insulin. The automated blood glucose control system may include a medicament delivery interface configured to operatively connect to a medicament pump for infusing medicament into the subject. Further, the automated blood glucose control system may include a memory configured to store specific computer-executable instructions, and a hardware processor in communication with the memory and configured to execute the specific computer-executable instructions to at least: receive a glucose level signal from a sensor operatively configured to determine glucose levels in the subject; generate a dose control signal using a control algorithm configured to autonomously determine doses of insulin to be infused into the subject for the purpose of controlling blood glucose of the subject based at least in part on the glucose level signal; track insulin therapy administered to the subject over a tracking period comprising at least one day by the automated blood glucose control system, wherein tracking the insulin therapy comprises storing an indication of the autonomously determined doses of insulin delivered to the subject as basal insulin, correction boluses of insulin, or as mealtime boluses of insulin; generate at least one of a backup injection therapy protocol or a backup pump therapy protocol comprising insulin therapy instructions based at least in part on the insulin therapy administered to the subject over the tracking period; and output the at least one of the backup injection therapy protocol or the backup pump therapy protocol on a display enabling therapy to be maintained

at a rate determined by the automated blood glucose control system when the automated blood glucose control system is not providing therapy to the subject.

[0008] Additional embodiments of the present disclosure relate to a computer-implemented method of generating a backup therapy protocol comprising insulin therapy instructions derived from autonomously determined doses of insulin determined by an automated blood glucose control system. The method may be performed by a hardware processor of the automated blood glucose control system. The method may include receiving a glucose level signal from a sensor operatively configured to determine glucose levels in the subject and generating a dose control signal using a control algorithm configured to autonomously determine doses of insulin to be infused into the subject for the purpose of controlling blood glucose of the subject based at least in part on the glucose level signal. Further, the method may include tracking insulin therapy administered by the automated blood glucose control system to the subject over a tracking period comprising at least one day. Tracking the insulin therapy may comprise storing an indication of the autonomously determined doses of insulin delivered to the subject. Further, the method may include generating at least one of a backup injection therapy protocol or a backup pump therapy protocol comprising insulin therapy instructions based at least in part on the insulin therapy administered to the subject over the tracking period. In addition, the method may include outputting the at least one of the backup injection therapy protocol or the backup pump therapy protocol on a display enabling therapy to be maintained at a rate determined by the automated blood glucose control system when the automated blood glucose control system is not providing therapy to the subject.

[0009] Some embodiments of the present disclosure relate to an automated blood glucose control system configured to generate a report of therapy protocol modifications made by a user of the automated blood glucose control system. The automated blood glucose control system may include a medicament delivery interface configured to operatively connect to a medicament pump for infusing medicament into a subject. Further, the automated blood glucose control system may include a memory configured to store specific computer-executable instructions, a stored control parameter value, and a therapy log. Moreover, the automated blood glucose control system may include a hardware processor in communication with the memory and configured to execute the specific computer-executable instructions to at

least: receive a glucose level signal from a sensor operatively configured to determine glucose levels in the subject; generate a dose control signal using a control algorithm configured to autonomously determine doses of insulin to be infused into the subject for the purpose of controlling blood glucose of the subject based at least in part on the glucose level signal and a control parameter that is modifiable by user interaction with a control parameter selection interface element; track user modifications to the control parameter over a tracking period comprising at least one day, wherein tracking the user modifications comprises storing in the therapy log whether each of the user modifications comprises an increase or a decrease in the control parameter from the stored control parameter value and a time during which each of the user modifications occurred; and generate a report of user modifications to the control parameter, wherein the report comprises a measure of frequency of increases and decreases from the stored control parameter value.

[0010] Certain embodiments of the present disclosure relate to a computer-implemented method of modifying therapy provided to a subject using a blood glucose control system. The method may be performed by a hardware processor configured to generate a dose control signal for the blood glucose control system. Further, the method may include receiving a glucose level signal from a glucose level sensor operatively connected to the subject. Moreover, the method may include causing first therapy to be delivered by the blood glucose control system to a subject during a first therapy period, wherein the first therapy is delivered based at least in part on a first value of a control parameter used by a control algorithm to generate the dose control signal. The control parameter may be used by the control algorithm to account for accumulation of insulin in the subject, thereby controlling an insulin dosing response of the control algorithm to a blood glucose excursion in the subject as indicated by the glucose level signal. Further, the method may include determining a first effect corresponding at least in part to the first therapy. Determining the first effect may comprise analyzing glycemic control of blood glucose in the subject as indicated by the glucose level signal. Moreover, the method may include autonomously generating a second value of the control parameter. The autonomously generated second value may be determined as a function based on the first value and the first effect. In addition, the method may include modifying the control parameter from the first value to the second value and causing second therapy to be delivered by the blood glucose control system to the subject during a second therapy period.

The second therapy may be delivered based at least in part on the second value of the control parameter. Further, changing the control parameter may modify the therapy provided to the subject.

[0011] Additional embodiments of the present disclosure relate to a computer-implemented method of modifying therapy provided to a subject using a blood glucose control system. The method may be performed by a hardware processor configured to generate a dose control signal for the blood glucose control system. The method may include causing first therapy to be delivered by the blood glucose control system to a subject during a first therapy period. The first therapy may be delivered based at least in part on a first value of a control parameter used by a control algorithm to generate the dose control signal. The method may further include determining a first effect corresponding at least in part to the first therapy. Determining the first effect may comprise receiving a glucose level signal from a glucose level sensor operatively connected to the subject. Further, the method may include autonomously generating a second value of the control parameter based at least in part on a baseline value of the control parameter and an output of a function defined based on glycemic control of the subject. The glucose level signal may comprise an indication of the glycemic control of the subject during the first therapy period. Moreover, the method may include modifying the control parameter from the first value to the second value and causing second therapy to be delivered by the blood glucose control system to the subject during a second therapy period. The second therapy may be delivered based at least in part on the second value of the control parameter. Changing the control parameter may include modifying the therapy provided to the subject.

[0012] Some embodiments of the present disclosure relate to a computer-implemented method of modifying therapy provided to a subject using a blood glucose control system. The method may be implemented by a hardware processor configured to generate a dose control signal for the blood glucose control system. The method may include causing first therapy to be delivered by the blood glucose control system to a subject during a first therapy period. The first therapy may be delivered based at least in part on a first value of a control parameter used by a control algorithm to generate the dose control signal. The method may further include determining a first effect corresponding at least in part to the first therapy. Determining the first effect may comprise receiving a glucose level signal from a glucose level

sensor operatively connected to the subject. Further, the method may include autonomously generating a second value of the control parameter. The autonomously generated second value may be determined as a function based at least in part on a baseline value. Moreover, the method may include modifying the control parameter from the first value to the second value. The method may further include causing second therapy to be delivered by the blood glucose control system to the subject during a second therapy period. The second therapy may be delivered based at least in part on the second value of the control parameter. Further, changing the control parameter may include modifying the therapy provided to the subject. The method may further include determining a second effect corresponding at least in part to the second therapy and autonomously performing a comparison of the first effect and the second effect without action by a human. Further, the method may include selecting one of the first value of the control parameter or the second value of the control parameter as an active control parameter value based at least in part on the comparison of the first effect and the second effect. Moreover, the method may include configuring the blood glucose control system to provide therapy to the subject during a third therapy period based at least in part on the active control parameter value. The selection of the active control parameter value may modify the therapy provided to the subject.

[0013] Moreover, any of the aforementioned embodiments may be combined. For example, a single automated blood glucose control system may be configured to implement one or more of the aforementioned embodiments.

BRIEF DESCRIPTION OF THE DRAWINGS

[0014] Throughout the drawings, reference numbers are re-used to indicate correspondence between referenced elements. The drawings are provided to illustrate certain aspects of the subject matter described herein and not to limit the scope thereof.

[0015] Figure 1A illustrates an example blood glucose control system that provides blood glucose control via an ambulatory medicament pump.

[0016] Figure 1B illustrates another example blood glucose control system that provides blood glucose control via an ambulatory medicament pump.

[0017] Figure 1C illustrates a further example blood glucose control system that provides blood glucose control via an ambulatory medicament pump.

[0018] Figure 2A shows a block diagram of an example blood glucose control system.

[0019] Figure 2B shows a block diagram of another example blood glucose control system.

[0020] Figure 2C shows a block diagram of another example blood glucose control system.

[0021] Figure 2D shows a block diagram of another example blood glucose control system.

[0022] Figure 3 is a schematic of an example glucose control system that includes an electronic communications interface.

[0023] Figure 4A shows a block diagram of an example blood glucose control system in online operation mode.

[0024] Figure 4B shows a block diagram of an example blood glucose control system in offline operation mode.

[0025] Figure 5 illustrates a block diagram of a glucose control system in accordance with certain embodiments.

[0026] Figure 6 illustrates a block diagram of a controller system in accordance with certain embodiments.

[0027] Figure 7 presents a flowchart of an example carbohydrate therapy equivalence tracking process in accordance with certain embodiments.

[0028] Figure 8 presents a flowchart of an example backup therapy protocol generation process in accordance with certain embodiments.

[0029] Figure 9 presents a flowchart of an example control parameter modification tracking process in accordance with certain embodiments.

[0030] Figure 10 illustrates an example backup therapy protocol in accordance with certain embodiments.

[0031] Figure 11 illustrates an example control parameter modification report in accordance with certain embodiments.

[0032] Figure 12 illustrates an example meal selection report that may be included as part of some implementations of the control parameter modification report of Figure 11 in accordance with certain embodiments.

[0033] Figure 13 presents a flowchart of an example automated blood glucose control refinement process in accordance with certain embodiments.

[0034] Figure 14A illustrates a simulation of blood glucose control of a subject with Tmax set to 65 minutes.

[0035] Figure 14B illustrates a simulation of blood glucose control of a subject with Tmax set to 15 minutes.

[0036] Figure 14C illustrates a simulation of blood glucose control of a subject with Tmax set to 130 minutes.

DETAILED DESCRIPTION

[0037] Some embodiments described herein pertain to medicament infusion systems for one or more medicaments and the components of such systems (e.g., infusion pumps, medicament cartridges, cartridge connectors, lumen assemblies, infusion connectors, infusion sets, etc.). Some embodiments pertain to methods of manufacturing infusion systems and components thereof. Some embodiments pertain to methods of using any of the foregoing systems or components for infusing one or more medicaments (e.g., pharmaceutical, hormone, etc.) to a patient. As an exemplary illustration, an infusion system may include an infusion pump, which can include one or more medicament cartridges or can have an integrated reservoir of medicament. An infusion system may include medicament cartridges and cartridge connectors, but not a pump. An infusion system may include cartridge connectors and an infusion pump, but not medicament cartridges. An infusion system may include infusion connectors, a lumen assembly, cartridge connectors, an infusion pump, but not medicament cartridges or an infusion set. A blood glucose control system can operate in conjunction with an infusion system to infuse one or more medicaments, including at least one blood glucose control agent, into a subject. Any feature, structure, component, material, step, or method that is described and/or illustrated in any embodiment in this specification can be used with or instead of any feature, structure, component, material, step, or method that is described and/or illustrated in any other embodiment in this specification. Additionally, any feature, structure, component, material, step, or method that is described and/or illustrated in one embodiment may be absent from another embodiment.

Blood Glucose Control System Overview

[0038] Blood glucose control systems are used to control blood glucose level in a subject. Blood glucose control systems can include a controller configured to generate dose control signals for one or more glucose control agents that can be infused into the subject. Glucose control agents include regulatory agents that tend to decrease blood glucose level, such as insulin and insulin analogs, and counter-regulatory agents that tend to increase blood glucose level, such as glucagon or dextrose. A blood glucose control system configured to be used with two or more glucose control agents can generate a dose control signal for each of the agents. In some embodiments, a blood glucose control system can generate a dose control signal for an agent even though the agent may not be available for dosing via a medicament pump connected to the subject.

[0039] Glucose control agents can be delivered to a subject via subcutaneous injection, via intravenous injection, or via another suitable delivery method. In the case of blood glucose control therapy via an ambulatory medicament pump, subcutaneous injection is most common. An ambulatory medicament pump 100 is a type of ambulatory medical device, which is sometimes referred to herein as an ambulatory device, an ambulatory medicament device, a mobile ambulatory device, or an AMD. Ambulatory medical devices include ambulatory medicament pumps and other devices configured to be carried by a subject and to deliver therapy to the subject.

[0040] In some examples, the ambulatory medical device (AMD) is an electrical stimulation device, and therapy delivery includes providing electrical stimulation to a subject. An example of an electrical stimulation device is a cardiac pacemaker. A cardiac pacemaker generates electrical stimulation of the cardiac muscle to control heart rhythms. Another example of an electrical stimulation device is a deep brain stimulator to treat Parkinson's disease or movement disorders.

[0041] FIGS. 1A-1C show examples of blood glucose control systems that provide blood glucose control via an ambulatory medicament pump connected to a subject. In FIG. 1A, the medicament pump 100 is connected to an infusion site 102 using an infusion set 104. The medicament pump has integrated pump controls 106a that permit a user to view pump data and change therapy settings via user interaction with the pump controls 106a. A glucose level sensor 110 generates a glucose level signal that is received by the blood glucose control system.

[0042] In FIG. 1B, the medicament pump 100 communicates with an external electronic device 108 (such as, for example, a smartphone) via a wireless data connection. At least some of the pump controls 106a and 106b can be manipulated via user interaction with user interface elements of the external electronic device 108. The glucose level sensor 110 can also communicate with the medicament pump 100 via a wireless data connection.

[0043] In FIG. 1C, the medicament pump 100 includes an integrated cannula that inserts into the infusion site 102 without a separate infusion set. At least some of the pump controls 106b can be manipulated via user interaction with user interface elements of an external electronic device 108. In some instances, pump controls can be manipulated via user interaction with user interface elements generated by a remote computing environment (not shown), such as, for example, a cloud computing service, that connects to the medicament pump 100 via a direct or indirect electronic data connection.

[0044] Glucose control systems typically include a user interface configured to provide one or more of therapy information, glucose level information, and/or therapy control elements capable of changing therapy settings via user interaction with interface controls. The user interface can be implemented via an electronic device that includes a display and one or more buttons, switches, dials, capacitive touch interfaces, or touchscreen interfaces. In some embodiments, at least a portion of the user interface is integrated with an ambulatory medicament pump that can be tethered to a body of a subject via an infusion set configured to facilitate subcutaneous injection of one or more glucose control agents. In certain embodiments, at least a portion of the user interface is implemented via an electronic device separate from the ambulatory medicament pump, such as a smartphone.

[0045] FIGS. 2A-2D illustrate block diagrams showing example configurations of a glucose control system 200. As shown in FIG. 2A, a glucose control system 200a can include a controller 202a having an electronic processor 204a and a memory 210a that stores instructions 208a executable by the processor 204a. The controller 202a and a pump 212 can be integrated with into an ambulatory medical device (AMD) 100. The AMD 100 can include a transceiver 214a for wireless digital data communications with external electronic devices. When the instructions 208a stored in memory 210a are executed by the electronic processor 204a, the controller 202a can implement at least a portion of a control algorithm that generates dose control signals for one or more glucose control agents based on time-varying glucose

levels of the subject and one or more control parameters. The dose control signals, when delivered to the pump 212, result in dosing operations that control the blood glucose of a subject.

[0046] As shown in FIG. 2B, a glucose control system 200b can operate at least partially via execution of instructions 208b by an electronic processor 204b of an electronic device 108 separate from the ambulatory medical device 100. The electronic device 108 can include a transceiver 214b capable of establishing a wireless digital data connection to the AMD 100, and a controller 202b can implement at least a portion of a control algorithm via execution of instructions 208b stored in memory 210b. When the instructions 208b stored in memory 210b are executed by the electronic processor 204b, the controller 202b can implement at least a portion of a control algorithm that generates dose control signals for one or more glucose control agents based on time-varying glucose levels of the subject and one or more control parameters. The dose control signals, when delivered to the pump 212, result in dosing operations that control the blood glucose of a subject. In some embodiments, the dose control signals are transmitted from the device transceiver 214b to the AMD transceiver 214a over a short-range wireless data connection 216. The AMD 100 receives the dose control signals and passes them to the pump 212 for dosing operations.

[0047] As shown in FIG. 2C, a glucose control system 200c can operate at least partially via execution of instructions 208c on an electronic processor 204c integrated with a remote computer 206, such as, for example, a cloud service. When the instructions 208c stored in memory 210c are executed by the electronic processor 204c, the controller 202c can implement at least a portion of a control algorithm that generates dose control signals for one or more glucose control agents based on time-varying glucose levels of the subject and one or more control parameters. The dose control signals, when delivered to the pump 212, result in dosing operations that control the blood glucose of a subject. In some embodiments, the dose control signals are transmitted from the remote computer WAN connection interface 220c to the AMD WAN connection interface 220a over an end-to-end wireless data connection 218. The AMD 100 receives the dose control signals and passes them to the pump 212 for dosing operations.

[0048] As shown in FIG. 2D, a glucose control system 200d can have two or more controllers 202a, 202b, 202c that cooperate to generate a dose control signal for dosing

operations by the pump 212. A remote computer 206 can transmit or receive data or instructions passed through a WAN connection interface 220c via a WAN wireless data connection 218 to a WAN connection interface 220b of an electronic device 108. The electronic device 108 can transmit or receive data or instructions passed through a transceiver 214b via a short-range wireless data connection 216 to a transceiver 214a of an AMD 100. In some embodiments, the electronic device can be omitted, and the controllers 202a, 202c of the AMD 100 and the remote computer 206 cooperate to generate dose control signals that are passed to the pump 212. In such embodiments, the AMD 100 may have its own WAN connection interface 220a to support a direct end-to-end wireless data connection to the remote computer 206.

[0049] As shown in FIG. 3, in some embodiments, the glucose control system 200 includes circuitry that implements an electronic communications interface (ECI) 302 configured to send and receive electronic data from one or more electronic devices. The ECI includes a sensor interface 304 configured to receive a glucose level signal from a sensor 110 such as a continuous glucose monitor (CGM). Some CGMs generate the glucose level signal at fixed measurement intervals, such as five-minute intervals. The sensor 110 can be operatively connected to a subject in order to generate a glucose level signal that corresponds to a blood glucose estimate or measurement of the subject. The glucose level signal can be used by the controller 202 to generate a dose control signal. The dose control signal can be provided to a pump 212 via a pump interface 306. In some embodiments, the sensor interface 304 connects to the sensor 110 via a short-range wireless connection 308. In some embodiments, the pump interface 306 connects to the pump 212 via a short-range wireless connection 310. In other embodiments, the pump interface 306 connects to the pump 212 via a local data bus, such as when the controller 202, the ECI 306, and the pump 212 are integrated into an AMD 100.

[0050] The controller can be configured to generate the dose control signal using a control algorithm that generates at least one of a basal dose, a correction dose, and/or a meal dose. Examples of control algorithms that can be used to generate these doses are disclosed in U.S. Patent Application Publication Nos. 2008/0208113, 2013/0245547, 2016/0331898, and 2018/0220942 (referenced herein as the "Controller Disclosures"), the entire contents of which are incorporated by reference herein and made a part of this specification. The correction dose

can include regulatory or counter-regulatory agent and can be generated using a model-predictive control (MPC) algorithm such as the one disclosed in the Controller Disclosures. The basal dose can include regulatory agent and can be generated using a basal control algorithm such as disclosed in the Controller Disclosures. The meal dose can include regulatory agent and can be generated using a meal control algorithm such as disclosed in the Controller Disclosures. Additional aspects and improvements for at least some of these controllers are disclosed herein. The dose control signal can be transmitted to an infusion motor 306 via the ECI 302 or can be transmitted to the infusion motor 306 via an electrical conductor when the controller 202a is integrated in the same housing as the infusion motor 306.

[0051] As shown in FIG. 4A, the controller 400 can be configured to operate in "online mode" during time periods when the controller receives a glucose level signal 402 from a sensor 110. In online mode, the control algorithm generates a dose control signal 404 that implements regular correction doses based on values of the glucose level signal 402 and control parameters of the control algorithm. The pump 212 is configured to deliver at least correction doses and basal doses to the subject without substantial user intervention while the controller 400 remains in online mode.

[0052] As shown in FIG. 4B, the controller 400 can be configured to operate in "offline mode" during time periods when the controller does not receive a glucose level signal 402 from a sensor 110, at least during periods when the glucose level signal 402 is expected but not received. In offline mode, the control algorithm generates a dose control signal 404 that implements correction doses in response to isolated glucose measurements 406 (such as, for example, measurements obtained from the subject using glucose test strips) and based on control parameters of the control algorithm. The pump 212 is configured to deliver basal doses to the subject without substantial user intervention and can deliver correction doses to the subject in response to isolated glucose measurements 406 while the controller 400 remains in offline mode.

Example Implementation of Glucose Control System

[0053] Figure 5 illustrates an automated glucose control system 510 for regulating the blood glucose level of an animal subject (subject) 512, which may be a human. The automated glucose control system 510 is an example of a medicament infusion system and

may include any of the embodiments previously described above with respect to medicament infusion systems.

[0054] The subject 512 may receive doses of insulin from one or more delivery devices 514, for example infusion pump(s) coupled by catheter(s) to a subcutaneous space of the subject 512. As described below, the delivery devices 514 may also deliver a counter-regulatory agent or hyperglycemic agent, such as glucagon or dextrose, for control of the blood glucose level under certain circumstances. For the delivery of both insulin and a counter-regulatory agent (e.g., glucagon), the delivery devices 514 may be mechanically driven infusion mechanisms having dual cartridges for insulin and the counter-regulatory agent respectively. In the present description, reference is made to glucagon specifically, but it is to be understood that this is for convenience only and that other counter-regulatory agents (e.g., dextrose) may be used. Similarly, the term "insulin" herein is to be understood as encompassing all forms of insulin-like substances including natural human or animal insulin as well as synthetic insulin in any of a variety of forms (commonly referred to as "insulin analogs").

[0055] For online or autonomous operation, a glucose sensor 516 is operatively coupled to the subject 512 to continually sample a glucose level of the subject 512. In some cases, the glucose sensor 516 may be referred to as a continuous glucose monitoring (CGM) sensor, which may continuously or periodically measure or sense blood glucose levels of the subject 512 for at least a period of time. Sensing may be accomplished in a variety of ways, generally involving some form of physical coupling 521 between the subject 512 and the glucose sensor 516. A controller 518 may control operation of the delivery device(s) 514 as a function of a glucose level signal 519 from the glucose sensor 516 and subject to programmed input parameters (PARAMS) 520 which may be provided by a user such as the subject 512, a parent or guardian of the subject 512, or a healthcare provider (e.g., a clinician or doctor). One input parameter for automatic operation may include the weight of the subject 512. In some cases, the glucose control system 510 can provide effective automated control without receiving explicit information regarding either meals that the subject 512 has ingested or any other "feedforward" information, which is achieved in part by an adaptive aspect to operation of the controller 518. In other cases, the glucose control system 510 can use received information regarding either meals that the subject ingested, or plans to ingest, or other

"feedforward" information to modify control of blood glucose and/or delivery of insulin or counter-regulatory agent.

[0056] The controller 518 is an electrical device with control circuitry that provides operating functionality as described herein. In one embodiment, the controller 518 may be realized as a computerized device (e.g., a hardware processor) having computer instruction processing circuitry that executes one or more computer programs each including respective sets of computer instructions. In some cases, the processing circuitry will generally include one or more processors 530 along with memory 540 and input/output circuitry 532 coupled to or in communication with the processor(s) 530, where the memory 540 stores computer program instructions and data, and the input/output circuitry 532 can provide interface(s) to external devices such as the glucose sensor 516 and delivery device(s) 514. In some cases, the input/output circuitry 532 may provide a user interface, or may operate with one or more processors (e.g., the controller 518 or a separate processor 530 included in the glucose control system 510 or in a separate computing system, such as a smartphone, a laptop computer, a desktop computer, a smartwatch, and the like) to provide a user interface to a user (e.g., the subject 512, a parent or guardian, or a clinician). In some cases, the input/output circuitry 532 may include a touchscreen and/or a touchscreen controller 538 configured to control a touchscreen (not shown).

[0057] In some cases, the controller 518 may perform all of the functionality of the glucose level control system 510. In such cases, the processor 530 may be optional or omitted. In other cases, the controller 518 may perform at least automated blood glucose control of the subject 512, and one or more separate processors 530 may perform one or more additional operations of the blood glucose control system 510 (or medicament pump), such as tracking occurrences of hyperglycemic or hypoglycemic events or risk events, outputting data to a user, controlling or initiating communication with another computing system, regulating access to the glucose level control system 510, or other operations unrelated to operation of a medicament pump or the delivery devices 514.

[0058] The input/output circuitry 532 may control communication with one or more other computing systems and/or with a user. In some cases, the input/output circuitry 532 may include one or more separate interface circuits or controllers to facilitate user interaction

and/or communication. For example, the input/output circuitry 532 may include user interface circuitry 534, network interface circuitry 536, and/or a touchscreen controller 538.

[0059] The user interface circuitry 534 may include any circuitry or processors that may output a user interface to a user and/or receive user input from the user via the user interface. The user interface circuitry 534 may receive one or more signals from a processor 530 corresponding to a user interface. The user interface circuitry 534 may control a display to present the user interface to a user based on the one or more signals received from the processor 530. Further, the user interface circuitry 534 may include any circuitry that can receive a signal corresponding to an interaction by a user with a user interface and can provide the signal to the processor 530 and/or controller 518 for further processing. In some cases, the user interface circuitry may be replaced by a touchscreen controller 538 that can control a touchscreen interface. In other cases, the touchscreen controller 538 may be in addition to the user interface circuitry 534.

[0060] The network interface circuitry 536 may include any circuitry that enables communication with a wired or wireless network. The network interface circuitry 536 may include one or more network interface cards and/or wireless radios (e.g., a Bluetooth radio, a Bluetooth Low Energy (BLE) radio, a 4g LTE radio, a 5G radio, a ND-LTE radio, and the like).

[0061] The memory 540 can include non-volatile memory and/or volatile memory. The non-volatile memory may include flash memory or solid state memory.

[0062] The control system 510 is also able to operate in an offline manner in which it is used to provide delivery of insulin (and potentially glucagon as well), independent of or without receipt of glucose levels reported by the sensor 516. For example, in cases where the sensor 516 needs replacing, is not properly connected to the subject 512, or is defective, the glucose control system 510 may operate in an offline manner without input from the sensor 516. Thus, overall operation may be divided between online periods each including a succession of sampling intervals when a glucose signal (level) 519 is available, and offline periods each including a succession of sampling intervals when the glucose signal (level) 519 is either completely or intermittently unavailable. The description below uses the terms "online" and "offline" for these periods. Also, offline operation may be user-selected for some reason even when a glucose level signal 519 is available for use.

[0063] User control inputs (USER CNTLs 523) may be provided via a local or remote user interface of some type. In some embodiments, the user interface may resemble that of conventional insulin pumps or similar devices, e.g., by including control buttons for commanding the delivery of a bolus and perhaps a small display. In other embodiments, the system may have a wired or wireless interface to a remote device that may incorporate a fuller-function user interface, such as a smartphone, smartwatch, laptop computer, desktop computer, cloud computing service, or other wearable device or computing device. In some cases, the wireless interface may provide access to a local area network, such as a personal home network, a company network, or otherwise. Alternatively, or in addition, the wireless interface may provide a direct connection between local devices available to a user (e.g., via Bluetooth or other near field communication technologies). In some cases, the wireless interface may provide access to a wide area network, such as, but not limited to, the Internet. For example, the wireless interface may include a cellular interface that permits access to a network via a 4G or 5G cellular connection. In some cases, the cellular interface may be a low power interface, such as narrowband LTE or other Internet of Things (IoT) interfaces.

[0064] In offline mode, the glucose sensor 516 may be absent, non-functioning, or not coupled to the subject 512. As such, in offline mode, the blood glucose signal 519 may not be available to control automatic operation. In some cases, a user may provide one or more blood glucose measurements to the control system 510 to facilitate automatic operation of the control system 510. These measurements may be provided over a particular time period. Alternatively, or in addition, the glucose control system 510 may use a therapy history and/or a history of prior blood glucose control measurements to facilitate automatic operation of the control system 510 for at least a particular time period.

[0065] The description herein refers to a "user" as the source of the user control inputs 523. The "user" as used herein may be the subject 512, a parent or guardian of the subject 512, a healthcare provider (e.g., a clinician, doctor, or other person who may provide medical care to the subject), or any other user who may be authorized to help manage therapy of the subject 512. In certain implementations, the glucose level control system 510 is a personal device worn by a subject 512 for continual glucose control. In some such implementations, the user and subject 512 may be the same person. In other implementations,

there may be another person involved in the care of the subject 512 and providing control input, and in such implementations, that other person has the role of user.

Example Controllers for a Blood Glucose Control System

[0066] Figure 6 shows an example structure of the controller 518 in accordance with certain embodiments. The controller 518 illustrated in Figure 6 may represent a physical structure with different controllers or processors, or a logical structure that is implemented by one or more physical processors. In other words, a single processor may be used to implement each of the controllers illustrated in Figure 6, each controller may be implemented by its own processor, or certain processors may implement multiple, but not necessarily all, of the controllers illustrated in Figure 6 as part of the controller 518. Moreover, although the controllers of Figure 6 are illustrated as part of the controller 518, in some implementations, one or more of the controllers may be separate from the controller 518.

[0067] The controller 518 may include four separate controllers, namely a glucagon (or counter-regulatory agent) controller 622, a basal insulin controller 624, a corrective insulin controller 626, and a priming insulin controller 628. The basal insulin controller 624 includes a nominal rate controller 630 and a modulating controller 632. As shown, the glucagon controller 622 generates a glucagon dose control signal 634 provided to a glucagon delivery device 514-1. Respective outputs 636-640 from the controllers 624-628 may be combined to form an overall insulin dose control signal 642 provided to insulin delivery device(s) 514-2. As shown, the output signal 636 from the basal insulin controller 624 may be formed by a combination of respective outputs of the nominal rate controller 630 and a modulating controller 632. The insulin delivery device(s) 514-2 may include devices tailored to deliver different types and/or quantities of insulin, and the exact configuration may be known to and/or under the control of the controllers 624-628. For ease of description, the collection of one or more insulin delivery devices 514-2 is referred below to in the singular as an insulin delivery device 514-2.

[0068] Also shown in Figure 6 are input/output signals of the various controllers, including the glucose level signal 519, parameters 520 and user inputs 523 as well as a set of inter-controller signals 644. The inter-controller signals 644 enable communication of

information from one controller, where the information is developed or generated, to another controller where the information may be used for that controller's control function.

[0069] The controllers 622-628 may be operated in either the online/automatic mode or in the offline mode. In the automated mode, the corrective controller 626 regulates glucose level using a control scheme such as described in US Patent No. 7,806,854, the contents of which are hereby incorporated by reference in its entirety herein. The basal controller 624 and priming insulin controller 628 may perform adaptive automated control as described in International Patent Application Publication WO 2012/058694 A2, the contents of which are hereby incorporated by reference in its entirety herein. The controllers 622-628 generally employ control methods or algorithms that include control parameters that are mathematically combined with reported glucose values to generate an output value that is converted (either directly or via additional conditioning) into the dose control signals 634, 642. For example, the control scheme described in US Patent No. 7,806,854 includes a generalized predictive control (GPC) method that incorporates a variety of control parameters. The control algorithms are generally adaptive, meaning that control parameters are dynamically adjusted during operation to reflect changing operating circumstances and a "learning" aspect—by monitoring its own operation, the algorithm adjusts its operation to be more specifically tailored to the individual user, enhancing the algorithm's effectiveness and reducing or avoiding a need for additional explicit input information about the user. It should be noted that the input parameters 520 may form part of the control parameters used by the control algorithm. Other control parameters are internal parameters according to the specifics of the algorithm, and selected ones of those internal control parameters are dynamically adjusted to realize the adaptation of the control algorithm.

[0070] One feature of operation is the ability of the controllers to learn from recent past periods of online operation and to use that learning during offline operation. US Patent No. 10,543,313, the contents of which are hereby incorporated by reference in its entirety herein, describes two methods that are usable independently or together in offline operation. A first method automatically calculates the correct size of a correction bolus of insulin at a time of receiving an isolated glucose measurement, the correction bolus then being administered by the system in response to a user control input. A second method automatically calculates the correct size of a meal bolus of insulin and administers it in response to a user

control input. Both methods utilize information obtained during past periods of online operation to automatically calculate correct values, freeing the user of a need to make the calculation or provide a correction factor.

Carbohydrate Therapy Equivalence Tracking

[0071] Hyperglycemia is a condition that occurs when the levels of sugar or glucose in the blood exceeds a particular level (e.g., 180 mg/dL). This condition may occur in diabetics. To help reduce the occurrence of hyperglycemia, a subject may use an automated blood glucose control system, which may automatically provide insulin to a subject using a medicament pump. The administered insulin may help control the blood glucose level of the subject by consuming glucose in the subject.

[0072] Hypoglycemia is a condition that occurs when the levels of sugar or glucose in the blood are below a particular level (e.g., 70 mg/dL). This condition may have adverse consequences including loss of consciousness, seizures, and death. The levels of blood sugar that lead to hyperglycemia and hypoglycemia may vary from patient to patient. To reduce the risk of hypoglycemia, a subject may consume carbohydrates to increase blood sugar. Because of the severe consequences associated with a hypoglycemic event, subjects usually consume carbohydrates that metabolize quickly. These carbohydrates are often unhealthy, but are preferable to the occurrence of a hypoglycemic event. For example, the carbohydrates may include candy bars with a lot of refined sugar.

[0073] A bihormonal glucose-control system may reduce the risk of occurrence of hypoglycemia by including, in addition to insulin, a counter-regulatory agent (e.g., Glucagon) that can be administered to a subject when the blood glucose level drops too low (e.g., below 50 mg/dL). For subjects who do not have a bihormonal glucose-control system, it may be useful to understand the reduction in carbohydrate therapy, or the consumption of carbohydrates to address hypoglycemic events or potential hypoglycemic events, that can be achieved by switching to a bihormonal glucose-control system. Further, it may be useful for subjects who do have a bihormonal glucose-control system to understand the reduction in carbohydrate therapy obtained by having the bihormonal glucose-control system. For example, understanding the amount of carbohydrate therapy consumed or avoided can be important in monitoring the subject's nutrition intake. While monitoring nutrition in take is important for

all people, it is particularly important for diabetics because diabetics must balance eating healthy with ensuring that their blood sugar is maintained in a particular range to avoid both hyperglycemia and hypoglycemia.

[0074] The present disclosure relates to a system that can perform a computer-implemented method of generating an indication of total carbohydrate therapy over a time period in a subject using a medicament pump configured to deliver at least insulin therapy to the subject. The system may be an automated blood glucose control system (e.g., the glucose level control system 510) that includes a hardware processor (e.g., controllers 518) for determining dose control signals to provide the medicament pump (e.g., delivery devices 514). In some cases, the medicament pump may be configured to deliver both insulin therapy and counter-regulatory agent (e.g., Glucagon) therapy. Alternatively, the system may be separate from the blood glucose control system, but may receive blood glucose information from the blood glucose control system. For example, the system may be personal computing system or a cloud computing system that can received blood glucose information from the blood glucose control system.

[0075] The system may receive or determine a glucose level of a subject (e.g., subject 512). The glucose level of the subject may be determined based on a signal (e.g., a glucose level signal) received from a continuous glucose monitoring (CGM) sensor (e.g., glucose sensor 516) that corresponds to the glucose level of the subject. In some cases, the glucose level may be determined from an isolated glucose measurement, such as may be obtained using a glucose measurement kit and/or glucose paper.

[0076] Using at least the glucose level of the subject, the system can determine whether a triggering event for raising the subject's blood glucose level has occurred. The triggering event may include a blood glucose level that indicates an occurrence of a hypoglycemic event or a risk of the occurrence of a hypoglycemic event exceeding a risk threshold within a particular period of time. A risk of a hypoglycemic event may be determined when a glucose level of the subject falls below a glucose threshold. This glucose threshold may vary for different subjects and may, in some cases, be specified by the subject or a caregiver (e.g., healthcare provider, parent, or guardian). Thus, in some cases, different triggering events may be defined based on a risk tolerance of a subject to an occurrence of hypoglycemia or to possible different preferences for an amount of blood glucose to be present in the subject.

Different subjects may prefer that blood glucose be maintained, or attempt to be maintained, at different levels due, for example, to differences in activity levels or metabolism by different subjects. Determining the risk of the occurrence of a hypoglycemic event may include receiving an indication of a risk of hypoglycemia from a glucose sensor or a prediction of a glucose level at a future time. For example, a determination of an imminent risk of hypoglycemia may comprise a determination that the subject's blood glucose level is expected to be below 60 mg/dl within the next 5-15 minutes.

[0077] Responsive to the triggering event, the system may determine an amount of counter-regulatory agent to administer, or an amount of counter-regulatory agent that would be administered if the blood glucose control system included the capability of administering a counter-regulatory agent. In some cases, the counter-regulatory agent is administered by, for example, the automated blood glucose control system. In other cases, the counter-regulatory agent is not administered. For example, the automated blood glucose control system may not be capable of delivering the counter-regulatory agent. As another example, the automated blood glucose control system may be capable of delivering the counter-regulatory agent, but may not have a dose of the counter-regulatory agent available.

[0078] The system can use the indication of the counter-regulatory agent that is administered or that would be administered to determine a corresponding amount of carbohydrates. The corresponding amount of carbohydrates may be indicative of the amount of carbohydrates that were consumed to prevent the hypoglycemic event, to reduce the risk of the hypoglycemic event, or in response to an occurrence of a hypoglycemic event. Alternatively, or in addition, the corresponding amount of carbohydrates may be indicative of the amount of carbohydrates that would have been consumed if the counter-regulatory agent were not available.

[0079] The corresponding amount of carbohydrates may be obtained from a mapping between amounts of a counter-regulatory agent and amounts of carbohydrates. In some cases, the mapping may be based on a measured equivalency between carbohydrates and a counter-regulatory agent. Alternatively, or in addition, the mapping may be between a determined amount of counter-regulatory agent and an amount of carbohydrate a subject indicates he or she normally consumes when determining that a hypoglycemic event may occur.

[0080] The mapping may be implemented by a lookup table that maps different amounts of counter-regulatory agent to different corresponding amounts of carbohydrates. In some cases, a single quantity of counter-regulatory agent may map to different amounts of carbohydrates depending on the type of carbohydrate consumed (e.g., simple vs complex carbohydrates, or the type of candy bar consumed, etc.). Alternatively, the mapping may be based on a formula that converts an amount of counter-regulatory agent to an amount of carbohydrates based on a correspondence between the amount of counter-regulatory agent and the amount of carbohydrates. The determination of a relationship between the counter-regulatory agent and carbohydrates may be based on clinical tests comparing carbohydrates to the counter-regulatory agent (e.g., Glucagon, dextrose, etc.). Further, the mapping may be based at least in part on a subject's preferred carbohydrate source and/or characteristics of the subject (e.g., weight).

[0081] In some cases, the system can track a number of hypoglycemic events or a number of occurrences of a trigger indicating an impending risk of a hypoglycemic event within a particular time period. The time period may be days, weeks, months, years, or any other period of time over which it is desirable to determine a relationship between carbohydrates consumed or avoided based on the lack of availability or availability of a counter-regulatory agent. In some cases, the tracking of carbohydrate therapy may be based on a number of hypoglycemia events or hypoglycemia risk events instead of or in addition to a time period.

[0082] For each occurrence of a hypoglycemic event or occurrence of a trigger indicating an impending risk of a hypoglycemic event, the system can determine an estimate of the carbohydrate therapy saved or that would have been saved by having access to the counter-therapy agent. The system can generate a report for the time period that indicates the total carbohydrate saved or that would have been saved with access to counter-regulatory agent. The report may include an aggregate or sum of the carbohydrate therapy required or saved during the time period. This time period may be days, weeks, months, years, or since a particular time (e.g., since the subject starting using the system). Further, the report may indicate the type of carbohydrates typically consumed by the subject when responding to a hypoglycemic event or a risk of an impending hypoglycemic event. This report can be presented to the subject, a healthcare provider, and/or a parent or guardian of the subject. The

healthcare provider can use this report to help care for the subject. For example, the healthcare provider can use the report to generate a nutrition plan for the subject that accounts for the carbohydrates consumed to maintain the blood glucose level within a desired or setpoint range.

[0083] The report may include a range of carbohydrate therapy avoided or likely consumed to address the risk of hypoglycemia events. Further, the report may include an amount of calories saved or not consumed, an amount of sugar avoided, an amount of food not consumed, a likely weight gain avoided, etc. based on the consumption of a counter-regulatory agent in place of carbohydrate therapy.

Carbohydrate Therapy Equivalence Tracking Process

[0084] Figure 7 presents a flowchart of an example carbohydrate therapy equivalence tracking process 700 in accordance with certain embodiments. The process 700 may be performed by any system that can track the glucose level of a subject over time and identify hypoglycemic events, or occurrences when a risk of a hypoglycemic event satisfies a threshold (e.g., when the risk of the hypoglycemic event matches or is above a particular probability). For example, the process 700 may be performed by one or more elements of the glucose level control system 510. In some cases, at least certain operations of the process 700 may be performed by a separate computing system that receives indications of blood glucose levels of the subject 512 from the glucose level control system 510 and/or indications of hypoglycemic events (or identified above threshold hypoglycemic risk events). Although one or more different systems may perform one or more operations of the process 700, to simplify discussions and not to limit the present disclosure, the process 700 is described with respect to particular systems.

[0085] The process 700 begins at block 702 where the glucose level control system 510 receives a glucose level of a subject 512. Receiving the glucose level may include receiving a glucose level signal corresponding to a glucose level of the subject. The glucose level signal may be received from the glucose sensor 516 (e.g., a CGM sensor). Alternatively, or in addition, the glucose level may be received from a user that provides the glucose level to the glucose level control system 510 via a user interface, such as a user interface generated by the processor 530 that may be output on a touchscreen by the touchscreen controller 538. The glucose level received from the user may be a glucose level measured using an alternative

sensor or measurement mechanism (e.g., diabetes measurement strips) that may be used in place of the glucose sensor 516.

[0086] At bock 704, the glucose level control system 510 determines based at least in part on the glucose level that a triggering event for raising the blood glucose level of the subject 512 has occurred. The triggering event may include a determination that a hypoglycemic event or an episode of hypoglycemia is present or is occurring in the subject 512. Alternatively, or in addition, the triggering event may include a determination that there is an impending risk of hypoglycemia in the subject 512, or an impending risk that a hypoglycemic event will occur within a particular amount of time in the subject 512. The determination of the hypoglycemic event or the risk of a hypoglycemic event occurring may be determined by comparing the glucose level of the subject to a glucose threshold. Alternatively, or in addition, the determination of the hypoglycemic event or the risk of a hypoglycemic event occurring may be determined by comparing a trend and/or rate of change (e.g., rate of decrease) in the glucose level to a threshold. In some cases, the particular blood glucose level and the trend in the blood glucose level may be combined to determine a risk of hypoglycemia. For example, if the glucose level is low (e.g., below a particular threshold, such as 60 mg/dL), but a determined trend in the glucose level is upwards, then a risk of hypoglycemia may be lower than if the glucose level is above the threshold, but the determined trend in the glucose level is downwards towards a threshold. In some cases, the threshold(s) used to determine whether a hypoglycemic event is occurring or to determine that there is an above threshold risk of hypoglycemia occurring may vary based on physiological characteristics of the subject 512. The physiological characteristics may be based on physiological characteristics associated or shared among groups of patients (e.g., gender, age, weight) or may be specific to the particular subject 512. For example, thresholds associated with a risk of hypoglycemia may be determined based on determined glucose levels of the subject 512 during prior occurrences of hypoglycemia as determined by the glucose level control system 510 or based on clinical data specific to the subject 512.

[0087] In response to the triggering event at the block 704, the glucose level control system 510 determines an amount of counter-regulatory agent at block 706. The glucose level control system 510 may determine the amount of counter-regulatory agent based at least in part on the blood glucose level of the subject 512, the amount or percentage of risk of

hypoglycemia occurring (e.g., a 99% risk or probability of hypoglycemia may trigger a larger counter-regulatory agent dose than a 75% risk or probability of hypoglycemia), physiological characteristics of the subject 512, a trend in the blood glucose level of the subject 512, or a type of counter-regulatory agent.

[0088] In some cases, the glucose level control system 510 may use a delivery device 514-1 to deliver the determined amount of counter-regulatory agent to the subject 512. The counter-regulatory agent may be delivered to the subject 512 in response to the impending risk of hypoglycemia or the episode of hypoglycemia, and/or in response to the glucose level satisfying or falling below a threshold glucose level. The threshold glucose level or the determination of whether to deliver the counter-regulatory agent may be based on physiological characteristics of the subject 512 and/or the risk tolerance of the subject 512 to a hypoglycemic event. It should be understood that, in the present context, risk tolerance generally does not refer to a user's subjective propensity for risk. Instead, the risk tolerance is typically an objective determination of how likely the subject 512 is to have a hypoglycemic event, or for symptoms of hypoglycemia to occur, when the blood glucose level of the subject 512 is at a particular level. This risk tolerance may be determined based on a history of hypoglycemia, or lack thereof, in the subject 512 at particular blood glucose levels and/or based on clinical data obtained for the subject 512.

[0089] In other cases, the glucose level control system 510 may not deliver counter-regulatory agent to the subject 512 because, for example, the glucose control system 510 may not be capable of delivering counter-regulatory agent or because the cartridge holding the counter-regulatory agent may be empty or have less than a threshold amount of counter-regulatory agent remaining.

[0090] At block 708, the glucose level control system 510 determines a dose of carbohydrate therapy based at least in part on the counter-regulatory agent. The carbohydrate therapy may refer to carbohydrates consumed to prevent or respond to an occurrence of hypoglycemia. The carbohydrates may include any type of carbohydrate that the subject 512 may consume to prevent or respond to an occurrence of hypoglycemia, and typically includes fast-acting carbohydrates, which may include sugary foods that are easily converted into sugars in the human body. For example, the carbohydrate may be a candy bar, soda, fruit juice, or other foods that may have a lot of sugar or refined sugars.

[0091] Determining the dose of carbohydrate therapy may include accessing a mapping between the counter-regulatory agent and carbohydrates. This mapping may be stored in, and accessed from, the memory 540 and/or may be accessed from another computing device. The glucose level control system 510 may determine the dose of carbohydrate therapy based at least in part on the mapping and the amount of the counter-regulatory agent. In some cases, the mapping may vary based on the type of counter-regulatory agent and/or the type of carbohydrates. The type of counter-regulatory agent may be identified by a user or may automatically be determined based on a medicament cartridge installed or inserted into the glucose level control system 510. Further, the type of carbohydrates may be specified by a user and may include an identity of the type of carbohydrates usually consumed by the subject 512 when responding to an occurrence or a risk of an occurrence of hypoglycemia. For example, the user may specify, via a user interface, whether the subject usually consumes a candy bar or fruit juice, or the size of the carbohydrate usually consumed when responding to an occurrence or a risk of an occurrence of hypoglycemia.

[0092] In some cases, the mapping between the counter-regulatory agent and carbohydrates may be generated based on a clinical comparison of the counter-regulatory agent to the carbohydrates. Alternatively, or in addition, the mapping may be based at least in part on a physiological characteristic of the subject 512.

[0093] The mapping may be stored in a lookup table or other data structure that can store relationships between different carbohydrates and counter-regulatory agents. The mapping may be between different quantities and/or types of carbohydrates and different quantities and/or types of counter-regulatory agent. Alternatively, or in addition, the mapping may be a formula that relates the carbohydrates to the counter-regulatory agent or vice versa. For example, the glucose level control system 510 may use the determined amount of counter-regulatory agent as an index to a lookup table to determine a corresponding quantity of carbohydrates. Alternatively, the glucose control system 510 may apply the determined amount of counter-regulatory agent to a formula to calculate a corresponding quantity of carbohydrates. This formula may be generated based on the type of counter-regulatory agent and/or carbohydrates, physiological characteristics of the user, and/or clinical data.

[0094] In some cases, the mapping may vary based on the glucose level control system 510. For example, the glucose level control system 510 may include a first mapping

when the glucose level control system 510 (or medicament pump thereof) is a bi-hormonal pump configured to deliver insulin and counter-regulatory agent therapy to the subject, and may include a second mapping when the glucose level control system 510 is not configured to deliver the counter-regulatory agent therapy to the subject 512. In some cases, the glucose level control system 510 may store both mappings in the memory 540. For example, the glucose level control system 510 may use the first mapping when counter-regulatory agent is available and may use the second mapping when counter-regulatory agent is not available. The mappings may vary for a number of reasons including because a bi-hormonal glucose level control system 510 may more precisely control the occurrence of hypoglycemic events due to the availability of counter-regulatory agent, which may therefore alter the frequency and type of carbohydrates that a subject may consume.

[0095] At block 710, the glucose level control system 510 outputs an indication of the dose of carbohydrate therapy. Outputting the indication of the dose of carbohydrate therapy may include outputting an indication of the dose of carbohydrate therapy on a display for presentation to a user. Further, the indication of the dose of carbohydrate therapy may be transmitted to another computing system for display or aggregation with other therapy data associated with the subject 512, such as therapy data used by a clinician to help manager the subject's 512 care. In some cases, the indication of the dose of carbohydrate therapy may be included in a report corresponding to care of the subject 512.

[0096] In certain embodiments, the operations of the process 700 are performed or repeated over a period of time. For example, the operations associated with the block 702-708 may be repeated one or more times over the period of time. In such cases, the determined doses of carbohydrate therapy may be aggregated for the period of time to determine a total carbohydrate therapy for the period of time. Further, the block 710 may include outputting an indication of the dose of carbohydrate therapy for each individual time that a dose of carbohydrate therapy is determined and/or the aggregated determined doses of carbohydrate therapy for the period of time. The period of time may be any time period. For example, the period of time may be a day, week, month, year, since the subject 512 began using the glucose level control system 510, since a user obtained or ceased obtaining access to a counter-regulatory agent, or any other period of time. In some cases, the period of time is defined by the occurrences of hypoglycemic events or occurrences of the risk of hypoglycemia satisfying

a threshold. For example, the period of time may be the time associated with 5, 10, 15, 100, or any other number of hypoglycemic events or occurrences of the risk of hypoglycemia satisfying a threshold.

[0097] The indication of total carbohydrate therapy may correspond to a reduction in carbohydrates consumed by the subject 512 because, for example, of the availability of counter-regulatory agent to the glucose level control system 510, and consequently, the subject 514. Thus, the indication of total carbohydrate therapy may correspond to a reduction in carbohydrates achievable by an availability to the subject 512 of the counter-regulatory agent. Further, the indication of total carbohydrate therapy may correspond to an amount of counter-regulatory agent provided or that can be provided to the subject as a substitute for carbohydrates.

[0098] The particular carbohydrates consumed or the amount of carbohydrates consumed by each subject or during each hypoglycemic event may vary. For example, a subject 512 may consume a particular candy bar when the subject's 512 measured blood sugar level is too low or when the subject feels that the blood sugar level is likely low (e.g., begins to feel some hypoglycemic effects). The subject may consume the whole candy bar, or may consume a portion. Some of the candy bar may be lost to the subject (e.g., fall on the ground). In other cases, the subject may have different candy bars available, or other refined sugar sources, during different hypoglycemic events. Thus, even though there may be an objective mapping between carbohydrates and counter-regulatory agent, the amount of carbohydrates consumed or avoided due to the availability of counter-regulatory agent may vary for each hypoglycemic event. Accordingly, the indication of total carbohydrate therapy avoided, or that could be avoided if counter-regulatory agent were available, may indicate a range of carbohydrates that may potentially be replaced by the availability of counter-regulatory agent.

[0099] In some cases, the indication of carbohydrate therapy or total carbohydrate therapy may include one or more of an indication of calories, an indication of carbohydrates, an indication of a measure of sugar, an indication of a quantity of food, or an indication of weight of the subject attributable to the carbohydrate therapy. The indications may be associated with what is consumed due to a lack of counter-regulatory agent, or what is avoided based on the availability of counter-regulatory agent. For example, the indication of calories may be the amount of calories not consumed because of the presence of the counter-regulatory

agent. Advantageously, the availability of therapy information relating to the carbohydrate therapy or avoided carbohydrate therapy can assist in patient care. For example, a subject can reduce refined sugar consumption that can have a number of health consequences. Further, a healthcare provider can better help a subject control his or her weight based on the carbohydrate information.

[0100] The indication of carbohydrate therapy may be presented to a user in any presentable form. For example, the indication of carbohydrate therapy may be presented as a table, a chart, a graph, a histogram, or other data presentation tool for indicating the reduction in carbohydrates over time that is achieved by the presence of counter-regulatory agent or that could be achieved by the use of counter-regulatory agent for the particular subject 512. It should be understood that the indication of carbohydrate therapy data may vary for different users due to differences in physiological characteristics of the users, differences in the diabetes of each user, differences in lifestyle of each user, among other factors. Advantageously, by using the glucose level control system 510 to track the carbohydrate therapy of the subject 512 or to determine the carbohydrate therapy avoided or avoidable associated with counter-regulatory agent, management of the subject's 512 blood glucose level can be personalized.

Additional Carbohydrate Therapy Equivalence Tracking Embodiments

[0101] People with diabetes often consume oral carbohydrates for the purpose of treating or preventing hypoglycemia. Such extra carbohydrates can have unhealthy consequences, contributing to weight gain being one of them. Having a bihormonal glucose-control system that infuses a counter-regulatory agent (e.g., Glucagon) to reduce the frequency, extent, and duration of hypoglycemia can significantly reduce the amount of oral carbohydrates that are needed "medicinally" to treat or prevent hypoglycemia

[0102] Certain embodiments of the present disclosure relate to a method for translating an amount of online counter-regulatory dosing (e.g. glucagon) computed by an autonomous glucose-control system to an amount of carbohydrates that the user is estimated to have been spared from needing by virtue of the counter-regulatory dosing, or that the user would be spaced from needing if the user had access to the counter-regulatory agent. In a bihormonal autonomous glucose-control system that infuses both insulin and a counter-regulatory agent/hormone, the method may include a mapping between the online counter-

regulatory dosing, which was delivered to treat or prevent low glucose levels, and oral carbohydrates that are estimated to have otherwise been required to achieve a comparable safe control situation (had the counter-regulatory dosing not been delivered). In an insulin-only autonomous glucose-control system, where doses of a counter-regulatory agent/hormone are not delivered, but are still computed online, the method may include a mapping between the computed online counter-regulatory dosing and an estimated amount of oral carbohydrates that the subject will likely have been spared from needing to consume to treat or prevent low glucose levels had the counter-regulatory agent been available and its doses actually delivered.

[0103] Without loss of generality, embodiments disclosed herein include an autonomous glucose-control system where the counter-regulatory agent is specifically glucagon. However, other medicaments and/or counter-regulatory agents may be utilized. The method may include relating computed online glucagon dosing with consumed oral carbohydrates for the treatment or prevention of low glucose levels ("treatment carbs") as observed in real use (e.g., during clinical studies) in the insulin-only configuration, and relating the relationship between the counter-regulatory agent and carbohydrates to a similar relationship between delivered online glucagon doses (or other counter-regulatory agent) and similarly consumed oral carbohydrates in the bihormonal (insulin–glucagon) configuration.

[0104] Using data gathered from real use (e.g., clinical studies), a relationship between the consumed treatment carbs in an insulin-only configuration, C_{io}, and the online computed (but not delivered) glucagon dosing, G_c, can be described by the relationship $C_{io} = R_{io}(x) * G_c$, where $R_{io}(x)$ may be a relating factor that can be a function of several dependencies that are included in vector x. Such dependencies can include the specific insulin and/or glucagon being used (e.g., their clinical properties), and/or the pharmacokinetic settings assumed by the control system in relation to insulin and/or glucagon. The dependencies can also include the user's body mass and the glucose target used by the glucose-control system. In some embodiments, Rio(x) may be a constant, or $Rio(x) \equiv Rio$, for a system exhibiting limited variation in the relationship between C_{io} and G_c (e.g., due to limited effect, or limited or no variation in the associated dependencies).

[0105] Similar to the insulin-only configuration, from real-use data, a relationship between the consumed treatment carbs in a bihormonal (insulin–glucagon) configuration, C_{bh}, and the online delivered glucagon dosing, G_d, can be described by the relationship $C_{bh} = R_{bh}(x)$

* G_d, where $R_{bh}(x)$ may be described in a similar fashion to $R_{io}(x)$ above. In some cases, the quantities C_{io}, G_c, C_{bh}, and G_d can refer to daily amounts, as averaged over some period of use (e.g., a week). In some cases, the quantities C_{io}, G_c, C_{bh}, and G_d can refer to average daily amounts per body mass of the user, in which case dependency on body mass can be eliminated from x.

[0106] In cases where G_c is computed, but no glucagon is actually delivered in an insulin-only system, G_c has no effect on glucose insofar as treating or preventing low glucose levels, which in turn is generally expected to invoke further computed glucagon dosing (e.g., goes towards increasing the magnitude of G_d for a given situation). By contrast, since G_d is delivered in a bihormonal system, it is expected to have an effect in preventing or reducing the frequency, extent, or duration of low glucose levels, which in turn is expected to limit the overall magnitude of glucagon dosing (e.g., limits G_d for a given situation). As such, for a given set of dependencies, it is generally expected that $G_c > G_d$ between the two system configurations. Likewise, since G_c has no effect in combating low glucose levels while G_d does have such an effect, it is expected that treatment carbohydrates $C_{io} > C_{bh}$, when comparing the two system configurations.

[0107] If one can ideally relate, for a given real-use case of an insulin-only system with Gc, what the corresponding C_{io} would have been for the same real-use scenario, had the computed online glucagon dosing actually been delivered as G_d, one can project an estimate that the user would have required "$C_{io} - C_{bh}$" less treatment carbs (e.g., would have saved that much), had they instead been using a bihormonal system (with the same insulin controller), where glucagon would have been delivered. Conversely, if one can ideally relate, for a given real-use case of a bihormonal system with G_d, what the corresponding C_{bh} would have been for the same real-use scenario, had the delivered online glucagon dosing not been delivered but only computed as G_c, one can project an estimate that the user had actually avoided the need to take "$C_{io} - C_{bh}$" additional treatment carbs, had they been instead using an insulin-only system (with the same insulin controller), where glucagon would not have been delivered. It should be understood that the above calculations are an estimate in an ideal situation as, in practice, it is not possible to have a re-run of a past real-use scenario to obtain such ideal relationships.

[0108] For practical implementation, real-use cases where the insulin-only system was used can be re-simulated while assuming a bihormonal system is available, where glucagon is assumed to be delivered. Since the control system may take delivered doses into account when issuing subsequent nearby glucagon doses, the simulated glucagon dosing may exhibit a reduction relative to the original G_c of the insulin-only system. However, with the glucose profile kept unaltered in a simulation, the simulation may lack reflecting any resulting glucose excursions in response to the assumed delivered glucagon dosing. The simulation in turn may lack reflecting the full reduction in glucagon dosing down to G_d that may have been observed if the glucose excursions had in fact benefited from glucagon being delivered. Thus, the reduced glucagon dosing that is observed in the simulation, pseudo delivered glucagon $\hat{G}_d$, may arguably be exaggerated in magnitude relative to what would have been the "real G_d". As described above, based on prior analyses G_c can be mapped to a corresponding amount C_{io} in the insulin-only configuration, and $\hat{G}_d$ can be mapped to a corresponding amount $\hat{C}_{bh}$ in the bihormonal configuration. The simulation results, therefore, can map the reduction "$G_c - \hat{G}_d$" to an estimate "$C_{io} - \hat{C}_{bh}$" of treatment carbs that the user would spare had they been using the bihormonal system. The estimates may be conservative estimates. Repeating the simulation analyses across a variety of real-use cases that span the range of G_c observed in practice provides a global mapping between them and the associated range of (in some cases, conservative) estimates "$C_{io} - \hat{C}_{bh}$" of treatment carbs that the user would likely not need to consume had they been using the bihormonal system. Conversely, the mapping can be utilized when a bihormonal system is being used, where the observed dosing G_d is mapped back to a pseudo computed glucagon $\hat{G}_c$ and the resulting associated difference "$\hat{C}_{io} - C_{bh}$" provides a (in some cases, conservative) estimate of the treatment carbs that the user had likely saved by virtue of being on the bihormonal system.

[0109] Certain embodiments includes a system that comprises a controller for automatic control of a blood glucose level of a subject. The controller may be operative to generate an insulin dose control signal based on time-varying glucose levels of the subject as represented by a glucose level signal over time. The glucose level signal can be generated by a glucose sensor operative to continually sense a glucose level of the subject. The insulin dose control signal may control the delivery of doses of insulin by a delivery device. Further, the controller can operate at a regular frequency to generate an insulin dose control signal to

regulate the glucose levels in the subject. During online operation, the controller can employ a control algorithm that generates a glucagon dosing signal, which may be mapped to an associated amount of oral carbohydrates.

[0110] The oral carbohydrates may be associated with the prevention or treatment of low glucose levels. Further, the mapping between the glucagon dosing signal and the oral carbohydrates may be derived from analysis of clinical data. The glucagon dosing signal may be computed, but not delivered in an insulin-only system configuration. In contrast, the glucagon dosing signal can be computed and glucagon can be delivered in an insulin–glucagon system configuration. The computed glucagon dosing in an insulin-only system configuration can be mapped to an amount of oral carbohydrates that is estimated to have been saved had glucagon dosing been delivered if an insulin–glucagon system configuration had instead been used. The delivered glucagon dosing in an insulin–glucagon system configuration can be mapped to an amount of oral carbohydrates that is estimated to have been saved if an insulin–only system configuration had instead been used. The mapping may be dependent on the clinical properties of the insulin and glucagon being used, and settings in the control system related to the action and effect of insulin and glucagon. Further, the mapping may be dependent on the subject's body mass.

Backup Therapy Protocol Generation

[0111] An ambulatory medicament device, such as a blood glucose control system (e.g., an insulin pump or a combined insulin and counter-regulatory agent (e.g., Glucagon) pump), can provide personalized therapy to a subject. In other words, the ambulatory medicament device may provide medicament that is specific to a subject's physiology, condition, activity, and the like. Further, some ambulatory medicament device's monitor a condition of the subject to determine when to provide therapy, what type of therapy to provide (e.g., insulin or counter-regulatory agent therapy), and/or how much therapy to provide. The therapy provided by the ambulatory medicament device may be ongoing and, in some cases, life-saving. Thus, it is important that ambulatory medicament device function uninterrupted.

[0112] However, despite best efforts, sometimes therapy by the ambulatory medicament device is interrupted. For example, the ambulatory medicament device may break, a subject may run out of or not have access to a necessary disposable (e.g., a replacement

insulin cartridge, a site kit for changing the site of the ambulatory medicament device, a replacement battery, and the like), or the subject may forget to charge a battery of the ambulatory medicament device or not be in a location where a power source is available to charge the ambulatory medicament device. Thus, there are occasions when the ambulatory medicament device may not be available or may need replacing.

[0113] When the ambulatory medicament device is not available, or when a replacement (temporary or permanent) ambulatory medicament device is being used, it may be desirable to have an indication of the therapy settings from the ambulatory medicament device. For example, if a user (e.g., a subject, healthcare provider, parent, or guardian) is providing alternative therapy (e.g., injection therapy) while the ambulatory medicament device, it may be necessary to know the quantity of therapy to provide under particular circumstances or at particular times.

[0114] In some cases, a healthcare provider may have access to therapy information that may have been previously determined, for example, via clinical testing. This therapy information may include any type of information that can be used to determine therapy to provide to a subject at a particular time or under particular conditions. For example, the therapy information may indicate a setpoint insulin range for the subject, a quantity of insulin to provide to the user to adjust glucose levels, an amount of time for insulin to reach max concentration in the subject, or any other information that might impact the timing or amount of dosing of a medicament.

[0115] However, the therapy information available to the healthcare provider may be insufficient. For example, the subject may not be able to reach the healthcare provider to obtain the therapy information at a point in time when the information is needed. Further, in some cases the information may be outdated because, for example, the ambulatory medicament device may have refined the therapy over time. If the refinements have occurred recently, it is possible that the outdated values of the healthcare provider may be sufficient until a replacement ambulatory medicament device can repeat the refinement process of the original ambulatory medicament device. However, in other cases, the outdated therapy information may be insufficient because, for example, the refinements were significant or the subject may have had physiological changes (e.g., weight gain or weight loss, or metabolism changes) since

the last time a clinical test was performed. Using outdated therapy information may be less effective, and may cause discomfort or harm to a subject.

[0116] Certain embodiments of a system disclosed herein can generate backup therapy data. Using the backup therapy data, a subject (or user) can perform injection therapy or configure a replacement ambulatory medicament device if the subject's current device malfunctions. By using the backup therapy data, the subject can maintain a level of therapy care that matches or more closely matches what was being provided by the ambulatory medicament device than clinical data, which may be outdated if available at all.

[0117] The system can include an automated blood glucose control system (e.g., the glucose level control system 510) configured to generate a backup therapy protocol comprising insulin therapy instructions derived from autonomously determined doses of insulin. During normal operation, the system may receive glucose level signals from a sensor operatively configured to determine glucose levels in a subject. The sensor can include any type of sensor that can determine glucose levels. For example, the sensor may be a Continuous Glucose Monitoring (CGM) sensor.

[0118] Using the determined glucose levels, the system may autonomously determine and/or generate a dose control signal using a control algorithm. The determination and/or generation of the dose control system may be performed without any user action or interaction with the blood glucose control signal. In some cases, the lack of user action or interaction with the blood glucose control system refers to conscious action and may exclude sensor measurements of physiological characteristics of the subject. The control algorithm may autonomously determine doses of insulin to be infused into the subject for the purpose of controlling blood glucose of the subject based at least in part on the glucose level signal. The control algorithm may include any type of control algorithm.

[0119] For example, the control algorithm may be a biexponential pharmacokinetic (PK) model that models the accumulation of insulin doses in the blood plasma of the subject. The automated blood glucose system, may control delivery or administering of insulin or a counter-regulatory agent based on the bi-exponential PK model and one or more blood glucose measurements of the subject. The bi-exponential PK model may model the absorption of subcutaneously administered insulin into blood and/or a rate of diminishing glucose in the blood. The bi-exponential PK model over time may be represented by the following equation:

$$p(t) = KU_0(e^{-\alpha_1 t} - e^{-\alpha_2 t}) \quad 1$$

where U_0 is the subcutaneous dose in units (U), K is a scaling constant, and α_1 and α_2 are time constants.

[0120] As an alternative example, the control algorithm may include a linear algorithm that models diminishing glucose or the accumulation of glucose in the subject based on a linear reduction rate. For example, the control algorithm may determine that a particular dose, D, of insulin is to be administered to the subject. The control algorithm may then estimate that 0.25*D of the insulin is absorbed into the blood plasma per hour over 4 hours. Similarly, the control algorithm may estimate that the insulin diminishes at a rate of 0.33*D per hour over three hours upon the insulin reaching maximum concentration within the blood plasma.

[0121] Regardless of the control algorithm used, the automated blood glucose control system may administer insulin and, in some cases, a counter-regulatory agent one or more times over a particular time period. There may be multiple reasons and/or triggers that cause the automated blood glucose control system to supply insulin. For example, the automated blood glucose control system may provide a basal does of insulin on a periodic basis in an attempt to maintain a steady blood glucose level in the blood plasma of the subject. As another example, the automated blood glucose control system may supply mealtime boluses of insulin to account for an expected amount of glucose to be consumed as part of a meal. The mealtime bolus may be an amount specified by a user or may be an amount of insulin administered in response to an indication of meal size by the subject. This indication of meal size may be subjective. In some cases, the size of the bolus of insulin for an identified meal size may be a fixed or constant value. In some other cases, the size of the bolus of insulin for an identified meal size may vary over time as the automated blood glucose control system learns or refines the amount of insulin to administer to a subject to keep the subject's blood glucose within a target setpoint. The automated blood glucose control system may learn or refine the optimal insulin to administer based on a comparison of expected blood glucose level measurements to actual blood glucose level measurements when the subject (or other user) makes a subjective identification of meal size. In addition to basal and mealtime boluses of insulin, the automated blood glucose control system may also supply correction doses of insulin to the subject based on the glucose level signal. The correction doses of insulin may be supplied in response to a model predictive controller (MPC) determining or estimating that a

user's level of insulin is expected to fall below a threshold in some future period of time based on blood glucose level readings. The MPC may execute a control algorithm that can regulate glucose concentration to a reference set point while simultaneously minimizing both the control signal aggressiveness and local insulin accumulation. A mathematical formulation describing the subcutaneous accumulation of administered insulin may be derived based on nominal temporal values pertaining to the pharmacokinetics of insulin in the subject. The mathematical formulation may be in terms of the insulin absorption rate, peak insulin absorption time, and/or overall time of action for the insulin (or other medicament). Examples of an MPC controller that may be used with embodiments of the present disclosure are described in U.S. Patent No. 7,806,854, issued on October 5, 2010, the disclosure of which is hereby incorporated by reference in its entirety herein for all purposes.

[0122] The automated blood glucose control system may track insulin therapy administered to the subject over a tracking period. Although the tracking period is not limited in length and may generally be any period of time, typically the tracking period is at least a minimum period of time sufficient for the automated blood glucose control system to learn or refine the amount of medicament (e.g., insulin) to administer to the subject under particular conditions (e.g., when particular blood glucose levels are detected or when particular meal sizes are identified). For example, the automated blood glucose control system may initially administer 6 units of insulin for lunch and 10 units of insulin for dinner. These initial values may be set be a healthcare provider and/or a subject based, for example, on clinical data for the subject. However, over time (e.g., 3-5 days), the automated blood glucose control system may determine that providing 7 units of insulin for lunch and 8 units of insulin for dinner maintains the subject's blood glucose level closer to the median of the setpoint range than did the initial configuration. Although not limited as such, generally each unit of insulin is $1/100^{th}$ of a milliliter of insulin.

[0123] As indicated, the tracking period can be any length of time. For example, the tracking period could be 1 day, 3 days, 5 days, 7 days, anything in between, or more. Typically the tracking period is at least long enough to provide sufficient time to learn or refine initial settings of the automated blood glucose control system for the subject. In some cases, the tracking period may be 1 or 2 days. In other cases, the tracking period may be from a particular time period until a current time period. For example, the tracking period may be

from the start of therapy until a current point in time. In other cases, the tracking period may be a moving or shifting window. For example, the tracking period may be the least week, two weeks, month, or year. Further, for non-blood glucose systems, the tracking period may differ based on the amount of time sufficient to determine or refine medicament control values for the subject. In some cases, the tracking period may a window of a particular length. This window may be a moving window. For example, the window may be the previous 7 days. As time passes, the window moves to continue to encompass the previous 7 days.

[0124] Tracking the insulin therapy may include storing the autonomously determined doses of insulin delivered to the subject. These autonomously determined doses of insulin may include one or more of basal insulin doses, mealtime insulin boluses, or correction insulin doses. Moreover, tracking the insulin therapy may including tracking the type of insulin used. The type of insulin may include any type of insulin, such as fast-acting insulin (e.g., Lispro, Aspro, or Glulisin), regular or short-acting insulin (e.g., Humulin R, Novolin R, or Velosulin R), intermedia-acting insulin (e.g., Humulin N, Novolin N, ReliOn), long-acting insulin (e.g., detemir (Levemir), and glargine (Basaglar, Lantus)), or Ultra long-acting insulin (e.g., degludec (Tresiba), glargine u-300 (Toujeo)). Further, tracking the insulin therapy may include tracking counter-regulatory agent (e.g., Glucagon) therapy.

[0125] In some cases, tracking the insulin therapy may include calculating average therapy provided over a period of time (e.g., over the tracking window). For example, the tracking the insulin therapy may include determining a moving average of the past 7 days of nominal basal doses during each dosing interval. Assuming basal therapy is provided every five minutes, the moving average may be calculated based on the previous 288 doses (e.g., over 1 day) or 2016 doses (e.g., over 7 days). This calculation can be used to obtain a basal rate profile for backup therapy. In some cases, the time period may be broken up into different time segments that may be associated with different rates of therapy. For example, there may be 4 basal therapy periods (e.g., 10pm-4am, 4am-10am, 10am-4pm, and 4pm-10pm). Thus, a separate moving average may be calculated for each of the basal therapy periods over a day, or over some other time period (e.g., 7 days). The calculated averages may be used to calculate a backup basal rate that can be used to program an automated glucose control system. Further, the basal rate profile may include aggregating the doses across the day to determine a dose of long-acting insulin that can be used for injection therapy.

[0126] Similar to the basal therapy, a moving average of correction doses can be calculated to determine a correction bolus of insulin to supply via a pump or injection therapy. Alternatively, or in addition, the moving average of correction doses in combination with measurements of blood glucose of the subject over time may be used to determine a rate of change of blood glucose from a unit of insulin provided during correction therapy.

[0127] Mealtime boluses may also be calculated using a moving average. Further, a separate moving average may be calculated for each meal (e.g., breakfast, lunch, and dinner) dose over some period of time (e.g., 7 previous days of mealtimes). In some cases, each of the moving averages may be calculated using different windowing functions. For example, the moving average may be calculated using a Hann window or a Hamming window. In some cases, different levels of dosing may be determined for different meal sizes and different doses may be determined for different meals. In some cases, different meals (e.g., breakfast vs lunch) may have different dosing despite similarity in size due, for example, to differences in the subject's blood glucose levels when they wake up versus when they usually have lunch, or because differences in types of foods consumed at breakfast versus lunch. Further, in some cases, differences in metabolisms of different subjects may result in different mealtime boluses.

[0128] The insulin therapy may be stored in a therapy log, or any other type of data structure. Further, the insulin therapy may be stored in a memory of the automated blood glucose system, on a companion device, on a computing device of the subject or user (e.g., a laptop or desktop), in a cloud computing environment, or in any other storage system capable of receiving the insulin therapy information from the automated blood glucose control system.

[0129] Using the therapy log or tracked insulin data, the automated blood glucose system, or a computing system with access to the therapy log or tracked insulin data, may generate a backup insulin therapy protocol. The backup insulin therapy protocol may include a backup injection therapy protocol or a backup pump therapy protocol. The backup injection therapy protocol may include one or more amounts of insulin (or other medicament) to administer using injection therapy (e.g., manually provided shots) at one or more times to help maintain the subject's condition within a normal or desired physiological range or condition. The backup pump therapy protocol may include data and/or instructions for a replacement

medicament pump of the same type or of a different type to supply therapy to the subject. The replacement medicament pump may be a permanent replacement or a temporary replacement.

[0130] The backup pump therapy protocol may be the same as and/or include the same type of information as the backup injection therapy protocol. Alternatively, or in addition, the backup pump therapy protocol may include different values than the backup injection therapy protocol. For example, the backup pump therapy protocol may include an indication of basal therapy to provide periodically on relatively short increments (e.g., every 5 minutes, every half hour, every hour, etc.). Because an insulin pump may automatically administer insulin, it is possible to provide a steady or periodic drip of insulin. However, it is impractical for a subject using injection therapy to administer insulin manually on similar short increments. Instead, a user might administer therapy on a less regular basis (e.g., once every roughly 4-5 hours or 6-8 hours, etc.). Accordingly, the backup therapy protocol for a pump and for injection may differ. Further, the type on insulin used or identified in the backup protocol may differ.

[0131] In some cases, the backup pump therapy protocol may be used to manually refine pump settings for a replacement blood glucose control system to be used by the subject. In other cases, the replacement blood glucose control system may automatically configure itself based on the backup therapy protocol. For example, a user may cause the backup therapy protocol to be provided to the replacement blood glucose control system, which may use the information to self-calibrate.

[0132] Regardless of whether a backup protocol is generated or needed, collecting and analyzing therapy data for therapy provided by the automated blood glucose control system can be useful for helping to manage a subject's condition. For example, therapy data may be useful in determining whether the subject is satisfied with therapy provided by the automated blood glucose control system or whether the blood glucose control system is configured in a way that best matches the subject's lifestyle or therapy preferences (subjective or otherwise). One way to determine whether the blood glucose control system is providing desired therapy, or therapy at a desired rate, is to determine the frequency and/or magnitude of modifications made by the subject, or other user that may help manage a subject's therapy, to therapy provided by the automated blood glucose control system.

[0133] The automated blood glucose control system disclosed herein can track user modifications to a control parameter over a tracking period. The tracking period may include

any time period described above for tracking therapy to generate a backup protocol. Further, the control parameter may include any type of control parameter that may affect the administering of therapy. For example, the control parameter may relate to a quantity of therapy, a timing of delivered therapy, a rate that therapy is delivered, or a trigger of when or whether to deliver therapy, among other control parameters. Moreover, the control parameters may directly affect the delivery of therapy (e.g., specify a time to deliver the medicament or a quantity of medicament to deliver) or may indirectly affect therapy (e.g., adjust a setpoint range to maintain blood glucose or a rate of insulin accumulation in the subject, which may be used to modify a control algorithm for administering therapy).

[0134] The user modifications may include any change to the control parameter or settings of the automated blood glucose control system. For example, the automated blood glucose control system may track each instance and/or the rate or percentage of times a user reduces or increases a control parameter (e.g., an amount of administered insulin). Further, tracking changes to the control parameter may including tracking how often a user pauses therapy or temporarily adjusted a target blood glucose range, or other control parameter. In addition, tracking changes to the control parameter may include tracking when a user makes changes to the control parameter. For example, the user may generally modify the control parameter at night, but leave the daytime parameter unchanged, or vice versa. In some cases, the automated blood glucose control system may track a subject's weight over time. The weight may be provided by a user and may affect the blood glucose control (e.g., an amount of insulin administered may be related to a subject's weight).

[0135] The automated blood glucose control system may generate a report that tracks user modifications to the control parameter. The report may comprise a measure of the frequency of increases and decreases from the stored control parameter value. Further, the report may include an indicator of a percentage of times a user modified a control parameter higher or lower than the stored control parameter value of the automated blood glucose control system over the tracking period. In some cases, the report indicates the number of times that the infusion of insulin is paused over the tracking period, or the speed (e.g., aggressiveness) that insulin is delivered to the subject.

[0136] Using this report, a clinician or other healthcare provider can determine whether modifications should be made to a control parameter to better manage a subject's

therapy. For example, if it is determined that a subject is raising a blood glucose target level 4-5 times a week during an evening time or nighttime, the clinician may determine that the target setpoint for the evening should be adjusted to reduce the number of occurrences that a user manually adjusts therapy, or control parameter settings for therapy, provided by the automated blood glucose control system. In some cases, the subject may be adjusted therapy based on subjective reasons. In some such cases, the therapy report may enable the clinician or healthcare provider to train the subject on controlling his or her disease. In other cases, the clinician may determine that the subject has a different tolerance for blood glucose than initially determined or than an average subject and may adjust one or more control parameters of the automated blood glucose control system accordingly.

[0137] In some implementations, the automated blood glucose control system may automatically adjust one or more control parameters over time based on the report. For example, if the automated blood glucose control system determines that over a course of a month the subject adjusted lower a daytime target glucose range 20 out of 30 days, the automated blood glucose control system may modify a control parameter to have a lower setpoint range. In some cases, the automated blood glucose control system may communicate the change to a user, such as the subject, a parent or guardian, or a healthcare provider.

Example Backup Therapy Protocol Generation Process

[0138] Figure 8 presents a flowchart of an example backup therapy protocol generation process 800 in accordance with certain embodiments. The process 800 may be performed by any system that can track medicament therapy (e.g., insulin therapy) provided to a subject over time and generate a backup therapy protocol that may be used if a glucose level control system 510 becomes unavailable. For example, the process 800 may be performed by one or more elements of the glucose level control system 510. In some cases, at least certain operations of the process 800 may be performed by a separate computing system that receives indications of medicament therapy provided to the subject 512 from the glucose level control system 510. Although one or more different systems may perform one or more operations of the process 800, to simplify discussions and not to limit the present disclosure, the process 800 is described with respect to particular systems.

[0139] The process 800 begins at block 802 where the glucose level control system 510 receives a glucose level of a subject 512. Receiving the glucose level may include receiving and/or determining a glucose level signal corresponding to a glucose level of the subject. The glucose level signal may be received from the glucose sensor 516 (e.g., a CGM sensor). Alternatively, or in addition, the glucose level may be received from a user that provides the glucose level to the glucose level control system 510 via a user interface, such as a user interface generated by the processor 530 that may be output on a touchscreen by the touchscreen controller 538. The glucose level received from the user may be a glucose level measured using an alternative sensor or measurement mechanism (e.g., diabetes measurement strips) that may be used in place of the glucose sensor 516.

[0140] At block 804, the glucose level control system 510 generates an insulin dose control signal based at least in part on the glucose level signal. In some cases, the insulin dose control signal may be a medicament control signal configured to control a medicament pump to administer medicament (e.g., insulin, counter-regulatory agent, or other medicament) to a subject 512. The dose control signal may be generated using a control algorithm configured to autonomously determine doses of insulin to be administered to or infused into the subject for the purpose of controlling blood glucose of the subject based at least in part on the glucose level or glucose level signal determined at the block 802.

[0141] At block 806, the glucose level control system 510 tracks insulin therapy administered to the subject 512 over a tracking period. The tracking period is typically at least one day, and may be longer. For example, the tracking period may be 1 day, 2 days, a week, a month, several months, a year, any length of time between the foregoing examples, or even longer. In some cases, the tracking period may be continuous from a point in time when tracking begins. For example, the tracking period may encompass the entire usage lifetime of the glucose level control system 510 by the subject 512. In cases where the tracking period is set for a defined period of time (which may be modified for different iterations of the process 800), the process 800 may be repeated periodically, upon request, or upon a triggering event using a new tracking period, of equal or different length. The triggering event may include any event that may render a prior generated backup therapy protocol potentially out-of-date. For example, the triggering event may include a change in medicament type (e.g., different insulin or counter-regulatory agent formulations), a change in physiological characteristics of the

subject 512 (e.g., a change in weight, or sensitivity to different glucose levels or medicament), or a change in average activity level of the subject 512.

[0142] Although the tracking period is typically at least one day enabling the glucose level control system 510 to determine a backup protocol based on data from a full cycle (e.g., waking and sleeping hours) of glucose level control system 510 use, in some cases, the tracking period may at least initially be less than a day. For example, an initial backup therapy protocol may be generated after a half-day's activity. This initial backup therapy protocol may be updated as more data becomes available throughout the day's (and, in some cases, subsequent day's) use of the glucose level control system 510.

[0143] In some cases, the tracking period may be defined by or based on a particular number of insulin administering events. For example, the tracking period may be defined by at least ten instances of generating an insulin dose based on a glucose level signal. As another example, the tracking period may be defined by a minimum number of meal events, correction dose events, and/or basal dose events. For instance, the tracking period may require 3 meals, or 3 meals of each meal type to occur, 2 correction doses, and/or 100 basal doses. It should be understood that the aforementioned number of doses is just an example, and the tracking period may include more or fewer dose amounts. Moreover, the tracking period may be defined or specified as a combination of time and occurrences of a particular number of doses of insulin.

[0144] In some cases, the tracking period may be variable. For example, if the glucose level control system 510 determines that the insulin dose therapy is inconsistent or erratic over the tracking period (e.g., due to inconsistent exercise or eating habits), the tracking period may be extended.

[0145] Tracking the insulin therapy may include storing the insulin dose control signal generated based at least in part on the glucose level signal at the block 804. Alternatively, or in addition, tracking the insulin therapy may include storing an indication of a quantity of insulin (or other medicament) corresponding to the insulin (or other medicament) dose control signal. The insulin dose control signal and/or the indication of the quantity of insulin may correspond to a dose of insulin delivered to the subject 512 as a basal insulin dose, a correction bolus of insulin, and/or as a mealtime bolus of insulin.

[0146] Storing the insulin dose control signal and/or the indication of the quantity of insulin may include storing the insulin dose control signal and/or the indication of the quantity of insulin in a therapy log or any other type of data structure in the memory 540 of the glucose level control system 510. Alternatively, or in addition, the glucose level control system 510 may store the insulin dose control signal and/or the indication of the quantity of insulin at a remote data store. This remote data store may be a local computing system with which the glucose level control system 510 may communicate (e.g., a laptop, desktop, smartphone, or other computing device of the subject 512 or a user). The glucose control system 510 may provide the insulin dose control signal data or the indication of the quantity of insulin to the local computing system via Bluetooth® or other near field communication services, or via a local network. Alternatively, or in addition, the remote data store may be a remote computing system that the glucose level control system 510 may communicate with over a wide area network, such as a wireless area network, a cellular network using IoT based communication technology, cellular communication technology, or any other communication network. In some cases, the wide area network may include the Internet. The glucose level control system 510 may include a wireless radio that enables it to communicate with the local or remote computing system. Further, the remote computing system may be a computing system of a data center or a cloud computing environment.

[0147] Whether a local or remote computing system, the glucose level control system 510 may establish a communication channel with the computing system. This communication channel may be an encrypted channel. Further the communication channel may be a direct end-to-end connection between the glucose level control system 510 and the computing system. Once the communication channel is established, the glucose level control system 510 may transmit the insulin dose control signal data or the indication of the quantity of insulin to the computing system.

[0148] Generally, the operations associated with the blocks 802-806 may be repeated multiple times throughout the course of the tracking period. For example, in some cases, an insulin dose control system associated with basal insulin may be generated up to 288 times a day. Accordingly, tracking the insulin therapy may include storing insulin does control signals and/or corresponding indications of quantities of insulin for a plurality of autonomously determined doses of insulin infused into the subject 512 throughout the tracking period.

[0149] Generally, counter-regulatory agent therapy includes administering a counter-regulatory agent (e.g., glucagon) when there is a risk or occurrence of hypoglycemia. Usually, the counter-regulatory agent is not supplied on periodic or daily basis. However, it can be useful to understand the amount and frequency that counter-regulatory agent is administered to the subject 512. For example, it may help a healthcare worker or user guide or adjust care for the subject 512. Further, tracking counter-regulatory agent use may help determine a minimum quantity of counter-regulatory agent that should be accessible to the subject 512, either in a bi-hormonal pump or for use in injection therapy. In some cases, the block 806 may include tracking the counter-regulatory agent administered during the tracking period. Tracking the counter-regulatory agent therapy may include storing an indication of autonomously determined doses of counter-regulatory agent delivered to the subject 512 responsive to the glucose level signal obtained at the block 802.

[0150] At block 808, the glucose level control system 510 generates a backup therapy protocol based at least in part on the tracked insulin therapy. The backup therapy protocol may be determined based on an average quantity or rate of insulin administered to the user over the tracking period, over different portions (e.g., breakfast, lunch, and dinner, or waking and sleeping hours, etc.) of the tracking period, or in response to particular events (e.g., when eating, when blood glucose level exceeds a threshold level, etc.). The backup therapy protocol may include a backup injection protocol and/or a backup pump therapy protocol. The backup injection protocol may provide a user (e.g., the subject 512, a parent or guardian, or other caretaker for the subject 512) with quantities of insulin that may be administered to the subject 512 via injection. Further, the backup injection therapy may indicate times that the insulin may be administered. For example, the backup injection therapy may indicate quantities of insulin to be administered at particular meal times. Further, the backup injection therapy may indicate an effect that a unit of insulin may have no the subject 512 enabling a user to calculate how much insulin to administer to the subject 512 when a blood glucose reading indicates that the glucose level of the subject 512 is too high (e.g., above a desired setpoint range).

[0151] Similar to the backup injection therapy protocol, the backup pump therapy protocol may provide a user (e.g., the subject 512, a parent or guardian, or other caretaker for the subject 512) with quantities of insulin that may be administered to the subject 512 via a

medicament pump. Using the backup pump therapy protocol, a user may configure the medicament pump to administer the quantities of insulin identified. The backup pump therapy protocol may be used to configure the medicament pump when access to a CGM sensor is unavailable (e.g., the subject 512 does not possess a CGM sensor, or the medicament pump or CGM sensor has a fault, etc.). Further, the backup pump therapy protocol may be useful for providing an initial configuration to a replacement glucose level control system.

[0152] In some cases, the backup injection therapy protocol and the backup pump therapy protocol may be the same. However, often at least the recommended basal therapy settings may differ. It is generally not practicable for insulin to be administered to a subject 512 more than a few times a day via injection therapy. Thus, the backup injection therapy protocol may identify long acting insulin units or doses that may be administered on a limited basis (e.g., once or twice a day). However, the medicament pump may more easily administer insulin on a more than limited basis (e.g., every hour, every half hour, every 5 minutes, etc.). Thus, the backup pump therapy protocol may identify a basal rate of insulin that may be administered once every time unit (e.g., once per hour or once per 15 minutes, or once per five minutes), or continuously at a particular rate (e.g., 0.5 or 0.6 units) per time unit (e.g., per hour). Moreover, the backup pump therapy protocol may identity different rates for different portions of a day (e.g., one rate each half of the day, one rate each quarter of the day, or one rate during typical waking hours and one rate during typical sleeping hours for the subject, etc.).

[0153] In some cases, an initial backup therapy protocol may be generated at the block 808. The initial backup therapy protocol may be updated over time as additional insulin therapy data is obtained.

[0154] Generating the backup therapy protocol may include determining a number of long acting insulin units based at least in part on an average total basal insulin provided to the subject 512 per day over the tracking period. The averaged total basal insulin provided per day may be included in a backup injection therapy protocol as a single dose of long acting insulin that is configured to help maintain the basal insulin level of the subject 512 throughout the day. In some cases, the averaged total basal insulin provided per day may be included in a backup injection therapy protocol as multiple doses of insulin (e.g., 2 or 3 doses throughout the day).

[0155] Alternatively, or in addition, the basal insulin may be included in the backup therapy protocol, such as in a backup pump therapy protocol, as a dosage rate that may be supplied to a pump to provide a rate of basal insulin throughout the day. Further, in some cases, each day of the tracking period may be divided into a plurality of sub-periods. For example, each day of the tracking period may be divided into two, three, four, or more time periods, or equal or different length. In some such cases, generating the backup therapy protocol may include determining an hourly basal rate for each sub-period of the plurality of sub-periods. This hourly basal rate may be determined by averaging the corresponding sub-periods for each day of the tracking period. For example, if each day of the tracking period is divided into two sub-periods (e.g., noon to midnight, and midnight to noon), the basal rate supplied during the first sub-period throughout the tracking period may be averaged and the basal rate supplied during the second sub-period throughout the tracking period may be averaged to determine two basal rates for inclusion in the backup therapy protocol. The basal rate may be determined on an hourly rate, or based on any other time period. Alternatively, the basal rate may be determined based on an amount of time that a particular quantity (e.g., one unit) of insulin is recommended to be administered to the subject 512 as part of the backup therapy protocol. For example, if the glucose level control system 510 determines that the subject 512 is receiving one unit of insulin every 1.125 hours, the backup therapy protocol may indicate the basal rate to be one unit every 1.125 hours. Alternatively, or in addition, the backup therapy protocol may indicate a basal rate of 0.89 units per hour.

[0156] In addition, generating the backup therapy protocol may include determining an average correction bolus provided to the subject per day over the tracking period. The average correction bolus may be determined by adding the total amount of correction doses administered each data, and dividing by the number of days in the tracking period. The average correction bolus may be included in the backup therapy protocol as guidance for the user. However, generally, the correction bolus is supplied in response to a determination that a subject's blood glucose level is spiking or exceeding a threshold, and not necessarily as a daily dose of insulin. Accordingly, the average correction bolus may be included as part of the backup therapy protocol to facilitate the user understanding an amount of insulin that is likely to be required during an average day, which may be useful for the user (e.g., the subject) to determine how much insulin to have accessible to use, for example, in

injection therapy. In some cases, one or more days, or time periods, of the tracking period may be omitted when determining the average correction bolus because, for example, the one or more days or time periods may be determined to be outliers. The outliers may be omitted to provide a more accurate understanding of average insulin needs or consumption.

[0157] In some implementations, the glucose level control system 510 may determine an average change in blood glucose at least partially attributable to a unit of insulin provided as a correction bolus to the subject during the tracking period. In some cases, the glucose level control system 510 may correlate each correction bolus applied during the tracking period to a change in the blood glucose level of the subject 512.

[0158] Generating the backup therapy protocol may include determining, for each mealtime of a plurality of mealtimes per day, an average mealtime bolus of insulin provided to the subject over the tracking period. In some cases, the average mealtime bolus may be determined for particular meals (e.g., breakfast, lunch, and dinner), while other periods of food intake (e.g., snacks or teatime) may be omitted or ignored. Further, the average mealtime boluses may be associated with particular meal sizes as identified by a user. For example, the glucose level control system 510 may determine an average mealtime bolus for a small and a large meal, or for a small, a medium, and a large meal. The average mealtime bolus may be determined by averaging an amount of insulin the glucose level control system 510 determines should be administered to the subject 512 using a control algorithm of the glucose level control system 510 for each mealtime and identified meal size.

[0159] In some cases, the backup therapy protocol may include data relating to the administering of counter-regulatory agent. For example, the backup therapy protocol may include an indication of total counter-regulatory agent and/or daily counter-regulatory agent provided to the subject over the tracking period.

[0160] At block 810, the glucose level control system 510 outputs the backup therapy protocol. Outputting the backup therapy protocol may include displaying the backup therapy protocol on a display enabling a user to implement the backup therapy protocol. Alternatively, or in addition, outputting the backup therapy protocol may include transmitting the backup therapy protocol to a computing device of a user for display and/or storage. In some cases, the backup therapy protocol may be stored at the glucose level control system 510 and

may be accessed in response to a user interaction with a user interface of the glucose level control system 510.

[0161] In some cases, the process 800 can be combined at least in part with the process 900 described below. Thus, in some cases, the backup therapy protocol may further include a record of user modifications to one or more control parameters used by the control algorithm of the glucose level control system 510 to autonomously determine doses of insulin to be infused into or administered to the subject. This record of user modifications may include an identity of instances of user modification to the control parameter and/or a percentage of times a user modified the control parameter during each day of the tracking period and/or during the entire tracking period.

[0162] Figure 9 presents a flowchart of an example control parameter modification tracking process 900 in accordance with certain embodiments. The process 900 may be performed by any system that can track user interactivity with glucose level control system 510, and more specifically, occurrences of a user modifying a control parameter used by the glucose level control system 510 to help control medicament delivery to the subject 512. For example, the process 900 may be performed by one or more elements of the glucose level control system 510. In some cases, at least certain operations of the process 900 may be performed by a separate computing system that receives indications of changes to control parameter settings of the glucose level control system 510 from the glucose level control system 510 and/or from user interaction with a user interface at the separate computing system prior to transmitting the modification to the glucose level control system 510. Although one or more different systems may perform one or more operations of the process 900, to simplify discussions and not to limit the present disclosure, the process 900 is described with respect to particular systems.

[0163] The process 900 begins at block 902 where the glucose level control system 510 receives a glucose level of a subject 512. The block 902 can include one or more of the embodiments previously described with respect to the block 802.

[0164] At block 904, the glucose level control system 510 generates an insulin dose control signal based at least in part on the glucose level signal and a control parameter. The insulin dose control signal may be generated based on a control algorithm that enables the glucose level control system 510 to autonomously determine doses of insulin to be infused into

or administered to the subject to control the blood glucose level of the subject. The control algorithm may determine the doses of insulin based at least in part on the control parameter. The control parameter may include any parameter that can affect the operation or output of the control algorithm, or the operation of the glucose level control system 510, and that is modifiable by a user (e.g., the subject 512 or a user that is at least partially responsible for care of the subject 512 (e.g., a parent or guardian)). In some cases, the control parameter may be, or may correspond to, a target setpoint for the glucose level of the subject 512. In other cases, the control parameter may correspond to whether the glucose level control system 510 is to generate the insulin dose control signal for at least a period of time. For example, the control parameter may relate to whether at least some operation of the glucose level control system 510 is paused or active. The block 904 can include one or more of the embodiments previously described with respect to the block 804.

[0165] At block 906, the glucose level control system 510 tracks one or more user modifications to the control parameter over a tracking period. The tracking period may be one day, less than a day, or it may be longer than one day (e.g., 2 days, 3 days, a week, a month, etc.). Further, the tracking period may include one or more periods of time as previously described with respect to the process 800. The user may be the subject 512 or any other user (e.g., a parent or guardian, or a healthcare provider) that may be permitted to modify a control parameter of the glucose level control system 510.

[0166] The user may modify the control parameter using a user interface that may be generated and/or output by the glucose level control system 510. Alternatively, or in addition, the user interface may be generated and/or output by a computing system that can communicate with and/or modify the control parameter at the glucose level control system 510. For example, the computing system may be a smartphone, a smartwatch, a laptop, or desktop computer, or any other type of computing device that may be used to configure the glucose level control system 510. The user interface may be output on a touchscreen with which the user may interface to modify the control parameter. The user may interact with a control parameter selection element or other user interface element to select and/or modify the control parameter. In some cases, the user may provide the control parameter with any value supported by the glucose level control system 510. In other cases, the user may be limited to selecting particular values for the control parameter, which may be less than the supported

capability of the glucose level control system 510 or less than what other users are permitted to select. For example, a clinician may be granted a greater modification range than a parent for modifying the control parameter.

[0167] Tracking the one or more user modifications may include storing in the one or more user modifications in a therapy log, database, or other data structure. Further, tracking the one or more user modifications may include tracking or storing whether each of the user modifications comprises an increase or a decrease in the control parameter. The determination of whether the control parameter has been increased or decreased may be determined based on whether a value for the control parameter has been increased or decreased relative to a reference value. The reference value may include a current value of the control parameter, a default value, a clinical value supplied to the glucose level control system 510, and/or a value determined by the glucose level control system 510. Further, tracking the one or more user modifications may include storing a time and/or one or more conditions under which the control parameter is modified. For example, the glucose level control system 510 may store a time of day, an activity level of the subject 512 as determined from one or more physiological sensors and/or as identified by a user, a meal being consumed or not consumed, and the like. Moreover, tracking the insulin therapy may include storing an indication of the autonomously determined doses of insulin delivered or administered to the subject 512.

[0168] In some cases, the tracking period may be divided into a plurality of sub-periods. The sub-periods may corresponds to different portions of a day within the tracking period. For example, each day of the tracking period may be divided into two equal halves corresponding roughly to day and night, or into 3 or 4 different periods corresponding to a particular number of hours in the day. The sub-periods may be of equal or unequal length. Tracking the one or more user modifications may include tracking the occurrence of modifications to the control parameter within the sub-periods of the tracking period. Further, the occurrence of modifications within a sub-period of a day within the tracking period may be combined with the occurrence of modifications within a corresponding sub-period of another day within the tracking period. In other words, each occurrence of a modification of a control parameter in a sub-period defined from 9:00-21:00 may be aggregated across days of the tracking period.

[0169] In some cases, a different reference value may be determined for the control parameter for each sub-period. In some such cases, tracking the one or more user modifications may include tracking modifications to the control parameter value with respect to the reference value for the sub-period.

[0170] At block 908, the glucose level control system 510 generates a report of user modifications to the control parameter. Alternatively, or in addition, the repot may be generated by another computing system, such as a cloud computing system or a computing system of a healthcare provider based on data (e.g., occurrences of user modification of the control parameter value) received from the glucose level control system 510.

[0171] The report may include a measure of frequency of increases and decreases from the stored control parameter value. Further, the report may indicate a number of times that operation of one or more features of the glucose level control system 510 has been paused or suspended, or a percentage of the tracking period that operation of one or more features of the glucose level control system 510 has been paused or suspended. Moreover, the report may indicate a magnitude of the modification to each control parameter for each occurrence, in total, and/or on average. In some cases, the report may indicate a percentage of user modifications that are higher or lower than the reference value over the tracking period. Further, cases where the tracking period, or each day of the tracking period, is divided into a sub-period, the report may include a measure of frequency of increases and decreases from a reference value for the control parameter for each sub-period of the tracking period. In some cases, the report may include an identity of user activity that occurred when, or within a threshold time period, of a user modification to a value of the control parameter. For example, the report may identify whether a user was exercising (e.g., swimming, running, dancing, etc.) when a user modification to the control parameter value was made.

[0172] In some embodiments, the block 908 may include storing the generated report at the glucose level control system 510 (e.g., in the memory 540) and/or at a storage of another computing device. In some cases, the computing device may be a computing device of the subject 512 (or parent or guardian). Further, the computing device can be a computing device of a healthcare provider. In some cases, the computing device may be a computing device of a cloud computing service.

[0173] The report may be obtained from the glucose level control system 510 by a wired connection (e.g., a USB cable). Alternatively, or in addition, the report may be obtained via a wireless connection to the glucose level control system 510. For example, the glucose level control system 510 may establish an encrypted connection to a computing system of a healthcare provider, which may receive the report from the glucose level control system 510. Alternatively, or in addition, the glucose level control system 510 may establish an encrypted communication channel with a cloud computing provider, which can receive the report from the glucose level control system 510. This report may then be accessed by any authorized users.

[0174] Advantageously, in certain embodiments, a healthcare provider can use the report to help manage care of the subject 512. For example, if the healthcare provider determines that a user is modifying the control parameter more than a threshold number of times or during particular time periods, the healthcare provider may use this information to modify the care being provided to the subject 512 and/or to educate the subject 512 on optimal care. For example, the rate of therapy may need to be modified or the amount of insulin may be too low for the subject's comfort. For example, in some cases, a subject 512 may have a different tolerance to a blood glucose level than the average user leading the user to modify a setpoint range. Understanding this information can help the healthcare provider manage care of the subject 512 (e.g., adjusting the initial setpoint range, or modifying a type of insulin prescribed).

[0175] Further, as indicated above, the process 900 may be combined with the process 800. In other words, a report may be generated that includes both backup therapy protocols and a record of the number of times a user may a modification to one or more control parameters of the glucose level control system 510. In other cases, the processes 800 and 900 may be triggered and/or performed independently.

Example Backup Therapy Reports

[0176] Figures 10-12 illustrate one non-limiting example of a backup therapy report, or a set of reports, that may be generated using one or more of the embodiments disclosed herein. In other words, the reports of Figures 10-12 may be portions of a single report generated by the glucose level control system 510, or may be separate reports that are concurrently generated or that are generated based on different data and/or over different

tracking periods. The report may be generated by the automated blood glucose control system 510, or by another computing system that may receive therapy data from the automated blood glucose control system. Further, Figures 10-12 represent just one non-limiting example of a report or set of reports that may be generated. It is possible for other reports to be generated that include more or less data. For example, the backup injection therapy protocol and the backup pump therapy protocol illustrated in Figure 10 may be separated into two separate reports that may be separately generated and/or accessed.

[0177] Figure 10 illustrates an example backup therapy protocol report 1000 in accordance with certain embodiments. The amount of insulin recommended under different ties and/or conditions may be displayed in units. In some cases, the report 1000 may identify the quantity of insulin included in a unit and/or the type of insulin. Further, in some cases, the report 1000 may be an interactive report that enables a user to modify a type of insulin or a unit size of insulin. In some such cases, the table 1002 may update the recommended number of units of insulin to administer under particular times or conditions based on the type of insulin and or unit size of insulin selected.

[0178] The report 1000 may identify the length of the tracking period 1006 used to determine the backup therapy protocol. Further, the report 1000 may identify the time or date range 1008 during which the tracking period 1006 occurred. Advantageously, knowing the tracking period 1006 may help determine an amount of trust to place in the recommendations included in the backup therapy protocols. The longer the tracking period, the more likely that the recommendations are accurate. A shorter tracking period is more susceptible to less accurate recommendations because, for example, the tracking period may encompass more days that are outliers for the subject's typical condition or activity level. For example, a tracking period of one day that occurs on a day when a subject consumed larger than normal meals or exercised significantly more than normal may result in backup therapy recommendations that do not match the subject's typical lifestyle. Further, knowing when the tracking period occurred may be useful to determine how current the recommendations are and whether they are a reliable indicator of an amount of insulin a subject should administer. For example, if the date range 1008 of the tracking period 1006 is a year old, and the subject has gained or lost significant weight over the year, the backup therapy protocol may no longer be

a reliable indication of recommended injection therapy. In such cases, a user may adjust the recommendation and/or trigger a new occurrence of the process 800.

[0179] The table 1002 illustrates an example backup injection therapy protocol, which may indicate various insulin doses that may be administered to the subject 512 at various times or under various conditions using injection therapy. The table 1002 identifies an amount of insulin the subject 512 may inject when consuming a usual-sized meal for breakfast, lunch, or dinner. The usual-sized meal may refer to the size of a meal that the particular subject 512 usually consumes or has been advised to consume by a healthcare provider. The units of insulin specified may refer to an amount of insulin that the automated blood glucose control system 510 provides the subject 512 on average when the user consumes the identified usual size meal. In some cases, the table 1002 may further include recommended insulin doses for different size meals. For example, each breakfast may illustrated three different values (e.g., 5 units, 6 units, and 8 units) corresponding to light or smaller than usual breakfast, usual size breakfast, and heavy or larger than usual size breakfast.

[0180] It should be understood that the amount of insulin delivered may vary over time and/or based on the condition of the patient at a particular time. Thus, as indicated at the top of the report 1000, the recommendations in the backup therapy protocols are suggested for temporary use for a particular quantity of time (e.g., up to 72 hours in the illustrated example). The quantity of time for which the recommendations are valid may vary based on the subject 512, the amount of historical data collected (e.g., the size of the tracking period), the amount of daily variation in the subject's blood glucose level, or any number of other factors that may affect the amount of time that the backup therapy protocol can be safely followed.

[0181] As illustrated by table 1002, the backup injection therapy protocol may further identify an amount of long lasting insulin a subject 512 is recommended to administer each day (or at certain times throughout the day). This long lasting insulin may be used in place of the basal insulin that the glucose level control system 510 may provide on a periodic basis.

[0182] In addition, the table 1002 identifies the reduction in glucose level attributable to one unit of insulin. For example, as illustrated in the table 1002, the automated blood glucose control system 510 has determined that one unit of insulin (e.g., $1/100^{th}$ of a milliliter of insulin) may reduce a subject's 512 blood glucose level by 9 mg/dL. Accordingly, a user implementing injection therapy may measure a subject's 512 blood glucose level,

determine a difference between the measured blood glucose level and a desired setpoint or threshold glucose level, and divide the difference by 9 to determine a number of units of insulin to inject in response to a determination that a correction dose is warranted (e.g., that blood glucose is outside of a desired setpoint range).

[0183] The table 1004 of the report 1000 provides an example of a backup pump therapy protocol. As illustrated, the backup pump therapy protocol may have the same therapy information as the backup injection therapy protocol for meal times and for the correction factor. However, because a pump may be capable of providing periodic basal therapy, the long acting insulin units of the injection therapy may be replaced with a basal rate indicating a rate at which the backup or replacement pump should administer insulin to the subject. As illustrated, the basal rate may vary over time. In the illustrated example, a basal rate is supplied for four different time periods constituting a 24-hour day. However, the basal rate may be divided into a fewer (e.g., 2 twelve-hour blocks) or greater (e.g., every four hours) number of periods, with each time period potentially having a different basal rate as determined based on the historical therapy data provided by an automated blood glucose control system.

[0184] In some cases, the report 1000 may include additional data that may be tracked over the tracking period. This additional data may include any data that may facilitate care of the subject 512 and/or maintenance of the automated glucose level control system 510. Some non-limiting examples of additional data that may be tracked and included in a report using, for example, the process 800 or 900 are illustrated in chart 1010 of the report 1000. For example, as illustrated in the chart 1010, the report may include the average blood glucose level of the subject 512 over the tracking period and/or the corresponding estimated A1C percentage. Further, the report 1000 may indicate the amount or percentage of time that the subject's blood glucose level is within a desired setpoint range and/or is above the desired setpoint range. Similarly, the report 1000 may indicate the amount or percentage of time that the subject's blood glucose level is below a threshold blood glucose level.

[0185] In addition, the report 1000 may indicate the average number of meal announcements per day. As illustrated in the chart 1010, the subject 512 from which the example report 1000 was generated made an average of 4.2 meal announcements indicating that on average, the subject consumed more than 3 meals a day. In some cases, the report may further indicate the types of meals announced (e.g., two breakfasts, one lunch, and one dinner).

The second breakfast may be a large snack that is roughly equivalent in size to a small breakfast for the subject. Thus, the subject may have made an additional breakfast meal announcement. In some cases, the automated glucose level control system 510 may support a separate snack or other meal announcement option.

[0186] The report 1000 may further include the total amount of insulin administered to the subject per day, and/or the total amount of counter-regulatory agent (e.g., glucagon) administered to the subject per day. In addition, the report 1000 may indicate the amount of percentage of time that the automated glucose level control system 510 is able to connect or communicate with the CGM sensor over the tracking period, which may correspond to the amount of time that the automated glucose level control system 510 functions in an online mode during the tracking period.

[0187] Figure 11 illustrates an example control parameter modification report 1100 in accordance with certain embodiments. As previously stated, the report 1100 may be a separate report generated using, for example, the process 900. Or, the report 1100 may be included as a second within the report 1000.

[0188] The report 1100 may generally provide an indication of the number or percentage of times that a user modified one or more control parameters of the automated glucose level control system 510 during a tracking period. Further, as with the report 1000, the report 1100 may identify the time or date range 1008 during which the tracking period 1006 occurred. In some cases, a user may interact with the report 1100 to determine the number of percentage of times that the user modified one or more control parameters during a subset of the tracking period. Similarly, the user may filter or narrow the date range to view other data described herein for a subset (e.g., a selected data range) of the tracking period.

[0189] The report 1100 may include a graph 1102 that illustrates the subject's blood glucose level with respect to the desired target setpoint range over the course of a day during the tracking period. This day can be an average of the values obtained for each day over the tracking period, or it can illustrate a particular selected day.

[0190] Further, the report 1100 may include a table 1104 that indicates the percentage of times that a user modified the blood glucose target during specific time periods. In the table 1102 of the non-limiting example report 1100 indicates two time-periods, daytime and nighttime. However, it should be understood that the table 1104 may indicate fewer or

more time periods. Further, the time periods may indicate specific times (e.g., from 9:00 to 21:00 and from 21:00 to 9:00) for the time periods.

[0191] As illustrated, the table 1104 may indicate the percentage of times that a user increased or decreased glucose target setpoints. In addition, the report may indicate the percentage of times that the user did not modify, or left as usual, the glucose target setpoint. This target setpoint indicated in the table 1104 may refer to a single target value (e.g., 110 mg/dL, 125 mg/dL, 130 mg/dL, etc.), or may refer to a target setpoint range (e.g., 70-180 mg/dL).

[0192] In addition, the report 1100 may indicate the number of times that a user set a temporary glucose target during the tracking period (the temporary target count 1106) or a selected data range. The report may also indicate a number of times that the user paused therapy during the tracking period (e.g., the paused insulin therapy count 1108) and/or the selected date range.

[0193] The blood glucose of a subject may be affected by a subject's weight. Accordingly, the subject may provide updates of weight to the automated blood glucose control system. In some such cases, the report may indicate a change in weight and when the weight parameter was modified (e.g., body weight data 1110). In some cases, the report 1100 may be filtered to show data before and after a weight change separately. The body weight data may be helpful for the healthcare provider to, for example, determine whether weight change may at least in part have been a basis for user modifications to target glucose levels. Generally, the automated glucose level control system 510 (e.g., using blood glucose readings) will automatically account for the effect weight changes may have on blood glucose control. However, the subject 512 may feel differently. The ability to collect the modification data relating to a user's modification of the automated glucose level control system 510 and to correlate the data with weight changes can assist a healthcare provider in better treating the subject 512 by, for example, adjusting settings of the automated glucose level control system 510, changing insulin prescriptions, educating the subject 512, or any other action that may improve care of the subject 512.

[0194] In some cases, the report may omit changes to blood glucose target settings that are below a threshold. In other words, minor changes that may be statistical noise may be ignored. Further, in some cases, the report may indicate when control parameters (e.g., at

bedtime, with respect to a particular meal, such as dinner, etc.) are modified. In some cases, the report may also indicate the duration of the change to the glucose target set point, or other control parameter.

[0195] Figure 12 illustrates an example meal selection report 1200 that may be included as part of some implementations of the control parameter modification report 1100 of Figure 11 in accordance with certain embodiments. The report 1200 may include a table 1202 identifying the average number of times per day that a user (e.g., the subject 512) announces each meal type. Typically, a user will announce a meal 0 or 1 times a day. However, in some cases, a user may announce a particular meal time more than 1 time to account, for example, for large snacks that may be similar in size to a particular meal. Smaller snacks often may be handled by the control algorithm of the automated glucose level control system 510 (e.g., by the corrective insulin controller 626) without a meal announcement.

[0196] Further, the table 1202 may identify the number of times over the tracking period, or selected time period within the tracking period, that meals of particular sizes are announced by a user. For example, the table 102 may indicate the number of times that a usual size meal is announced, a smaller than usual size meal is announce, or a larger than usual size meal is announced.

Automated Blood Glucose Control Refinement

[0197] An automated blood glucose control system (e.g., the glucose level control system 510) may automatically provide insulin and/or a counter-regulatory agent (e.g., Glucagon) to a subject 512 to help control the blood glucose level of the subject 512. Generally, a control algorithm may be implemented by the automated blood level glucose control system 510 to determine when to deliver insulin and how much insulin to provide to the subject. Further, the control algorithm may control both an ongoing or periodic delivery of insulin (e.g., a basal dose), and a correction bolus that may be provided to adjust a subject's blood glucose level to within a desired range. The control algorithm may use blood glucose level readings obtained from a sensor, such as a continuous glucose monitoring (CGM) sensor, that obtains automated blood glucose measurements from the subject. Moreover, in some cases, the control algorithm may deliver a bolus of insulin in response to an indication of a meal to be consumed or being consumed by the subject 512.

[0198] Insulin may be administered subcutaneously into blood of a subject 512. There is often a delay between when the insulin is provided and when the amount of insulin in the subject's blood plasma reaches maximum concentration. This amount of time may vary based on the type of insulin and/or on the physiology of the particular subject. For example, with a fast-acting insulin, it may take approximately 65 minutes for a bolus of insulin to reach maximum concentration in the blood plasma of one subject, but 60, 64, or 70 minutes for another subject. For some other types of insulin, it may take anywhere from 3-5 hours to reach maximum concentration in the blood plasma of the subject. Accordingly, the blood glucose control system may implement a predictive algorithm that implements a bi-exponential pharmacokinetic (PK) model that models the accumulation of insulin doses in the blood plasma of the subject over time. The blood glucose control system may modify its predictions based on the type of insulin, one or more blood glucose readings, and/or physiological characteristics of the subject. The physiological characteristics may include characteristics shared among large portions of the population (e.g., weight, gender, age, etc.) as well as characteristics that may be unique or specific to the subject, or shared among few people (e.g., characteristics related to genetics).

[0199] Differences between the physiologies of different subjects may result in differences in the optimal blood glucose range for each subject, or some subject of subjects. Further, the differences in physiologies may also affect the absorption of insulin into the blood plasma. In other words, different physiologies of difference subjects may result in insulin absorption taking different amounts of time for difference subjects. Thus, while the maximum concentration of glucose in blood plasma may be 65 minutes after a bolus of fast-acting insulin for one subject, it may be 60 minutes or 70 minutes for another subject.

[0200] As indicated above, a blood glucose system, such as an automated blood glucose system, may control delivery or administering of insulin or a counter-regulatory agent based on a bi-exponential PK model and one or more blood glucose measurements of the subject. The bi-exponential PK model may model the absorption of subcutaneously administered insulin into blood and/or a rate of diminishing glucose in the blood. The bi-exponential PK model over time may be represented by the following equation:

$$p(t) = KU_0(e^{-\alpha_1 t} - e^{-\alpha_2 t}) \quad 2$$

where U_0 is the subcutaneous dose in units (U), K is a scaling constant, and α_1 and α_2 are time constants. The peak time of absorption of insulin may be referred to as Tmax and can be determined based on the following equation:

$$\log(\alpha_2/\alpha_1)/(\alpha_2 - \alpha_1) \quad 3$$

[0201] Often, the blood glucose control system is configured to maintain a subject's blood glucose within a particular range. As blood glucose rises or falls, the blood glucose control system may administer particular amounts of insulin or counter-regulatory agent to the subject to bring the blood glucose level of the subject back to within a desired range or closer to a desired setpoint. As explained above, it may take some non-infinitesimal amount of time for the medicament to be absorbed into the subject's blood stream. Thus, the bi-exponential PK model may be used to determine how much insulin or counter-regulatory agent to administer. The bi-exponential PK model may predict the blood glucose level of the subject over time as insulin or counter-regulatory agent is administered. The parameter values of the bi-exponential PK model may be set by a healthcare provider based on default values obtained through clinical trials and/or based an individualized treatment plan for the subject as may be determined based on clinical tests of the subject and/or on the healthcare provider's evaluation of the subject, which may be determined based on tests of the subject.

[0202] However, as previously indicated, each subject may differ. Thus, although clinical data may determine optimal or recommended values for an average subject through one or more trials, the determined data may not be optimal for a particular subject. Moreover, individualized treatment plans are typically based on point-in-time measurements. These point-in-time measurements may provide a good guideline for treatment, but the optimal parametric values for a subject may vary at different times of day, due to different activities, due to changes in the subject over his or her lifetime, or for any other number of reasons.

[0203] The glucose level control system 510 of the present disclosure can implement a method or process to autonomously and/or automatically modify one or more control parameters of a control algorithm to modify therapy provided to the subject using the glucose level control system 510. The method may be performed by a hardware processor 530 and/or a controller 518 that controls the administering of therapy. The system can provide therapy (e.g., insulin) to a subject in response to a determination of a blood glucose level of

the subject. The blood glucose level may be determined based at least in part on a glucose level signal obtained from a glucose level sensor that is operatively connected to a subject. The determination of the therapy (e.g., an amount of insulin or counter-regulatory agent) may be based at least in part on the blood glucose level and/or the bi-exponential model. Moreover, the determination of therapy may be based at least in part on a value or setting of one or more control parameters of the blood glucose control system. The one or more control parameters may be, or may correspond to, one or more parameters of the bi-exponential PK model, or any other model or control algorithm used to control the administering of therapy to the subject.

[0204] The system 510 may provide the therapy based on the value or setting of the one or more control parameters. The value or setting of the one or more control parameters may be based on an initial configuration of the blood glucose control system 510 by a healthcare provider, subject, or other user. Further, the initial configuration may be based on clinical data or data obtained that is specific to the subject. In some cases, a control parameter may be a time constant used by a control algorithm of the blood glucose control system. This time constant may be used in a calculation of an accumulation of insulin in the subject by the control algorithm. Further, the control parameter may be used to control an insulin dosing response of the control algorithm to a blood glucose excursion in the subject as indicated by a glucose level signal obtained from a glucose level sensor. In some cases, the control parameter may be, or may be related to, Tmax. For example, the control parameter may be an estimate of Tmax or a fraction (e.g., 0.5) of Tmax. As previously explained, Tmax may be the peak time of absorption of insulin, or the amount of time until the concentration of insulin from an insulin dose reaches maximum concentration in the blood of the subject.

[0205] Moreover, the control parameter may be associated with a setpoint or target blood glucose level, or a blood glucose range. For example, the control parameter could relate to a point in time when an estimated amount of "insulin on board" (e.g., an amount of insulin in the subject as determined by a model of insulin accumulation and/or utilization in the subject) falls below a threshold value. As another example, the control parameter can be a clearance time for insulin boluses (e.g., an estimate of an amount of time for an administered bolus of insulin to be utilized by the subject). In some cases, the control parameter may relate to $T_{1/2}$, which corresponds to a time when the concentration of insulin in the blood plasma

reaches half of the maximum concentration in the blood plasma. In some cases, the control parameter may be a parameter that can be used to calculate Tmax or $T_{1/2}$.

[0206] The system may determine an effect of the supplied therapy. The effect may be determined by analyzing a glycemic control of blood glucose in the subject as indicated by the glucose level signal received from the glucose level signal. In some cases, the system may measure or determine the effect of the supplied therapy over time. Moreover, in some cases, the system may continue to supply therapy to the subject over several therapy delivery times or instances and may average or otherwise aggregate the measured or determined effects of the therapy over the several therapy delivery times or instances.

[0207] Based at least in part on the provided therapy and the determined effects of the therapy (e.g., the changes in blood glucose level attributed to the therapy), the system 510 may autonomously determine a modification to one or more control parameters. For example, the system may modify the Tmax value used by the blood glucose control system to determine insulin therapy to provide the subject. The directional modification (e.g., increase or decrease) of the control parameter value may depend on the determined effect of the initial or prior control parameter value of a control parameter. Moreover, the directional modification of the control parameter value may depend on a difference between the effect of the blood glucose therapy and an expected effect of the blood glucose therapy.

[0208] Using the modified control parameter, the system 510 may determine therapy to deliver to the subject 512 at a therapy delivery time. As with the initial control parameter, therapy may be delivered during one or more therapy delivery times based on the modified control parameter. The system may determine the effect of the therapy delivered based on the modified control parameter using one or more of the embodiments previously described with respect to the therapy delivered using the initial control parameter.

[0209] The system can compare the measured or determined effects from the therapy delivered using the initial control parameter and the therapy delivered using the modified control parameter. Based on the comparison, the system can determine which control parameter value is preferable for the subject. The comparison may be performed in real-time, or substantially in real-time. Further, the comparison may be performed by the system 510 without user interaction. The preferable control parameter value generally being the control parameter that causes the blood glucose level of the subject to be closer to a desired range or

setpoint for the subject. In some cases, the comparison may be based on a statistical or regression based analysis. The system can set or maintain the control parameter to have the value that generated blood glucose levels that are closer to the desired range or setpoint for the subject for subsequent therapy.

[0210] In some cases, the system 510 may repeat the process for different control parameter values enabling the system to refine the blood glucose control for the subject over time. In subsequent performances of the process, the initial control parameter value may not be an initial value, but may be the most recent selected value for the control parameter based on the determined effects of the control parameter.

[0211] In some cases, the determination of a second or modified value for a control parameter, or the modification of the control parameter may be triggered based on a glucose level of the subject not satisfying a threshold. Alternatively, or in addition, a process of modifying a control parameter value may be triggered based on a difference between an expected glucose value of a subject and an expected glucose value of a subject after the administering of therapy exceeding a threshold.

[0212] Using the embodiments described herein, the value of a control parameter may be autonomously modified without interaction by a subject or user with the blood glucose control system. In other words, the blood glucose control system can automatically adjust and/or refine a control parameter used by a control algorithm for glycemic control of the subject.

[0213] As previously described, the blood glucose control system may provide both insulin therapy and counter-regulatory agent therapy to a subject. In some cases, the blood glucose control system may only provide insulin therapy. In some such cases, the blood glucose control system may output an indication of an amount of counter-regulatory agent that may or should be administered to the subject based on a detected condition of the subject.

[0214] The active control parameter value used by the control parameter may remain active until a subsequent occurrence of the therapy modification process. In some cases, performance of the therapy modification process is continuously performed with the control parameter value being modified based at least in part on a determined effect of the prior control parameter value. In other cases, the therapy modification process is performed until the determined effect of the therapy satisfies a desired threshold (e.g., when the detected blood

glucose level is within a threshold of a setpoint or median setpoint value). In some cases, the therapy modification process is performed a set amount of times and the control parameter value that provides the best outcome (e.g., closes to desired blood glucose level) is set as the active control parameter for subsequent therapy. In some cases, different sites on the subject (e.g., back, stomach, leg, or arm) may result in different blood glucose absorption rates. Thus, in some such cases, the therapy modification process may be performed each time the blood glucose control system is moved to a different site on the subject.

Example Automated Blood Glucose Control Refinement Process

[0215] Figure 13 presents a flowchart of an example automated blood glucose control refinement process in accordance with certain embodiments. The process 1300 may be performed by any system that can autonomously and/or automatically modify a control algorithm and/or a control parameter that affects execution of the control algorithm based on feedback (e.g., from a blood glucose signal) relating to therapy administered to a subject 512. For example, the process 1300 may be performed by one or more elements of the glucose level control system 510. In some cases, at least certain operations of the process 1300 may be performed by a separate computing system that receives blood glucose data from the glucose level control system 510. Although one or more different systems may perform one or more operations of the process 1300, to simplify discussions and not to limit the present disclosure, the process 1300 is described with respect to particular systems.

[0216] The process 1300 may be performed automatically and without user interaction. In some cases, a user may trigger the process 1300 via a command or interaction with a user interface. However, once the process 1300 is triggered, the process 1300 may be performed automatically. Further, the process 1300 may be performed continuously, periodically, or in response to a trigger. The trigger may be time based and/or based on a measurement of the glucose level of the subject. For example, the trigger may correspond to a determination that a glucose level of a subject differs by more than a threshold from a predicted glucose level that is predicted by a glucose level control algorithm based on the administering of medicament. Further, the trigger may be based on the activation or first time use of the glucose level control system 510 by the subject 512.

[0217] The process 1300 begins at block 1302 where the glucose level control system 510 receives a glucose level signal corresponding to the glucose level of a subject 512. The glucose level signal may be received from a glucose sensor capable of measuring the level of glucose in the blood of the subject. For example, the sensor may be a continuous glucose monitoring (CGM) sensor. The block 1302 can include one or more of the embodiments previously described with respect to the block 802 or 902.

[0218] At block 1304, the glucose level control system 510 provides a first therapy during a first therapy period to the subject 512. The first therapy may be based at least in part on the glucose level signal and a first value of a control parameter. The control parameter may include any control parameter that affects operation of the glucose level control system 510 and/or performance of a control algorithm of the glucose level control system 510. The control algorithm may include any control algorithm used to determine a dose of medicament (e.g., insulin) to administer to the subject 512. In other words, the controller 518 or the processor 530 may use the control algorithm to generate a dose control signal based at least in part on a value (e.g., the first value of the block 1304) of the control parameter to cause the delivery device 514 to administer a dose of insulin or other medicament.

[0219] In some cases, the control algorithm may be based on the PK model (equation 2). Further, in some cases, the control parameter may be Tmax, which may be calculated using equation 3. In other cases, the control parameter may be $T_{1/2}$, which may relate to the amount of time for the dose of insulin in the blood stream to drop to ½ of the maximum concentration in the blood attributable to the dose administered to the subject 512. In some cases, the control parameter corresponds to a time until insulin within blood plasma of the subject reaches a particular concentration level subsequent to administration of an insulin dose. Moreover, in some cases, the control parameter may be a parameter that affects the determination of Tmax, such as one or more of the time constants α_1 and α_2. In some implementations, the control parameter may be used by the control algorithm to account for and/or determine an accumulation of insulin (or other medicament) in the subject 512 and/or a rate of diminishment of the insulin (or other medicament) in the subject 512. In some cases, the control parameter may be used to control an insulin dosing response of the control algorithm to a blood glucose excursion in the subject as indicated by the glucose level signal received at the block 1302.

[0220] In some instances, the control parameter may relate to at least one time constant used in a calculation of an accumulation of insulin in the subject by the control algorithm, such as one or more of the time constants α_1 and α_2 that may be used in the calculation of Tmax. In some cases, the control parameter may correspond to a rate of insulin diminishment in the subject 512. In some cases, the control parameter may relate to a target setpoint or a target setpoint range for maintaining or attempting to maintain the subject's 512 blood glucose level.

[0221] The first therapy may correspond to a single administering of insulin to the subject 512. This single administering of insulin may be any type of insulin administered for any reason. For example, the insulin dose may be a basal insulin dose, a priming dose, a dose supplied in response to a meal announcement, or a correction dose of insulin. Moreover, the first therapy may be medicament other than insulin, such as counter-regulatory agent (e.g., glucagon). In some cases, the first therapy may be a plurality of medicament (e.g., insulin and/or counter-regulatory agent) doses supplied or administered to the subject 512 over the first therapy period. Further, the plurality of medicament doses may include a variety of types of medicament doses, such as one or more basal doses, one or more meal doses associated with one or more meal announcements, one or more corrective doses, etc.

[0222] The first therapy period may be a time period that corresponds to a single medicament dose. Alternatively, the first therapy period may be a time period that encompasses a plurality of medicament doses. Further, the time first therapy period may be a time period associated with a defined length of time. Alternatively, or in addition, the first therapy period may defined based on a number of medicament periods. In other words, the time period may vary based on the amount of time it takes to deliver or administer a specified number of doses of medicament (of any type or of a particular type).

[0223] The first value may be selected based on a prior therapy or a prior performance of the process 1300. In some cases, the first value is selected based on a baseline value. The baseline value may be associated with clinical data, or it may be determined based on initial operation of the glucose level control system 510 for some period of time before performance of the process 1300. Alternatively, or in addition, the first value may be selected based on clinical data or a particular prescription for the subject 512. In some cases, the first value may be based on clinical data for average users or average users that share certain

physiological data with the subject 512. In some cases, the first value is determined based on a healthcare provider's assessment of the subject 512. Further, the first value may be determined based on an infusion site (e.g., back, stomach, leg, etc.) for the glucose level control system 510. In some cases, the first value may be selected based on demographics or characteristics of the subject 512. For example, the first value may be based on the subject's 512 gender, weight, body mass, or age.

[0224] At block 1306, the glucose level control system 510 determines a first effect corresponding, or attributable, at least in part to the first therapy. Determining the first effect may include receiving a glucose level signal from the glucose level sensor operatively connected to the subject. This glucose level signal may be a subsequent or updated glucose reading that is more recent than the glucose level signal received at the block 1302. The glucose level signal received at the block 1302 may be used to determine therapy to administer to the subject 512 and the glucose level signal received at the block 1306 may be used to determine a result of the administered therapy. It should be understood that glucose level signals may be received continuously or periodically and can be used to both determine therapy to administer and to determine the effect of the administered therapy.

[0225] In some cases, determining the first effect may include analyzing glycemic control of blood glucose in the subject as indicated by the glucose level signal. Analyzing the glycemic control of the blood glucose in the subject may include tracking the blood glucose level of the subject 512 over time. Further, analyzing the glycemic control of the blood glucose in the subject may include comparing the blood glucose level of the subject 512 over time to a predicted blood glucose for the subject 512 over time as predicted based on the control algorithm using the selected value for the control parameter. Comparing the blood glucose level of the subject 512 over time to the predicted blood glucose level may include determining whether, or to what degree, the accumulation and/or diminishment of insulin (or other medicament) matches a predicted accumulation or diminishment of insulin (or other medicament) based on the blood glucose level signal obtained from the CGM sensor.

[0226] At block 1308, the glucose level control system 510 generates a second value for the control parameter. This second value may be autonomously determined. Further, in some cases, the second value may be automatically determined. In some cases, the second value is determined based at least in part on a user triggering the blood glucose control

refinement process 1300. The second value may be an increase or decrease of the control parameter compared to the first value. The second value may be limited to a particular maximum change from the first value. Further, the second value may be selected based at least in part on the first effect. For example, if the first effect corresponding to the first value results in blood glucose being near an upper range of the setpoint range, the second value may be selected in an attempt to being the blood glucose level closer to the middle of the setpoint range. Further, the second value may be selected based at least in part on characteristics of the subject 512, such as age, weight, gender, or any other characteristics that may affect blood glucose management. In some cases, the second value may be determined based at least in part on an assessment or input of the subject 512 with respect to the first value or the first effect. For example, if the subject 512 feels woozy, dizzy, lightheaded, nauseous, or otherwise uncomfortable during the first therapy period, the subject 512 may, via, for example, a user interface of the glucose level control system 510 indicate how the subject 512 is feeling. The second value may be selected based at least in part on the assessment provided by the subject 512 in an attempt to reduce the symptoms felt by the subject 512.

[0227] In some cases, the second value of the control parameter may be generated based at least in part on a baseline value of the control parameter and an output of a function defined based on glycemic control of the subject. The glucose level signal can represent an indication of the glycemic control of the subject during the first therapy period. The baseline value of the control parameter may correspond to the first value used to provide therapy at the block 1304. This baseline value may be a last known optimal value for the subject prior to any changes to the subject (e.g., change in weight, insulin type, or metabolism changes, etc.). Alternatively, or in addition, the baseline value may be a value determined by a healthcare provider. In some cases, the second value of the control parameter is based at least in part on glycemic control indicated by the glucose level signal.

[0228] The second value of the control parameter may be selected based on performance of a regression analysis between a time of absorption of subcutaneously administered insulin into blood of the subject and a glycemic control function. The glycemic control function may be based at least in part on the glucose level signal. In some cases, the regression analysis may be performed between Tmax or $T_{1/2}$ and one or more of the time constants α_1 and α_2.

[0229] At block 1310, the glucose level control system 510 changes the control parameter to the second value. Changing the control parameter to the second value causes a change in the operation or execution of the control algorithm. This change in the execution of the control algorithm may result in a change in one or more factors associated with the provisioning of therapy to the subject 512. For example, the changing in the execution of the control algorithm may result in a change in an amount of medicament delivered, a timing of the delivery of the medicament, a rate at which a dose of medicament is delivered to the subject 512, a target setpoint or target range for the blood glucose of the subject, a threshold used in determining whether to deliver medicament (e.g., a threshold difference from the target setpoint), or any other factor that may affect therapy delivered to the subject 512. In some cases, the second value may be a modification to Tmax or $T_{1/2}$. It should be understood that Tmax and/or $T_{1/2}$ may, at least in part, be based on the physiology or biochemistry of the subject 512. Thus, the setting of either Tmax or $T_{1/2}$ for the setting of the first value and the second value may refer to setting a parameter of the control algorithm representative of or corresponding to Tmax and/or $T_{1/2}$. For example, the setting of the first value and the second value may include setting the control parameter to a value determined or estimated to be Tmax and/or $T_{1/2}$ for the subject 512. However, the set value may differ from the actual Tmax and/or $T_{1/2}$ for the subject 512. Further, as Tmax and/or $T_{1/2}$ may vary for different subjects, it is not always possible to explicitly set or determine Tmax and/or $T_{1/2}$ for a subject. Instead, Tmax and/or $T_{1/2}$ may be estimated or deermined by comparing the effects and/or blood glucose levels determined for different control parameter values that correspond, at least in part, to Tmax and/or $T_{1/2}$. Using the process 1300, the control parameter may iteratively approach the actual Tmax and/or $T_{1/2}$ for the subject 512, or within a threshold of the actual Tmax and/or $T_{1/2}$ for the subject 512. Alternatively, using the process 1300, the control parameter (such as one or more of the time constants α_1 and α_2) may iteratively approach a value that corresponds to the actual Tmax and/or $T_{1/2}$ for the subject 512.

[0230] At block 1312, the glucose level control system 510 provides second therapy during a second therapy period to the subject 512. The second therapy is based at least in part on the updated control parameter that is updated to the second value at the block 1310. As with the first therapy, the second therapy may refer to one or a plurality of medicament doses. Further, the second therapy period may refer to a specific amount of time, an amount of

time to deliver a particular number of medicament doses, or a particular number of medicament doses. In some cases, the block 1312 may include one or more of the embodiments described with respect to the block 1304, but using the second value for the control parameter over the second therapy period.

[0231] At block 1314, the glucose level control system 510 determines a second effect corresponding at least in part to the second therapy. The block 1314 may include one or more of the embodiments described with respect to the block 1306, but with respect to the second therapy.

[0232] At block 1316, the glucose level control system 510 selects one of the first value or the second value based at least in part on a comparison of the first effect and the second effect. The comparison of the first effect and the second effect may be performed autonomously without action by a user. The glucose level control system 510 may select the one of the first value or the second value to be a current or active value for the control parameter based on whether the first effect or the second effect results in improved care (e.g., closer to a desired setpoint for a greater period of time, or less volatility in blood glucose values, or any other factor that a healthcare provider may use to evaluate the success of diabetes management) for the subject 512. In some cases, the glucose level control system 510 selects a third value to the current or active value for the control parameter. The third value may be selected based on the comparison of the first effect and the second effect. For example, if it is determined that the first effect is preferable to the second effect, the third value may be selected based on a change to the first value in the opposite direction as the change made to the first value to obtain the second value. For instance, if in the prior example, where it is determined that the first effect is preferable to the second effect, the first value corresponded to a Tmax of 60 minutes, and the second value was selected to correspond to a Tmax of a longer time period (e.g., 65 or 70 minutes), the third value may be selected to correspond to a Tmax of a shorter time period (e.g., 50 or 55 minutes).

[0233] Comparing the first effect and the second effect may include determining whether the first value or the second value brought the subject's 512 glucose level closer to a target setpoint and/or maintained the subject's 512 glucose level within a target range for a longer period of time. In some cases, comparing the first effect and the second effect may include determining whether the first value or the second value resulted in a more stable blood

glucose level for the subject 512 or less volatility in the blood glucose level of the subject 512. In some cases, comparing the first effect and the second effect may include determining whether the first value or the second value resulted in more and/or greater excursions of the subject's 512 blood glucose level from a target blood glucose range.

[0234] Comparison of the first effect and the second effect may be performed in real-time or substantially in real-time accounting for the processing speed of the hardware processor 530 or the glucose level control system 510. Thus, in some cases, the comparison of the first effect and the second effect may be performed upon determination of the second effect.

[0235] In some embodiments, the comparison of the first effect and the second effect may include a statistical comparison or statistical analysis of the first effect and the second effect. The statistical comparison may involve performing regression analysis of at least the first effect and the second effect. In some cases, the comparison of the first and second effects may include determining whether the second therapy produced a statistically significant improvement in therapy (e.g., glycemic control) compared to the first therapy. A statistically significant improvement may vary depending on the subject or the condition of the subject. The comparison can also include a determination of whether there was a statistically significant increase in risk factors (e.g., hypoglycemia) during the second therapy period compared to the first therapy period.

[0236] In some cases, the value that better manages the subject's 512 blood glucose may be output to a user (e.g., the subject or a parent). The user may then configure the glucose level control system 510 based on the selected control parameter value. Alternatively, or in addition, the glucose level control system 510 may automatically modify the value of the control parameter. In some cases, the user may be provided with an opportunity to confirm the modification. In other cases, the modification may occur automatically without confirmation. However, the modification may be presented to the user (e.g., the subject or a healthcare provider) and/or logged in a therapy log.

[0237] In some cases, the comparison is performed by another computing system that is in communication with the glucose level control system 510. For example, the glucose level control system 510 may transmit the glucose level signal or data determined from the glucose level signal indicative of the effect of the blood glucose control to another computing system, such as a local computing system, a smartphone, or a cloud-based computing system.

Further, the glucose level control system 510 may transmit data associated with the control parameters values and the administering of medicament to the subject 512 to the computing system. The computing system may determine the value of the control parameter that better manages the subject's 512 blood glucose level. The computing system may configure the glucose level control system 510 with the selected value. Alternatively, or in addition, the selected value may be output to a user who can configure the glucose level control system 510 with the selected value.

[0238] At block 1318, the glucose level control system 510 provides therapy to the subject 512 based on the selected value for the control parameter that is selected at the block 1316. The therapy provided at the block 1318 may be provided during a third therapy period that is at some point after the first and second therapy periods. Thus, during the first two time periods, the first and second values may be used, respectively, for the control parameter to determine the value that results in the better outcome or improved care for the subject 512. During subsequent time periods, the value that resulted in the better outcome for the subject 512 may be used to provide future care for the subject 512. Alternatively, a new value that is neither the first or second value may be used to provide subsequent care in an attempt to find a value for the control parameter that may provide a better or improved level of care (e.g., closer to a desired target glucose level for a longer period of time) for the subject 512.

[0239] Providing therapy to the subject 512 based on the selected value may include configuring the glucose level control system 510 to provide therapy to the subject 512 during a third therapy period based at least in part on the active control parameter value. In some cases, configuring the glucose level control system 510 to provide therapy to the subject 512 based at least in part on the active control parameter value may end the process 1300. In other cases, the process 1300 may be repeated. Repeating the process 1300 may include using the selected value (e.g., the first or second value from a prior iteration of the process 1300) as the first value when performing the operations associated with the block 1304. The second value generated at the block 1308 may be a new value not used during the prior iteration of the process 1300.

[0240] The process 1300 may be repeated until a difference between the first effect and the second effect is less than a threshold difference. Alternatively, or in addition, the process 1300 may be repeated a particular number of iterations, periodically, in response to a

command, or in response to determining that the subject's 512 blood glucose does not satisfy a particular threshold for a particular amount of time.

[0241] As described, the process 1300 may be used to modify one or more control parameters that affect the delivery of insulin. However, the process 1300 is not limited as such and may be used to modify one or more control parameters that affect the delivery of other medicaments, such as counter-regulatory agent (e.g., glucagon). In some cases, the process 1300 may be used to recommend a change in insulin and/or counter-regulatory agent delivery without modifying the delivery. This can be advantageous for generating recommendations regarding counter-regulatory agent in a non-bi-hormonal glucose level control system 510 that does not support counter-regulatory agent, or that supports the use of counter-regulatory agent, but does not have the counter-regulatory agent available.

[0242] Moreover, in cases where the process 1300 is used to modify multiple control parameters, the at least two or more of the control parameters may be related to each other. For example, if the control parameters include the time constants α_1 and α_2, there may be a relationship between α_1 and α_2 such that modifying α_1 may cause a modification to α_2. For instance, α_2 may equal 1.5 times α_1.

[0243] The value for the control parameter set as the active parameter (e.g., the first value or the second value) at the block 1316 may be used by the control algorithm to provide therapy to the subject 512 for a particular period of time or until the process 1300 is repeated. As previously explained, in some cases, the process 1300 is repeated periodically and/or in response to a trigger, such as a blood glucose value or an average blood glucose value over a time period, or an indicate of a site change for the connection of the glucose level control system 510 to the subject 512.

Example Case Study

[0244] As previously described, the peak time of absorption of insulin may be referred to as Tmax. Different types of insulin may result in different amounts of time until peak absorption into the subject's blood or for different subjects. For example, in one example case study, the aggregate Tmax among subjects for the fast-acting insulin Humalog and Novolog was determined to be approximately 65 minutes, while the aggregate Tmax among subjects for the ultra-fast acting insulin Fiasp, which shares an active ingredient with Novolog,

but has a different formulation to decrease time to peak absorption, was determined to have a Tmax of approximately 40 minutes. However, when using an automated blood glucose level control system (such as the glucose level control system 510) with a control parameter corresponding to Tmax set to 65 minutes, there was statistically no improvement in the average glucose level or the frequency of hypoglycemia when using the fast-acting or ultra-fast acting insulin.

[0245] However, when adjusting the value of the control parameter for the automated blood glucose level control system to use different Tmax settings, one case study showed that mean glucose dropped when Tmax was lowered when using the ultra-fast acting insulin Fiasp. In the case study, three cohorts of 8 people each were used to test the effect of modifying Tmax when using a blood glucose control system with Fiasp as the medicament. The first cohort used a blood glucose level control system configured with a Tmax of 65 minutes for a week and then Tmax of 50 minutes for a week. The second cohort compared a Tmax of 65 minutes for the first week to a Tmax of 40 minutes for the second week. The third cohort compared a Tmax of 65 minutes for a week to a Tmax of 30 minutes for a week. Comparison of thechangin Tmax within each cohort and across cohorts demonstrated that the mean glucose level dropped when Tmax was lowered, and that there was no statistically significant increase or decline in hypoglycemia on average.

[0246] However, when Tmax is shorter than physiological insulin absorption, there is an increased risk of hypoglycemia because the blood glucose level control system may stack or administer multiple doses of insulin within a time period. This may occur because the blood glucose level control system may incorrectly identify a lower blood glucose concentration as a maximum blood glucose level concentration when Tmax is set below the actual peak insulin absorption time.

[0247] By using the process 1300 combined with the use of autoregression to compare the effect of different Tmax settings, it is possible to optimize the Tmax setting for a subject and/or a particular type of insulin. Autoregression may be performed by comparing the mean glucose level for s subject and determining whether there is a significant difference in mean glucose level during a later period using a different Tmax value compared to an earlier evaluation period. If the subsequent or newer value used for Tmax results in an improved effect, a control parameter of the blood glucose level control system 510 corresponding to

Tmax may be set to the newer value. After collecting glucose signals of the subject 512 for a period of time at a default or prior value for Tmax, the value for Tmax may be lowered by a significant amount from the initial Tmax (e.g., by a 10 minute reduction). The autoregression process may include capturing blood glucose data from the subject associated with a prior time. The system can perform a real-time regression analysis between the prior data set with the higher Tmax data set the current data set with the lower Tmax data. If the controller of the blood glucose level control system determines that there is a statistically significant improvement (e.g., more than a threshold improvement) in the mean glucose level for the subject with little or no increase in hypoglycemia events or risk events, the system can adopt or recommend the lower Tmax value as the preferred Tmax. This process can be repeated using additional reductions in Tmax. In some cases, each reduction in Tmax may be smaller than the previous reduction. Moreover, if it is determined that there is a not an improvement in the mean glucose level for the subject and/or if there is an increase in hypoglycemia or hypoglycemia risk events, the system may use the prior Tmax or may select a Tmax between the new Tmax and the prior Tmax. Thus, using the process 1300, the system can iteratively modify Tmax to find an optimal value for the subject and/or the selected insulin type. Moreover, by performing the autoregression process in real-time, maintenance of the subject's diabetes can be improved faster and more accurately compared to delayed analysis that may occur during clinical testing. Clinical testing may be less accurate as physiological changes in the subject may not be captured in real time.

[0248] In some cases, the real-time autoregression process described above can be used to analyze other types of biomedical data obtained by one or more sensors of a medical device. Further, the autoregression analysis may be used to make additional recommendations to the subject. For example, if it is determined that the actual Tmax for a particular insulin is higher than expected for the subject, it may be recommended that the subject modify his or her diet in a particular manner.

[0249] Further, as explained above, the autoregression may be based on glucose level measurements of the subject, which can be obtained from a CGM. However, the present disclosure is not limited as such. In some cases, the autoregression may be performed on additional biomedical data, such as data received from a smartwatch (e.g., blood pressure, heart rate), from a weight sensor, or any other type of biomedical sensor. By adapting the process

1300 to perform autoregression of other data, it is possible to perform a quantitatively objective analysis of biometric data, which can be used by a healthcare provider to care for a subject.

Example Simulations

[0250] Embodiments of an automated glucose level control system 510 that can be adapted for use with embodiments of the present disclosure are described in International Publication No. WO 2015/116524, published on August 6, 2015; U.S. Patent No. 9,833,570, issued on December 5, 2017; and U.S. Patent No. 7,806,854, issued on October 5, 2010, the disclosures of each of which are hereby incorporated by reference in their entirety for all purposes.

[0251] The automated glucose level control system 510 can autonomously administer insulin doses and account for online accumulation of insulin doses ("insulin on board") due to the finite rate of utilization of the insulin. The time course of activity, and in turn accumulation, of insulin doses may be modeled by the bi-exponential pharmacokinetic (PK) model represented by equation 2 with preset time constants. Of significant clinical significance in relation to the PK model is the time it takes for an insulin dose (e.g., administered subcutaneously) to peak in presence or effect in blood. The peak time is referred to as Tmax. In effect, setting the PK model time constants may be used to set Tmax that is inherently assumed by the model; conversely, setting Tmax may set the time constants of the PK model. Since the values of the time constants may be used to determine the online calculation of the accumulation of insulin by a control system, the value of the time constants may consequently control the control system's insulin dosing response to a given glucose excursion. Thus, varying Tmax (hence time constants) can be viewed as a setting knob that control's the magnitude (e.g., aggressive or conservative) of the control system's insulin doses online.

[0252] In certain embodiments, the control system implements a method to adapt the control system's PK model's Tmax (hence time constants) setting online. This method may be performed either by the control system periodically making online assessments and calculations that produce recommendations of modifications in Tmax or by the control system autonomously modulating Tmax online. In either case, the calculations may be based on the control system's performance over some time horizon or time period. Adaptations to Tmax

online, whether autonomously occurring or issued as recommendations can be based on the glucose-control performance by the control system over some time interval, including trends in glucose level, mean glucose level, or extent and/or duration of low glucose level (hypoglycemia) and/or high glucose level (hyperglycemia) occurrence. Alternatively, the calculation can be based on the usage of a counter-regulatory agent, the otherwise intended usage of a counter-regulatory agent had it been available (e.g., in insulin-only systems or in cases where the counter-regulatory agent or its delivery channel are temporarily unavailable). The method can impose upper and/or lower (static or dynamic) bounds for the range over which the Tmax can vary. The degree of adaptation in Tmax for a given situation can be different depending, for example, on the specific insulin being administered by the control system.

[0253] The described method may apply equally whether the continuous glucose monitor (which can provide the input glucose signal to the control system) is online or offline. For example, the method disclosed herein can be applied to system described in International Publication No. WO 2015/116524. Further, the described method can coexist with other aspects of the system being activated or not, such as, but not limited to, having a glucose target that is adapted automatically by the system, e.g., as in the system described in International Publication No. WO 2017/027459, published on February 16, 2017, which is hereby incorporated by reference herein for all purposes.

[0254] As previously described, the absorption of subcutaneously administered insulin into blood may be governed by the bi-exponential PK model of equation 2. Setting the time constants in the PK model may set a measure of the pending effect of the accumulated amount of insulin in the subcutaneously administered dose, as that can be taken to be the difference between the total area ($\int_0^\infty p(t)dt$, which can describe a measure of the total action over time due to a dose U_0) and $\int_0^t p(t)dt$, which can represent a measure of the expended portion of U_0. The peak time, Tmax, of the absorption of insulin doses into blood may be given by equation 3. Thus setting Tmax may set the PK model time constants, which can directly govern the magnitude (e.g., aggressive or conservative) of the control system's online insulin dosing response to a given glucose profile. Although not limited as such, for simplicity, assume that α_1 and α_2 are related, e.g. $\alpha_2 = 1.5\ \alpha_1$.

[0255] Figures 14A-14C illustrate a simulation demonstrating an effect that increasing or decreasing the Tmax setting, or value for a control parameter corresponding to Tmax, may have on the glucose level control system's 510 online insulin dosing response to a given glucose profile.

[0256] Figure 14A illustrates a simulation of blood glucose control of a subject with Tmax set to 65 minutes. The graph 1402A illustrates the blood glucose level of a subject over 24 hours. The range 1404 indicates the desired target setpoint range (e.g., between 70 and 120 mg/dL) for the subject's blood glucose level. Further, the range 1406 indicates the range in glucose level (e.g., below 60 mg/dL) for the subject that is associated with hypoglycemia or a risk of hypoglycemia. The graph 1410B illustrates the administering of medicament (insulin or glucagon) to the subject over the same 24 hour time period as graph 1402A based at least in part on the blood glucose level illustrated in the graph 1402A.

[0257] Figure 14B illustrates a simulation of blood glucose control of a subject with Tmax set to 15 minutes. The graph 1410B corresponds to the graph 1410A, but with Tmax set to 15 minutes instead of 65 minutes. As illustrated by comparing the graph 1410B to 1410A, reducing Tmax to 15 minutes may result in an increase in insulin dosing.

[0258] Figure 14C illustrates a simulation of blood glucose control of a subject with Tmax set to 130 minutes. The graph and 1410C corresponds to the graph 1410A, but with Tmax set to 130 minutes instead of 65 minutes. As illustrated by comparing the graph 1410C to 1410A, increasing Tmax to 130 minutes may result in a decrease in insulin dosing. Increasing or decreasing insulin (or counter-regulatory agent) dosing may affect care of the subject 512 and may affect whether the symptoms (e.g., dizziness, nausea, etc.) the subject experiences attributable to maintenance of the subject's diabetes.

[0259] The simulations illustrated in Figures 14A-14C illustrate one non-limiting example of modifying a control parameter. In some cases, different dosing may subsequently lead to different CGM excursions which in turn may vary the insulin–glucagon doses subsequently. Nonetheless, these simulations demonstrate the power of Tmax as a setting in determining the dosing by the glucose level control system 510.

[0260] In some implementations, the value of Tmax can be varied automatically online based on glycemic control in a receding time window. For example, Tmax can be described using the following formula: $T_{max}(k) = T_{max}^{o} + f(y_k, g_k)$, where T_{max}^{o} is a baseline

value, $f(y_k, g_k)$ is a function based on glycemic control of the glucose signal, y_k, and/or the amount of counter-regulatory dosing, g_k, that was computed by the control system (whether delivered or not). Evaluation of $f(y_k, g_k)$ could be over a time horizon N (e.g., a week). For example, $f(y_k, g_k) = \sum_{k-N}^{k} f(y_n, g_n)$. The function $f(y_k, g_k)$ can cause an increase in $T_{max}(k)$ relative to T_{max}^{o} for an increase in hypoglycemia (in severity as well as duration) or impending hypoglycemia in y_k over N and, conversely, can cause a decrease in $T_{max}(k)$ relative to T_{max}^{o} for an increase in hyperglycemia (in severity as well as duration) iny_k over N. Moreover, $f(y_k, g_k)$ can cause an increase or decrease in $T_{max}(k)$ relative to T_{max}^{o} respectively for an increase or decrease in g_k over N. The adjustment $f(y_k, g_k)$ to $T_{max}(k)$ can be evaluated and effected at discrete times, which can be at pre-specified regular intervals (e.g., once every 24 hours, once every three days, once a week, etc.). Alternatively, or in addition, adjustments can be evaluated and effected online when some metric satisfies a threshold or meets certain criteria within the current computation window (e.g., a week, a month, etc.). This criteria can include when hypoglycemia in y_k reaches or crosses a certain threshold or the level of counter-regulatory dosing in g_k reaches or crosses a certain threshold. Alternatively, or in addition, the adjustment can be effected after some evaluation related to the glucose signal y_k (e.g., mean value) in the current computation window has attained a statistically significant difference from its evaluation in a preceding computation window (e.g., the week before). These described implementations allow for having dynamic instances that are mathematically determined online as to when $T_{max}(k)$ gets adjusted and/or the magnitude by which it is adjusted.

Example Embodiments

[0261] Embodiments of the present disclosure can be described in view of the following clauses:

Clause 1. A computer-implemented method of generating an indication of total carbohydrate therapy over a period in a subject using a medicament pump configured to deliver at least insulin therapy to the subject, the method comprising:

by a hardware processor configured to generate dose control signals for the medicament pump configured to deliver at least insulin therapy to the subject,

receiving a glucose level of the subject;

determining based at least in part on the glucose level that a triggering event for raising blood glucose level of the subject has occurred, wherein the triggering event comprises an impending risk of hypoglycemia is present in the subject or that an episode of hypoglycemia is present in the subject;

determining an amount of a counter-regulatory agent to respond to the impending risk of hypoglycemia or the episode of hypoglycemia;

determining a dose of carbohydrate therapy based at least in part on the amount of the counter-regulatory agent;

tracking, over a period comprising a plurality of hypoglycemia risk events or hypoglycemia episodes, determined doses of carbohydrate therapy to generate the indication of total carbohydrate therapy over the period; and

outputting the indication of total carbohydrate therapy.

Clause 2. The computer-implemented method of clause 1, further comprising providing the amount of the counter-regulatory agent to the subject responsive to the impending risk of hypoglycemia or the episode of hypoglycemia.

Clause 3. The computer-implemented method of clause 1, further comprising providing the amount of the counter-regulatory agent to the subject responsive to the glucose level satisfying or falling below a threshold glucose level.

Clause 4. The computer-implemented method of clause 3, wherein the threshold glucose level is set based on a risk tolerance of the subject to a hypoglycemic event.

Clause 5. The computer-implemented method of clause 1, wherein the indication of total carbohydrate therapy corresponds to a reduction in carbohydrates consumed by the subject.

Clause 6. The computer-implemented method of clause 1, wherein the indication of total carbohydrate therapy corresponds to a reduction in carbohydrates achievable by an availability of the counter-regulatory agent.

Clause 7. The computer-implemented method of clause 1, wherein the indication of total carbohydrate therapy corresponds to an amount of counter-regulatory agent provided to the subject as a substitute for carbohydrates.

Clause 8. The computer-implemented method of clause 1, wherein the indication of total carbohydrate therapy comprises an indication of a range of carbohydrates.

Clause 9. The computer-implemented method of clause 1, wherein determining the dose of carbohydrate therapy comprises:

accessing a mapping between the counter-regulatory agent and carbohydrates; and

determining the dose of carbohydrate therapy based at least in part on the mapping and the amount of the counter-regulatory agent.

Clause 10. The computer-implemented method of clause 9, wherein the mapping is based at least in part on a type of the carbohydrates.

Clause 11. The computer-implemented method of clause 9, wherein the mapping is generated based on a clinical comparison of the counter-regulatory agent to the carbohydrates.

Clause 12. The computer-implemented method of clause 9, wherein the mapping is based at least in part on a physiological characteristic of the subject.

Clause 13. The computer-implemented method of clause 9, wherein the mapping is based at least in part on a type of the counter-regulatory agent.

Clause 14. The computer-implemented method of clause 9, wherein the mapping comprises a formula that relates the counter-regulatory agent to the carbohydrates.

Clause 15. The computer-implemented method of clause 9, wherein the mapping comprises a first mapping when the medicament pump comprises a bi-hormonal pump configured to deliver counter-regulatory agent therapy to the subject, and wherein the mapping comprises a second mapping when the medicament pump is not configured to deliver the counter-regulatory agent therapy to the subject.

Clause 16. The computer-implemented method of clause 1, wherein the indication of total carbohydrate therapy comprises one or more of an indication of calories, an indication of carbohydrates, an indication of a measure of sugar, an indication of a quantity of food, or an indication of weight of the subject attributable to the carbohydrate therapy.

Clause 17. An automated blood glucose control system configured to generate an indication of total carbohydrate therapy over a period in a subject, the automated blood glucose control system comprising:

a medicament delivery interface configured to operatively connect to a medicament pump configured to infuse medicament into the subject, wherein the medicament comprises at least insulin;

a memory configured to store specific computer-executable instructions; and

a hardware processor in communication with the memory and configured to execute the specific computer-executable instructions to at least:

receive a glucose level of the subject;

determine based at least in part on the glucose level that a triggering event for raising blood glucose level of the subject has occurred, wherein the triggering event comprises that an impending risk of hypoglycemia is present in the subject or that an episode of hypoglycemia is present in the subject;

determine an amount of a counter-regulatory agent to respond to the impending risk of hypoglycemia or the episode of hypoglycemia;

determine a dose of carbohydrate therapy based at least in part on the amount of the counter-regulatory agent;

track, over a period comprising a plurality of hypoglycemia risk events or hypoglycemia episodes, determined doses of carbohydrate therapy to generate the indication of total carbohydrate therapy over the period; and

output the indication of total carbohydrate therapy.

Clause 18. The automated blood glucose control system of clause 17, wherein the hardware processor is further configured to operate a control algorithm for automatic generation of a counter-regulatory agent dosing signal configured to operate the medicament pump to control blood glucose level in the subject based at least in part on a glucose level signal received from a glucose level sensor operatively connected to the subject indicating that the glucose level does not satisfy a threshold corresponding to the triggering event.

Clause 19. The automated blood glucose control system of clause 17, wherein the memory is further configured to store a mapping between the counter-regulatory agent and the carbohydrates, and wherein the hardware processor is further configured to:

access the mapping from the memory; and

determine the dose of carbohydrate therapy based at least in part on the mapping and the amount of the counter-regulatory agent.

Clause 20. The automated blood glucose control system of clause 19, wherein the mapping comprises an algorithm that relates the counter-regulatory agent to the carbohydrates.

[0262] Additional embodiments of the present disclosure can be described in view of the following clauses:

Clause 21. An automated blood glucose control system configured to generate a backup therapy protocol comprising insulin therapy instructions derived from autonomously determined doses of insulin, the automated blood glucose control system comprising:

a medicament delivery interface configured to operatively connect to a medicament pump for infusing medicament into the subject;

a memory configured to store specific computer-executable instructions; and

a hardware processor in communication with the memory and configured to execute the specific computer-executable instructions to at least:

receive a glucose level signal from a sensor operatively configured to determine glucose levels in the subject;

generate a dose control signal using a control algorithm configured to autonomously determine doses of insulin to be infused into the subject for the purpose of controlling blood glucose of the subject based at least in part on the glucose level signal;

track insulin therapy administered to the subject over a tracking period comprising at least one day by the automated blood glucose control system, wherein tracking the insulin therapy comprises storing an indication of the autonomously determined doses of insulin delivered to the subject as basal insulin, correction boluses of insulin, or as mealtime boluses of insulin;

generate at least one of a backup injection therapy protocol or a backup pump therapy protocol comprising insulin therapy instructions based at least in part on the insulin therapy administered to the subject over the tracking period; and

output the at least one of the backup injection therapy protocol or the backup pump therapy protocol on a display enabling therapy to be maintained

at a rate determined by the automated blood glucose control system when the automated blood glucose control system is not providing therapy to the subject.

Clause 22. The automated blood glucose control system of clause 21, wherein the hardware processor is further configured to execute the specific computer-executable instructions to at least store the indication of the autonomously determined doses of insulin delivered to the subject in the memory.

Clause 23. The automated blood glucose control system of clause 21, wherein the hardware processor is further configured to execute the specific computer-executable instructions to at least:

establish a communication channel with an external computing system that is separate from the automated blood glucose control system; and

transmit the indication of the autonomously determined doses of insulin delivered to the subject to the external computing system.

Clause 24. The automated blood glucose control system of clause 23, wherein the external computing system is a computing system of a data center, and the hardware processor is further configured to execute the specific computer-executable instructions to at least control a radio capable of communicating with the external computing system over a wide area network.

Clause 25. The automated blood glucose control system of clause 21, wherein the hardware processor is further configured to generate the backup injection therapy protocol by at least determining a number of long acting insulin units based at least in part on an average total basal insulin provided to the subject per day over the tracking period.

Clause 26. The automated blood glucose control system of clause 21, wherein each day of the tracking period is divided into a plurality of sub-periods, and wherein the hardware processor is further configured to generate the backup pump therapy protocol by at least determining an hourly basal rate for each sub-period of the plurality of sub-periods.

Clause 27. The automated blood glucose control system of clause 21, wherein the hardware processor is further configured to generate the backup injection therapy protocol or the backup pump therapy protocol by at least determining an average correction bolus provided to the subject per day over the tracking period.

Clause 28. The automated blood glucose control system of clause 21, wherein the hardware processor is further configured to generate the backup injection therapy protocol or the backup pump therapy protocol by at least determining an average change in blood glucose at least partially attributable to a unit of insulin provided as a correction bolus to the subject during the tracking period.

Clause 29. The automated blood glucose control system of clause 21, wherein the hardware processor is further configured to generate the backup injection therapy protocol or the backup pump therapy protocol by at least determining, for each mealtime of a plurality of mealtimes per day, an average mealtime bolus of insulin provided to the subject over the tracking period.

Clause 30. The automated blood glucose control system of clause 21, wherein the hardware processor is further configured to execute the specific computer-executable instructions to at least:

track counter-regulatory agent therapy administered to the subject over the tracking period, wherein tracking the counter-regulatory agent therapy comprises storing an indication of autonomously determined doses of counter-regulatory agent delivered to the subject responsive to the glucose level signal; and

include, in at least one of the backup injection therapy protocol or the backup pump therapy protocol, an indication of total counter-regulatory agent and/or daily counter-regulatory agent provided to the subject over the tracking period.

Clause 31. The automated blood glucose control system of clause 21, wherein the control algorithm is further configured to autonomously determine doses of insulin to be infused into the subject for the purpose of controlling blood glucose of the subject based at least in part on the glucose level signal and a control parameter that is modifiable by user interaction with a control parameter selection interface element, and wherein the hardware processor is further configured to execute the specific computer-executable instructions to at least:

track user modifications to the control parameter over the tracking period, wherein tracking the user modifications comprises storing in a therapy log whether each of the user modifications comprises an increase or a decrease in the control

parameter from a stored control parameter value and a time during which each of the user modifications occurred; and

generate a report of user modifications to the control parameter, wherein the report comprises a measure of frequency of increases and decreases from the stored control parameter value, and wherein the report is included in at least one of the backup injection therapy protocol or the backup pump therapy protocol.

Clause 32. A computer-implemented method of generating a backup therapy protocol comprising insulin therapy instructions derived from autonomously determined doses of insulin determined by an automated blood glucose control system, the method comprising:

by a hardware processor of the automated blood glucose control system,

receiving a glucose level signal from a sensor operatively configured to determine glucose levels in the subject;

generating a dose control signal using a control algorithm configured to autonomously determine doses of insulin to be infused into the subject for the purpose of controlling blood glucose of the subject based at least in part on the glucose level signal;

tracking insulin therapy administered by the automated blood glucose control system to the subject over a tracking period comprising at least one day, wherein tracking the insulin therapy comprises storing an indication of the autonomously determined doses of insulin delivered to the subject;

generating at least one of a backup injection therapy protocol or a backup pump therapy protocol comprising insulin therapy instructions based at least in part on the insulin therapy administered to the subject over the tracking period; and

outputting the at least one of the backup injection therapy protocol or the backup pump therapy protocol on a display enabling therapy to be maintained at a rate determined by the automated blood glucose control system when the automated blood glucose control system is not providing therapy to the subject.

Clause 33. The computer implemented method of clause 32, wherein the autonomously determined doses of insulin comprise one or more of a basal insulin dose, a correction bolus of insulin, or a mealtime bolus of insulin.

Clause 34. An automated blood glucose control system configured to generate a report of therapy protocol modifications made by a user of the automated blood glucose control system, the automated blood glucose control system comprising:

a medicament delivery interface configured to operatively connect to a medicament pump for infusing medicament into a subject;

a memory configured to store specific computer-executable instructions, a stored control parameter value, and a therapy log; and

a hardware processor in communication with the memory and configured to execute the specific computer-executable instructions to at least:

receive a glucose level signal from a sensor operatively configured to determine glucose levels in the subject;

generate a dose control signal using a control algorithm configured to autonomously determine doses of insulin to be infused into the subject for the purpose of controlling blood glucose of the subject based at least in part on the glucose level signal and a control parameter that is modifiable by user interaction with a control parameter selection interface element;

track user modifications to the control parameter over a tracking period comprising at least one day, wherein tracking the user modifications comprises storing in the therapy log whether each of the user modifications comprises an increase or a decrease in the control parameter from the stored control parameter value and a time during which each of the user modifications occurred; and

generate a report of user modifications to the control parameter, wherein the report comprises a measure of frequency of increases and decreases from the stored control parameter value.

Clause 35. The automated blood glucose control system of clause 34, wherein the report further comprises a percentage of user modifications higher or lower than the stored control parameter value over the tracking period.

Clause 36. The automated blood glucose control system of clause 34, wherein the report further comprises a number of times that infusion of insulin is paused over the tracking period.

Clause 37. The automated blood glucose control system of clause 34, wherein the report further comprises a percentage of time the stored control parameter is not modified by a user over the tracking period

Clause 38. The automated blood glucose control system of clause 34, wherein the tracking period is divided into a plurality of sub-periods, and wherein the hardware processor is further configured to track user modifications to the control parameter for each sub-period of the tracking period, wherein the report comprises a measure of frequency of increases and decreases from the stored control parameter value for each sub-period of the tracking period.

Clause 39. The automated blood glucose control system of clause 38, wherein at least a first sub-period of the plurality of sub-periods is associated with a first value for the control parameter and at least a first sub-period of the plurality of sub-periods is associated with a second value for the control parameter, and wherein the hardware processor is further configured to track user modifications to the first value of the control parameter for the first sub-period and track user modifications to the second value of the control parameter for the second sub-period.

Clause 40. The automated blood glucose control system of clause 34, wherein the hardware processor is further configured to track user activity associated with the user modifications to the control parameter, and wherein the report of user modifications to the control parameter includes an identity of user activity occurring during user modification to the control parameter.

[0263] Additional embodiments of the present disclosure can be described in view of the following clauses:

Clause 41. A computer-implemented method of modifying therapy provided to a subject using a blood glucose control system, the method comprising:

by a hardware processor configured to generate a dose control signal for the blood glucose control system,

receiving a glucose level signal from a glucose level sensor operatively connected to the subject;

causing first therapy to be delivered by the blood glucose control system to a subject during a first therapy period, wherein the first therapy is delivered based at least in part on a first value of a control parameter used by a control algorithm to generate the dose control signal, wherein the control parameter is used by the control algorithm to account for accumulation of insulin in the subject, thereby controlling an insulin dosing response of the control algorithm to a blood glucose excursion in the subject as indicated by the glucose level signal;

determining a first effect corresponding at least in part to the first therapy, wherein determining the first effect comprises analyzing glycemic control of blood glucose in the subject as indicated by the glucose level signal;

autonomously generating a second value of the control parameter, wherein the autonomously generated second value is determined as a function based on the first value and the first effect;

modifying the control parameter from the first value to the second value; and

causing second therapy to be delivered by the blood glucose control system to the subject during a second therapy period, wherein the second therapy is delivered based at least in part on the second value of the control parameter, wherein changing the control parameter modifies the therapy provided to the subject.

Clause 42. The computer-implemented method of clause 41, further comprising:

by the hardware processor,

determining a second effect corresponding at least in part to the second therapy;

selecting one of the first value of the control parameter or the second value of the control parameter as an active control parameter value based at least in part on a comparison of the first effect and the second effect; and

configuring the blood glucose control system to provide therapy to the subject during a third therapy period based at least in part on the active control parameter value, wherein the selection of the active control parameter value modifies the therapy provided to the subject.

Clause 43. The computer-implemented method of clause 41, wherein the control parameter used by the control algorithm relates to at least one time constant used in a calculation of an accumulation of insulin in the subject by the control algorithm.

Clause 44. The computer-implemented method of clause 41, wherein the control parameter used by the control algorithm corresponds to a rate of insulin diminishment in the subject.

Clause 45. The computer-implemented method of clause 41, wherein the first therapy period comprises a time period corresponding to the administering of multiple instances of therapy, and wherein the first therapy comprises the multiple instances of therapy.

Clause 46. The computer-implemented method of clause 41, wherein modifying the control parameter to the second value modifies one or more of a timing or a dosage size of insulin administered during the second therapy period.

Clause 47. The computer-implemented method of clause 41, wherein the first value of the control parameter is based on one or more of therapy delivered during a time period prior to the first therapy period, a clinical value, or a body mass of the subject.

Clause 48. The computer-implemented method of clause 41, wherein the control parameter used by the control algorithm corresponds to a time until insulin within blood plasma of the subject reaches a particular concentration level subsequent to administration of an insulin dose.

Clause 49. A computer-implemented method of modifying therapy provided to a subject using a blood glucose control system, the method comprising:

by a hardware processor configured to generate a dose control signal for the blood glucose control system,

causing first therapy to be delivered by the blood glucose control system to a subject during a first therapy period, wherein the first therapy is delivered based at least in part on a first value of a control parameter used by a control algorithm to generate the dose control signal;

determining a first effect corresponding at least in part to the first therapy, wherein determining the first effect comprises receiving a glucose level signal from a glucose level sensor operatively connected to the subject;

autonomously generating a second value of the control parameter based at least in part on a baseline value of the control parameter and an output of a function defined based on glycemic control of the subject, wherein the glucose level signal comprises an indication of the glycemic control of the subject during the first therapy period;

modifying the control parameter from the first value to the second value; and

causing second therapy to be delivered by the blood glucose control system to the subject during a second therapy period, wherein the second therapy is delivered based at least in part on the second value of the control parameter, wherein changing the control parameter modifies the therapy provided to the subject.

Clause 50. The computer-implemented method of clause 49, further comprising:

by the hardware processor,

determining a second effect corresponding at least in part to the second therapy;

selecting one of the first value of the control parameter or the second value of the control parameter as an active control parameter value based at least in part on a comparison of the first effect and the second effect; and

configuring the blood glucose control system to provide therapy to the subject during a third therapy period based at least in part on the active control parameter value, wherein the selection of the active control parameter value modifies the therapy provided to the subject.

Clause 51. The computer-implemented method of clause 49, wherein the first therapy comprises multiple instances of therapy administered over the first therapy period.

Clause 52. The computer-implemented method of clause 49, wherein the control parameter used by the control algorithm corresponds to a time until insulin within blood of the subject reaches a particular concentration level attributable to administration of an insulin dose.

Clause 53. A computer-implemented method of modifying therapy provided to a subject using a blood glucose control system, the method comprising:

by a hardware processor configured to generate a dose control signal for the blood glucose control system,

causing first therapy to be delivered by the blood glucose control system to a subject during a first therapy period, wherein the first therapy is delivered based at least in part on a first value of a control parameter used by a control algorithm to generate the dose control signal;

determining a first effect corresponding at least in part to the first therapy, wherein determining the first effect comprises receiving a glucose level signal from a glucose level sensor operatively connected to the subject;

autonomously generating a second value of the control parameter, wherein the autonomously generated second value is determined as a function based at least in part on a baseline value;

modifying the control parameter from the first value to the second value;

causing second therapy to be delivered by the blood glucose control system to the subject during a second therapy period, wherein the second therapy is delivered based at least in part on the second value of the control parameter, and wherein changing the control parameter modifies the therapy provided to the subject;

determining a second effect corresponding at least in part to the second therapy;

autonomously performing a comparison of the first effect and the second effect without action by a human;

selecting one of the first value of the control parameter or the second value of the control parameter as an active control parameter value based at least in part on the comparison of the first effect and the second effect; and

configuring the blood glucose control system to provide therapy to the subject during a third therapy period based at least in part on the active control parameter value, wherein the selection of the active control parameter value modifies the therapy provided to the subject.

Clause 54. The computer-implemented method of clause 53, wherein the second value of the control parameter is based at least in part on glycemic control indicated by the glucose level signal.

Clause 55. The computer-implemented method of clause 53, wherein the baseline value comprises the first value of the control parameter.

Clause 56. The computer-implemented method of clause 53, wherein the first value of the control parameter is determined based at least in part on the baseline value.

Clause 57. The computer-implemented method of clause 53, further comprising performing the comparison of the first effect and the second effect, wherein the comparison is performed substantially in real-time in response to determining the second effect.

Clause 58. The computer-implemented method of clause 53, further comprising performing the comparison of the first effect and the second effect, wherein the comparison of the first effect and the second effect comprises performing a statistical comparison of the first effect and the second effect.

Clause 59. The computer-implemented method of clause 53, further comprising performing the comparison of the first effect and the second effect, wherein the comparison of the first effect and the second effect comprises performing regression analysis of at least the first effect and the second effect.

Clause 60. The computer-implemented method of clause 53, wherein the second value of the control parameter may be selected based on performance of a regression analysis between a time of absorption of subcutaneously administered insulin into blood of the subject and a glycemic control function, wherein the glycemic control function is based at least in part on the glucose level signal.

Terminology

[0264] It is to be understood that not necessarily all objects or advantages may be achieved in accordance with any particular embodiment described herein. Thus, for example, those skilled in the art will recognize that certain embodiments may be configured to operate in a manner that achieves or optimizes one advantage or group of advantages as taught herein without necessarily achieving other objects or advantages as may be taught or suggested herein.

[0265] All of the processes described herein may be embodied in, and fully automated via, software code modules executed by a computing system that includes one or more computers or processors. The code modules may be stored in any type of non-transitory computer-readable medium or other computer storage device. Some or all the methods may be embodied in specialized computer hardware. Further, the computing system may include, be implemented as part of, or communicate with an automated blood glucose system, an ambulatory medicament system, or an ambulatory medical device.

[0266] Many other variations than those described herein will be apparent from this disclosure. For example, depending on the embodiment, certain acts, events, or functions of any of the algorithms described herein can be performed in a different sequence, can be added, merged, or left out altogether (for example, not all described acts or events are necessary for the practice of the algorithms). Moreover, in certain embodiments, acts or events can be performed concurrently, for example, through multi-threaded processing, interrupt processing, or multiple processors or processor cores or on other parallel architectures, rather than sequentially. In addition, different tasks or processes can be performed by different machines and/or computing systems that can function together.

[0267] The various illustrative logical blocks and modules described in connection with the embodiments disclosed herein can be implemented or performed by a machine, such as a processing unit or processor, a digital signal processor (DSP), an application specific integrated circuit (ASIC), a field programmable gate array (FPGA) or other programmable logic device, discrete gate or transistor logic, discrete hardware components, or any combination thereof designed to perform the functions described herein. A processor can be a microprocessor, but in the alternative, the processor can be a controller, microcontroller, or state machine, combinations of the same, or the like. A processor can include electrical circuitry configured to process computer-executable instructions. In another embodiment, a processor includes an FPGA or other programmable device that performs logic operations without processing computer-executable instructions. A processor can also be implemented as a combination of computing devices, for example, a combination of a DSP and a microprocessor, a plurality of microprocessors, one or more microprocessors in conjunction with a DSP core, or any other such configuration. Although described herein primarily with respect to digital technology, a processor may also include primarily analog components. A

computing environment can include any type of computer system, including, but not limited to, a computer system based on a microprocessor, a mainframe computer, a digital signal processor, a portable computing device, a device controller, or a computational engine within an appliance, to name a few.

[0268] Conditional language such as, among others, "can," "could," "might" or "may," unless specifically stated otherwise, are otherwise understood within the context as used in general to convey that certain embodiments include, while other embodiments do not include, certain features, elements and/or steps. Thus, such conditional language is not generally intended to imply that features, elements and/or steps are in any way required for one or more embodiments or that one or more embodiments necessarily include logic for deciding, with or without user input or prompting, whether these features, elements and/or steps are included or are to be performed in any particular embodiment.

[0269] Disjunctive language such as the phrase "at least one of X, Y, or Z," unless specifically stated otherwise, is otherwise understood with the context as used in general to present that an item, term, etc., may be either X, Y, or Z, or any combination thereof (for example, X, Y, and/or Z). Thus, such disjunctive language is not generally intended to, and should not, imply that certain embodiments require at least one of X, at least one of Y, or at least one of Z to each be present.

[0270] Any process descriptions, elements or blocks in the flow diagrams described herein and/or depicted in the attached figures should be understood as potentially representing modules, segments, or portions of code which include one or more executable instructions for implementing specific logical functions or elements in the process. Alternate implementations are included within the scope of the embodiments described herein in which elements or functions may be deleted, executed out of order from that shown, or discussed, including substantially concurrently or in reverse order, depending on the functionality involved as would be understood by those skilled in the art.

[0271] Unless otherwise explicitly stated, articles such as "a" or "an" should generally be interpreted to include one or more described items. Accordingly, phrases such as "a device configured to" are intended to include one or more recited devices. Such one or more recited devices can also be collectively configured to carry out the stated recitations. For example, "a processor configured to carry out recitations A, B and C" can include a first

processor configured to carry out recitation A working in conjunction with a second processor configured to carry out recitations B and C.

[0272] It should be emphasized that many variations and modifications may be made to the above-described embodiments, the elements of which are to be understood as being among other acceptable examples. All such modifications and variations are intended to be included herein within the scope of this disclosure.

WHAT IS CLAIMED IS:

1. A computer-implemented method of generating an indication of total carbohydrate therapy over a period in a subject using a medicament pump configured to deliver at least insulin therapy to the subject, the method comprising:

by a hardware processor configured to generate dose control signals for the medicament pump configured to deliver at least insulin therapy to the subject,

receiving a glucose level of the subject;

determining based at least in part on the glucose level that a triggering event for raising blood glucose level of the subject has occurred, wherein the triggering event comprises an impending risk of hypoglycemia is present in the subject or that an episode of hypoglycemia is present in the subject;

determining an amount of a counter-regulatory agent to respond to the impending risk of hypoglycemia or the episode of hypoglycemia;

determining a dose of carbohydrate therapy based at least in part on the amount of the counter-regulatory agent;

tracking, over a period comprising a plurality of hypoglycemia risk events or hypoglycemia episodes, determined doses of carbohydrate therapy to generate the indication of total carbohydrate therapy over the period; and

outputting the indication of total carbohydrate therapy.

2. The computer-implemented method of claim 1, further comprising providing the amount of the counter-regulatory agent to the subject responsive to the impending risk of hypoglycemia or the episode of hypoglycemia.

3. The computer-implemented method of claim 1, further comprising providing the amount of the counter-regulatory agent to the subject responsive to the glucose level satisfying or falling below a threshold glucose level.

4. The computer-implemented method of claim 3, wherein the threshold glucose level is set based on a risk tolerance of the subject to a hypoglycemic event.

5. The computer-implemented method of claim 1, wherein the indication of total carbohydrate therapy corresponds to a reduction in carbohydrates consumed by the subject.

6. The computer-implemented method of claim 1, wherein the indication of total carbohydrate therapy corresponds to a reduction in carbohydrates achievable by an availability of the counter-regulatory agent.

7. The computer-implemented method of claim 1, wherein the indication of total carbohydrate therapy corresponds to an amount of counter-regulatory agent provided to the subject as a substitute for carbohydrates.

8. The computer-implemented method of claim 1, wherein the indication of total carbohydrate therapy comprises an indication of a range of carbohydrates.

9. The computer-implemented method of claim 1, wherein determining the dose of carbohydrate therapy comprises:

accessing a mapping between the counter-regulatory agent and carbohydrates; and

determining the dose of carbohydrate therapy based at least in part on the mapping and the amount of the counter-regulatory agent.

10. The computer-implemented method of claim 9, wherein the mapping is based at least in part on a type of the carbohydrates.

11. The computer-implemented method of claim 9, wherein the mapping is generated based on a clinical comparison of the counter-regulatory agent to the carbohydrates.

12. The computer-implemented method of claim 9, wherein the mapping is based at least in part on a physiological characteristic of the subject.

13. The computer-implemented method of claim 9, wherein the mapping is based at least in part on a type of the counter-regulatory agent.

14. The computer-implemented method of claim 9, wherein the mapping comprises a formula that relates the counter-regulatory agent to the carbohydrates.

15. The computer-implemented method of claim 9, wherein the mapping comprises a first mapping when the medicament pump comprises a bi-hormonal pump configured to deliver counter-regulatory agent therapy to the subject, and wherein the mapping comprises a second mapping when the medicament pump is not configured to deliver the counter-regulatory agent therapy to the subject.

16. The computer-implemented method of claim 1, wherein the indication of total carbohydrate therapy comprises one or more of an indication of calories, an indication of

carbohydrates, an indication of a measure of sugar, an indication of a quantity of food, or an indication of weight of the subject attributable to the carbohydrate therapy.

17. An automated blood glucose control system configured to generate an indication of total carbohydrate therapy over a period in a subject, the automated blood glucose control system comprising:

a medicament delivery interface configured to operatively connect to a medicament pump configured to infuse medicament into the subject, wherein the medicament comprises at least insulin;

a memory configured to store specific computer-executable instructions; and

a hardware processor in communication with the memory and configured to execute the specific computer-executable instructions to at least:

receive a glucose level of the subject;

determine based at least in part on the glucose level that a triggering event for raising blood glucose level of the subject has occurred, wherein the triggering event comprises that an impending risk of hypoglycemia is present in the subject or that an episode of hypoglycemia is present in the subject;

determine an amount of a counter-regulatory agent to respond to the impending risk of hypoglycemia or the episode of hypoglycemia;

determine a dose of carbohydrate therapy based at least in part on the amount of the counter-regulatory agent;

track, over a period comprising a plurality of hypoglycemia risk events or hypoglycemia episodes, determined doses of carbohydrate therapy to generate the indication of total carbohydrate therapy over the period; and

output the indication of total carbohydrate therapy.

18. The automated blood glucose control system of claim 17, wherein the hardware processor is further configured to operate a control algorithm for automatic generation of a counter-regulatory agent dosing signal configured to operate the medicament pump to control blood glucose level in the subject based at least in part on a glucose level signal received from a glucose level sensor operatively connected to the subject indicating that the glucose level does not satisfy a threshold corresponding to the triggering event.

19. The automated blood glucose control system of claim 17, wherein the memory is further configured to store a mapping between the counter-regulatory agent and the carbohydrates, and wherein the hardware processor is further configured to:

access the mapping from the memory; and

determine the dose of carbohydrate therapy based at least in part on the mapping and the amount of the counter-regulatory agent.

20. The automated blood glucose control system of claim 19, wherein the mapping comprises an algorithm that relates the counter-regulatory agent to the carbohydrates.

21. An automated blood glucose control system configured to generate a backup therapy protocol comprising insulin therapy instructions derived from autonomously determined doses of insulin, the automated blood glucose control system comprising:

a medicament delivery interface configured to operatively connect to a medicament pump for infusing medicament into the subject;

a memory configured to store specific computer-executable instructions; and

a hardware processor in communication with the memory and configured to execute the specific computer-executable instructions to at least:

receive a glucose level signal from a sensor operatively configured to determine glucose levels in the subject;

generate a dose control signal using a control algorithm configured to autonomously determine doses of insulin to be infused into the subject for the purpose of controlling blood glucose of the subject based at least in part on the glucose level signal;

track insulin therapy administered to the subject over a tracking period comprising at least one day by the automated blood glucose control system, wherein tracking the insulin therapy comprises storing an indication of the autonomously determined doses of insulin delivered to the subject as basal insulin, correction boluses of insulin, or as mealtime boluses of insulin;

generate at least one of a backup injection therapy protocol or a backup pump therapy protocol comprising insulin therapy instructions based at least in part on the insulin therapy administered to the subject over the tracking period; and

output the at least one of the backup injection therapy protocol or the backup pump therapy protocol on a display enabling therapy to be maintained at a rate determined by the automated blood glucose control system when the automated blood glucose control system is not providing therapy to the subject.

22. The automated blood glucose control system of claim 21, wherein the hardware processor is further configured to execute the specific computer-executable instructions to at least store the indication of the autonomously determined doses of insulin delivered to the subject in the memory.

23. The automated blood glucose control system of claim 21, wherein the hardware processor is further configured to execute the specific computer-executable instructions to at least:

establish a communication channel with an external computing system that is separate from the automated blood glucose control system; and

transmit the indication of the autonomously determined doses of insulin delivered to the subject to the external computing system.

24. The automated blood glucose control system of claim 23, wherein the external computing system is a computing system of a data center, and the hardware processor is further configured to execute the specific computer-executable instructions to at least control a radio capable of communicating with the external computing system over a wide area network.

25. The automated blood glucose control system of claim 21, wherein the hardware processor is further configured to generate the backup injection therapy protocol by at least determining a number of long acting insulin units based at least in part on an average total basal insulin provided to the subject per day over the tracking period.

26. The automated blood glucose control system of claim 21, wherein each day of the tracking period is divided into a plurality of sub-periods, and wherein the hardware processor is further configured to generate the backup pump therapy protocol by at least determining an hourly basal rate for each sub-period of the plurality of sub-periods.

27. The automated blood glucose control system of claim 21, wherein the hardware processor is further configured to generate the backup injection therapy protocol or the backup pump therapy protocol by at least determining an average correction bolus provided to the subject per day over the tracking period.

28. The automated blood glucose control system of claim 21, wherein the hardware processor is further configured to generate the backup injection therapy protocol or the backup pump therapy protocol by at least determining an average change in blood glucose at least partially attributable to a unit of insulin provided as a correction bolus to the subject during the tracking period.

29. The automated blood glucose control system of claim 21, wherein the hardware processor is further configured to generate the backup injection therapy protocol or the backup pump therapy protocol by at least determining, for each mealtime of a plurality of mealtimes per day, an average mealtime bolus of insulin provided to the subject over the tracking period.

30. The automated blood glucose control system of claim 21, wherein the hardware processor is further configured to execute the specific computer-executable instructions to at least:

track counter-regulatory agent therapy administered to the subject over the tracking period, wherein tracking the counter-regulatory agent therapy comprises storing an indication of autonomously determined doses of counter-regulatory agent delivered to the subject responsive to the glucose level signal; and

include, in at least one of the backup injection therapy protocol or the backup pump therapy protocol, an indication of total counter-regulatory agent and/or daily counter-regulatory agent provided to the subject over the tracking period.

31. The automated blood glucose control system of claim 21, wherein the control algorithm is further configured to autonomously determine doses of insulin to be infused into the subject for the purpose of controlling blood glucose of the subject based at least in part on the glucose level signal and a control parameter that is modifiable by user interaction with a control parameter selection interface element, and wherein the hardware processor is further configured to execute the specific computer-executable instructions to at least:

track user modifications to the control parameter over the tracking period, wherein tracking the user modifications comprises storing in a therapy log whether each of the user modifications comprises an increase or a decrease in the control parameter from a stored control parameter value and a time during which each of the user modifications occurred; and

generate a report of user modifications to the control parameter, wherein the report comprises a measure of frequency of increases and decreases from the stored control parameter value, and wherein the report is included in at least one of the backup injection therapy protocol or the backup pump therapy protocol.

32. A computer-implemented method of generating a backup therapy protocol comprising insulin therapy instructions derived from autonomously determined doses of insulin determined by an automated blood glucose control system, the method comprising:

by a hardware processor of the automated blood glucose control system,

receiving a glucose level signal from a sensor operatively configured to determine glucose levels in the subject;

generating a dose control signal using a control algorithm configured to autonomously determine doses of insulin to be infused into the subject for the purpose of controlling blood glucose of the subject based at least in part on the glucose level signal;

tracking insulin therapy administered by the automated blood glucose control system to the subject over a tracking period comprising at least one day, wherein tracking the insulin therapy comprises storing an indication of the autonomously determined doses of insulin delivered to the subject;

generating at least one of a backup injection therapy protocol or a backup pump therapy protocol comprising insulin therapy instructions based at least in part on the insulin therapy administered to the subject over the tracking period; and

outputting the at least one of the backup injection therapy protocol or the backup pump therapy protocol on a display enabling therapy to be maintained at a rate determined by the automated blood glucose control system when the automated blood glucose control system is not providing therapy to the subject.

33. The computer implemented method of claim 32, wherein the autonomously determined doses of insulin comprise one or more of a basal insulin dose, a correction bolus of insulin, or a mealtime bolus of insulin.

34. An automated blood glucose control system configured to generate a report of therapy protocol modifications made by a user of the automated blood glucose control system, the automated blood glucose control system comprising:

a medicament delivery interface configured to operatively connect to a medicament pump for infusing medicament into a subject;

a memory configured to store specific computer-executable instructions, a stored control parameter value, and a therapy log; and

a hardware processor in communication with the memory and configured to execute the specific computer-executable instructions to at least:

receive a glucose level signal from a sensor operatively configured to determine glucose levels in the subject;

generate a dose control signal using a control algorithm configured to autonomously determine doses of insulin to be infused into the subject for the purpose of controlling blood glucose of the subject based at least in part on the glucose level signal and a control parameter that is modifiable by user interaction with a control parameter selection interface element;

track user modifications to the control parameter over a tracking period comprising at least one day, wherein tracking the user modifications comprises storing in the therapy log whether each of the user modifications comprises an increase or a decrease in the control parameter from the stored control parameter value and a time during which each of the user modifications occurred; and

generate a report of user modifications to the control parameter, wherein the report comprises a measure of frequency of increases and decreases from the stored control parameter value.

35. The automated blood glucose control system of claim 34, wherein the report further comprises a percentage of user modifications higher or lower than the stored control parameter value over the tracking period.

36. The automated blood glucose control system of claim 34, wherein the report further comprises a number of times that infusion of insulin is paused over the tracking period.

37. The automated blood glucose control system of claim 34, wherein the report further comprises a percentage of time the stored control parameter is not modified by a user over the tracking period

38. The automated blood glucose control system of claim 34, wherein the tracking period is divided into a plurality of sub-periods, and wherein the hardware processor is further configured to track user modifications to the control parameter for each sub-period of the tracking period, wherein the report comprises a measure of frequency of increases and decreases from the stored control parameter value for each sub-period of the tracking period.

39. The automated blood glucose control system of claim 38, wherein at least a first sub-period of the plurality of sub-periods is associated with a first value for the control parameter and at least a first sub-period of the plurality of sub-periods is associated with a second value for the control parameter, and wherein the hardware processor is further configured to track user modifications to the first value of the control parameter for the first sub-period and track user modifications to the second value of the control parameter for the second sub-period.

40. The automated blood glucose control system of claim 34, wherein the hardware processor is further configured to track user activity associated with the user modifications to the control parameter, and wherein the report of user modifications to the control parameter includes an identity of user activity occurring during user modification to the control parameter.

41. A computer-implemented method of modifying therapy provided to a subject using a blood glucose control system, the method comprising:

by a hardware processor configured to generate a dose control signal for the blood glucose control system,

receiving a glucose level signal from a glucose level sensor operatively connected to the subject;

causing first therapy to be delivered by the blood glucose control system to a subject during a first therapy period, wherein the first therapy is delivered based at least in part on a first value of a control parameter used by a control algorithm to generate the dose control signal, wherein the control parameter is used by the control algorithm to account for accumulation of insulin in the

subject, thereby controlling an insulin dosing response of the control algorithm to a blood glucose excursion in the subject as indicated by the glucose level signal;

determining a first effect corresponding at least in part to the first therapy, wherein determining the first effect comprises analyzing glycemic control of blood glucose in the subject as indicated by the glucose level signal;

autonomously generating a second value of the control parameter, wherein the autonomously generated second value is determined as a function based on the first value and the first effect;

modifying the control parameter from the first value to the second value; and

causing second therapy to be delivered by the blood glucose control system to the subject during a second therapy period, wherein the second therapy is delivered based at least in part on the second value of the control parameter, and wherein changing the control parameter modifies the therapy provided to the subject.

42. The computer-implemented method of claim 41, further comprising:

by the hardware processor,

determining a second effect corresponding at least in part to the second therapy;

selecting one of the first value of the control parameter or the second value of the control parameter as an active control parameter value based at least in part on a comparison of the first effect and the second effect; and

configuring the blood glucose control system to provide therapy to the subject during a third therapy period based at least in part on the active control parameter value, wherein the selection of the active control parameter value modifies the therapy provided to the subject.

43. The computer-implemented method of claim 41, wherein the control parameter used by the control algorithm relates to at least one time constant used in a calculation of an accumulation of insulin in the subject by the control algorithm.

44. The computer-implemented method of claim 41, wherein the control parameter used by the control algorithm corresponds to a rate of insulin diminishment in the subject.

45. The computer-implemented method of claim 41, wherein the first therapy period comprises a time period corresponding to the administering of multiple instances of therapy, and wherein the first therapy comprises the multiple instances of therapy.

46. The computer-implemented method of claim 41, wherein modifying the control parameter to the second value modifies one or more of a timing or a dosage size of insulin administered during the second therapy period.

47. The computer-implemented method of claim 41, wherein the first value of the control parameter is based on one or more of therapy delivered during a time period prior to the first therapy period, a clinical value, or a body mass of the subject.

48. The computer-implemented method of claim 41, wherein the control parameter used by the control algorithm corresponds to a time until insulin within blood plasma of the subject reaches a particular concentration level subsequent to administration of an insulin dose.

49. A computer-implemented method of modifying therapy provided to a subject using a blood glucose control system, the method comprising:

by a hardware processor configured to generate a dose control signal for the blood glucose control system,

causing first therapy to be delivered by the blood glucose control system to a subject during a first therapy period, wherein the first therapy is delivered based at least in part on a first value of a control parameter used by a control algorithm to generate the dose control signal;

determining a first effect corresponding at least in part to the first therapy, wherein determining the first effect comprises receiving a glucose level signal from a glucose level sensor operatively connected to the subject;

autonomously generating a second value of the control parameter based at least in part on a baseline value of the control parameter and an output of a function defined based on glycemic control of the subject, wherein the glucose level signal comprises an indication of the glycemic control of the subject during the first therapy period;

modifying the control parameter from the first value to the second value; and

causing second therapy to be delivered by the blood glucose control system to the subject during a second therapy period, wherein the second therapy is delivered based at least in part on the second value of the control parameter, and wherein changing the control parameter modifies the therapy provided to the subject.

50. The computer-implemented method of claim 49, further comprising:

by the hardware processor,

determining a second effect corresponding at least in part to the second therapy;

selecting one of the first value of the control parameter or the second value of the control parameter as an active control parameter value based at least in part on a comparison of the first effect and the second effect; and

configuring the blood glucose control system to provide therapy to the subject during a third therapy period based at least in part on the active control parameter value, wherein the selection of the active control parameter value modifies the therapy provided to the subject.

51. The computer-implemented method of claim 49, wherein the first therapy comprises multiple instances of therapy administered over the first therapy period.

52. The computer-implemented method of claim 49, wherein the control parameter used by the control algorithm corresponds to a time until insulin within blood of the subject reaches a particular concentration level attributable to administration of an insulin dose.

53. A computer-implemented method of modifying therapy provided to a subject using a blood glucose control system, the method comprising:

by a hardware processor configured to generate a dose control signal for the blood glucose control system,

causing first therapy to be delivered by the blood glucose control system to a subject during a first therapy period, wherein the first therapy is delivered based at least in part on a first value of a control parameter used by a control algorithm to generate the dose control signal;

determining a first effect corresponding at least in part to the first therapy, wherein determining the first effect comprises receiving a glucose level signal from a glucose level sensor operatively connected to the subject;

autonomously generating a second value of the control parameter, wherein the autonomously generated second value is determined as a function based at least in part on a baseline value;

modifying the control parameter from the first value to the second value;

causing second therapy to be delivered by the blood glucose control system to the subject during a second therapy period, wherein the second therapy is delivered based at least in part on the second value of the control parameter, and wherein changing the control parameter modifies the therapy provided to the subject;

determining a second effect corresponding at least in part to the second therapy;

autonomously performing a comparison of the first effect and the second effect without action by a human;

selecting one of the first value of the control parameter or the second value of the control parameter as an active control parameter value based at least in part on the comparison of the first effect and the second effect; and

configuring the blood glucose control system to provide therapy to the subject during a third therapy period based at least in part on the active control parameter value, wherein the selection of the active control parameter value modifies the therapy provided to the subject.

54. The computer-implemented method of claim 53, wherein the second value of the control parameter is based at least in part on glycemic control indicated by the glucose level signal.

55. The computer-implemented method of claim 53, wherein the baseline value comprises the first value of the control parameter.

56. The computer-implemented method of claim 53, wherein the first value of the control parameter is determined based at least in part on the baseline value.

57. The computer-implemented method of claim 53, further comprising performing the comparison of the first effect and the second effect, wherein the comparison is performed substantially in real-time in response to determining the second effect.

58. The computer-implemented method of claim 53, further comprising performing the comparison of the first effect and the second effect, wherein the comparison of the first effect and the second effect comprises performing a statistical comparison of the first effect and the second effect.

59. The computer-implemented method of claim 53, further comprising performing the comparison of the first effect and the second effect, wherein the comparison of the first effect and the second effect comprises performing regression analysis of at least the first effect and the second effect.

60. The computer-implemented method of claim 53, wherein the second value of the control parameter may be selected based on performance of a regression analysis between a time of absorption of subcutaneously administered insulin into blood of the subject and a glycemic control function, wherein the glycemic control function is based at least in part on the glucose level signal.

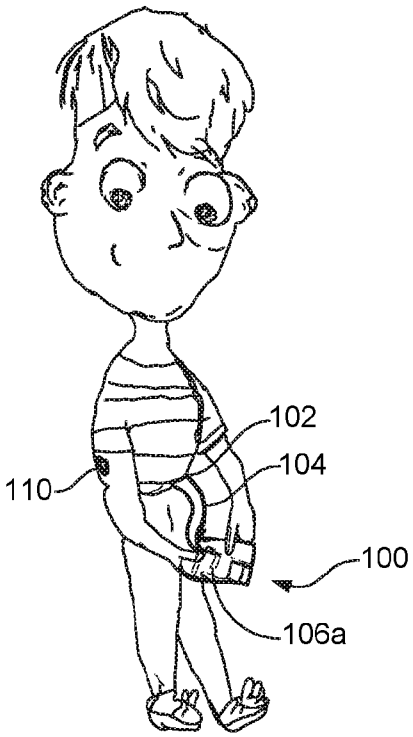

FIG. 1A

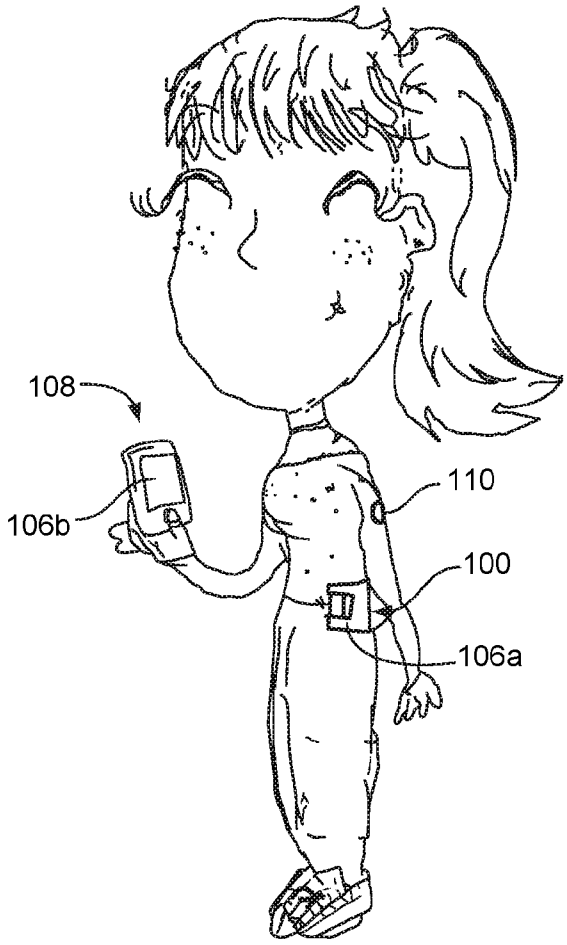

FIG. 1B

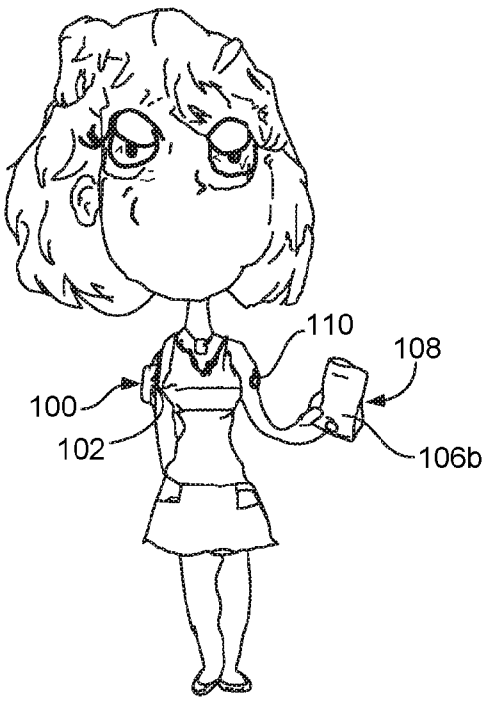

FIG. 1C

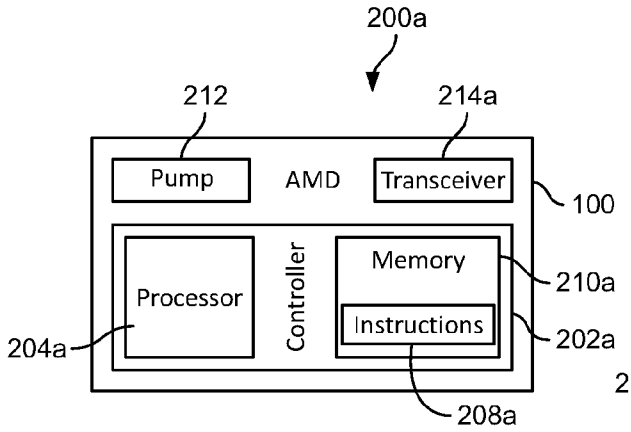

FIG. 2A

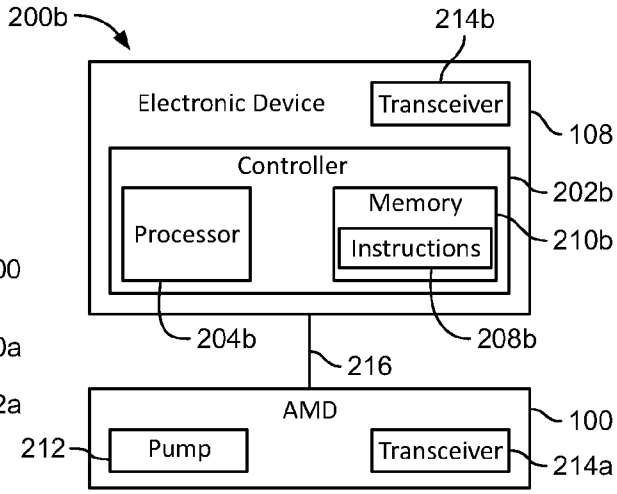

FIG. 2B

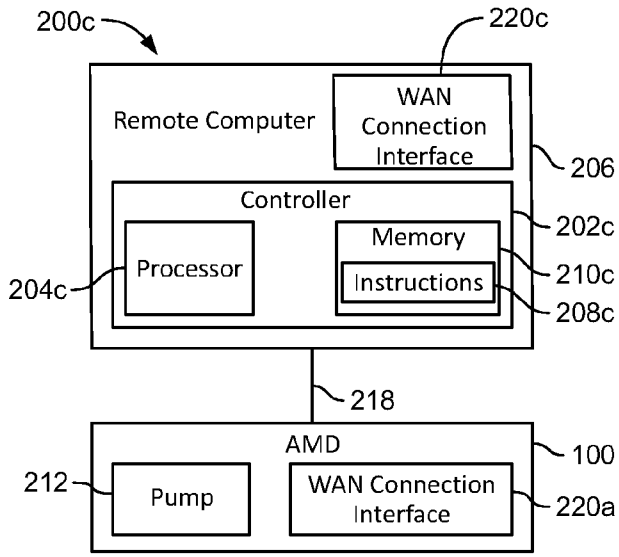

FIG. 2C

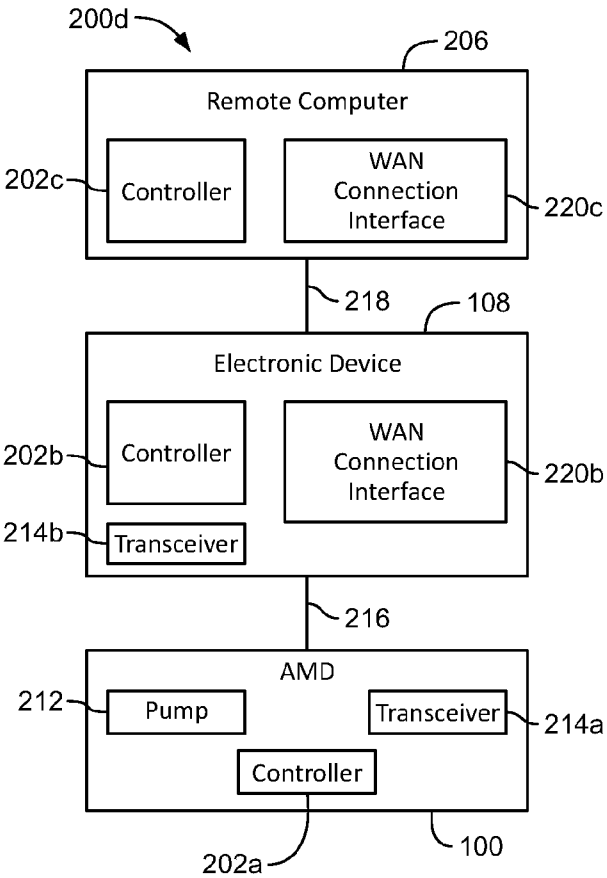

FIG. 2D

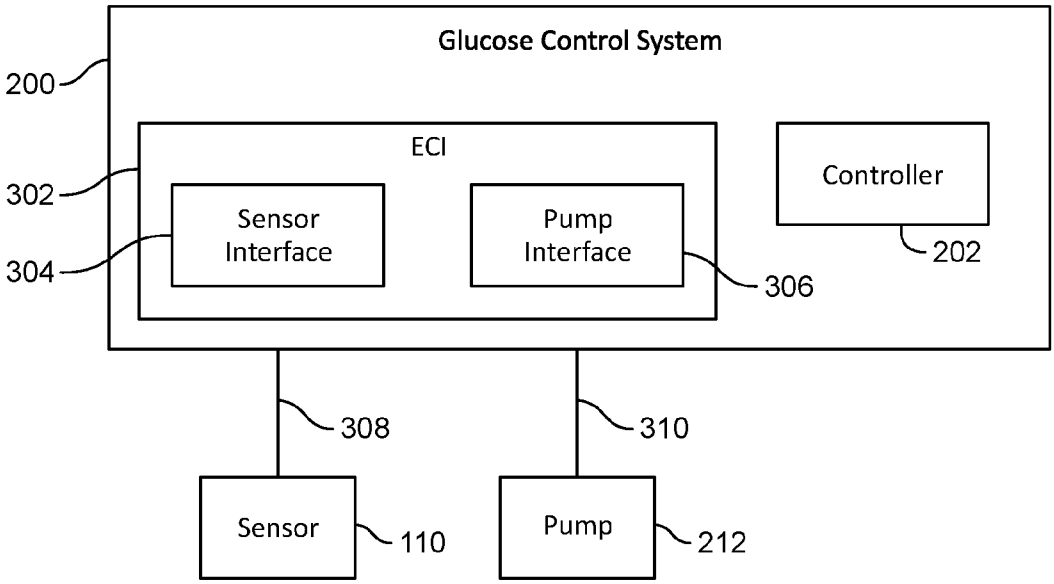
Glucose Control System
200
ECI
302
304
Sensor Interface
Pump Interface
306
Controller
202
308
310
Sensor
110
Pump
212

FIG. 3

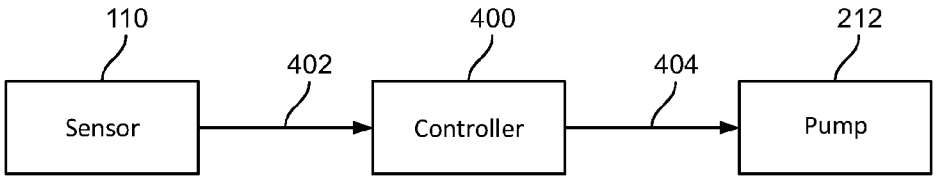
110
400
212
402
404
Sensor
Controller
Pump

FIG. 4A

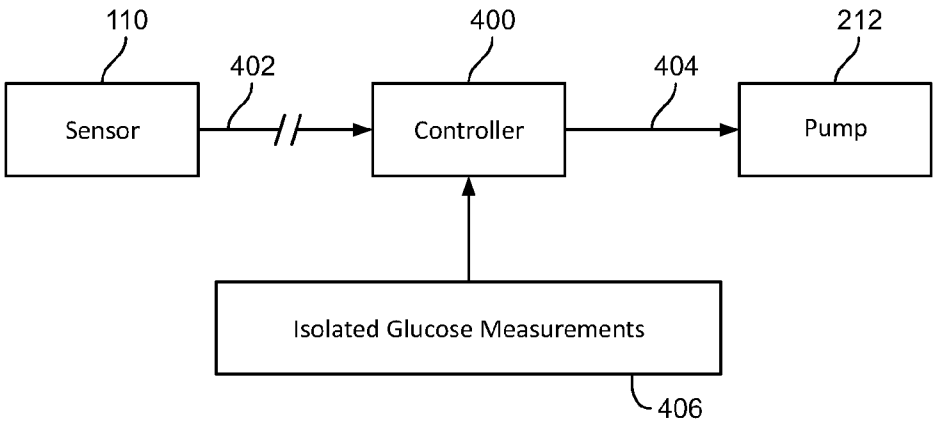
110
400
212
402
404
Sensor
Controller
Pump
Isolated Glucose Measurements
406

FIG. 4B

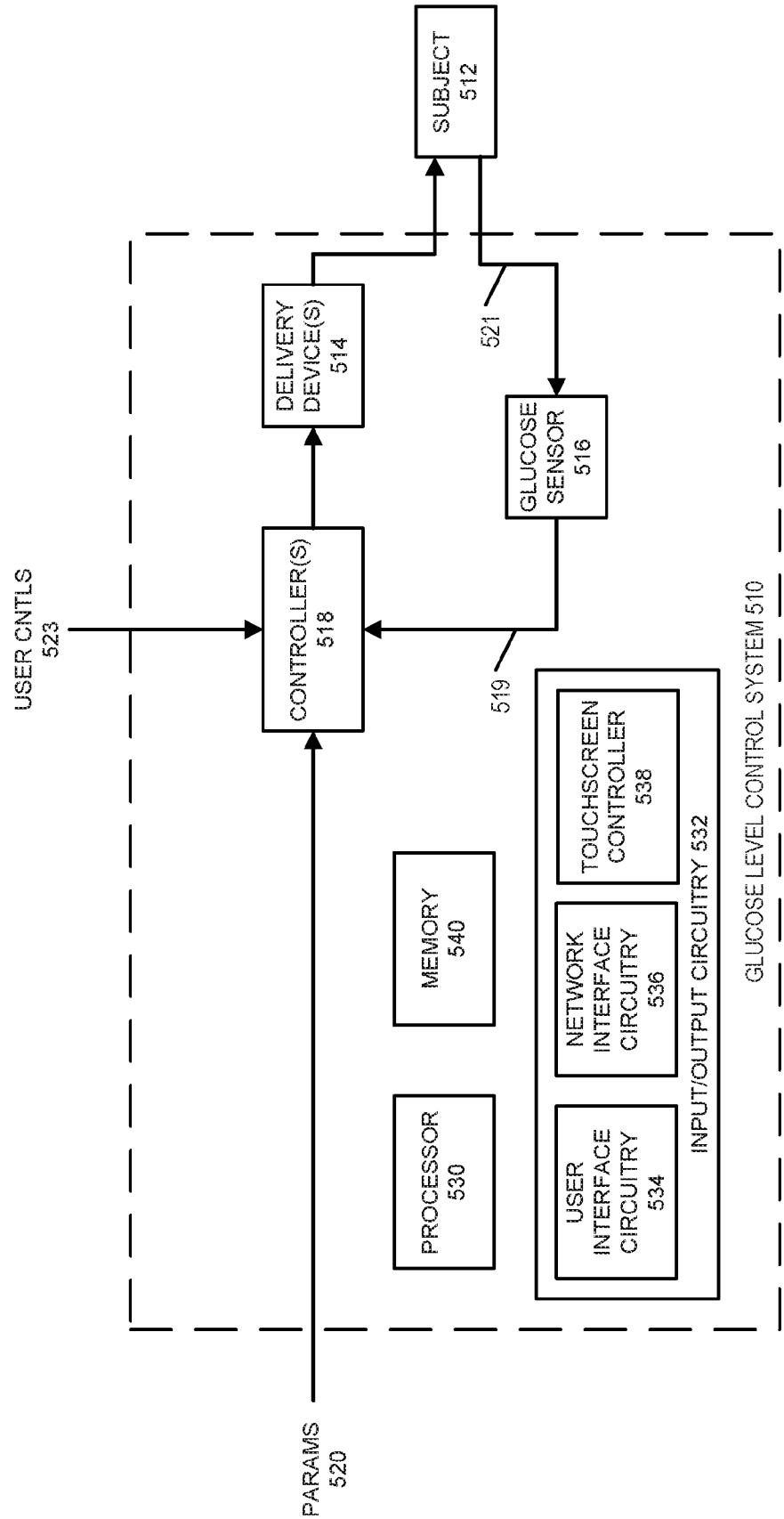
SUBJECT 512
DELIVERY DEVICE(S) 514
521
GLUCOSE SENSOR 516
USER CNTLS 523
CONTROLLER(S) 518
519
MEMORY 540
TOUCHSCREEN CONTROLLER 538
NETWORK INTERFACE CIRCUITRY 536
USER INTERFACE CIRCUITRY 534
INPUT/OUTPUT CIRCUITRY 532
PROCESSOR 530
GLUCOSE LEVEL CONTROL SYSTEM 510
PARAMS 520

FIG. 5

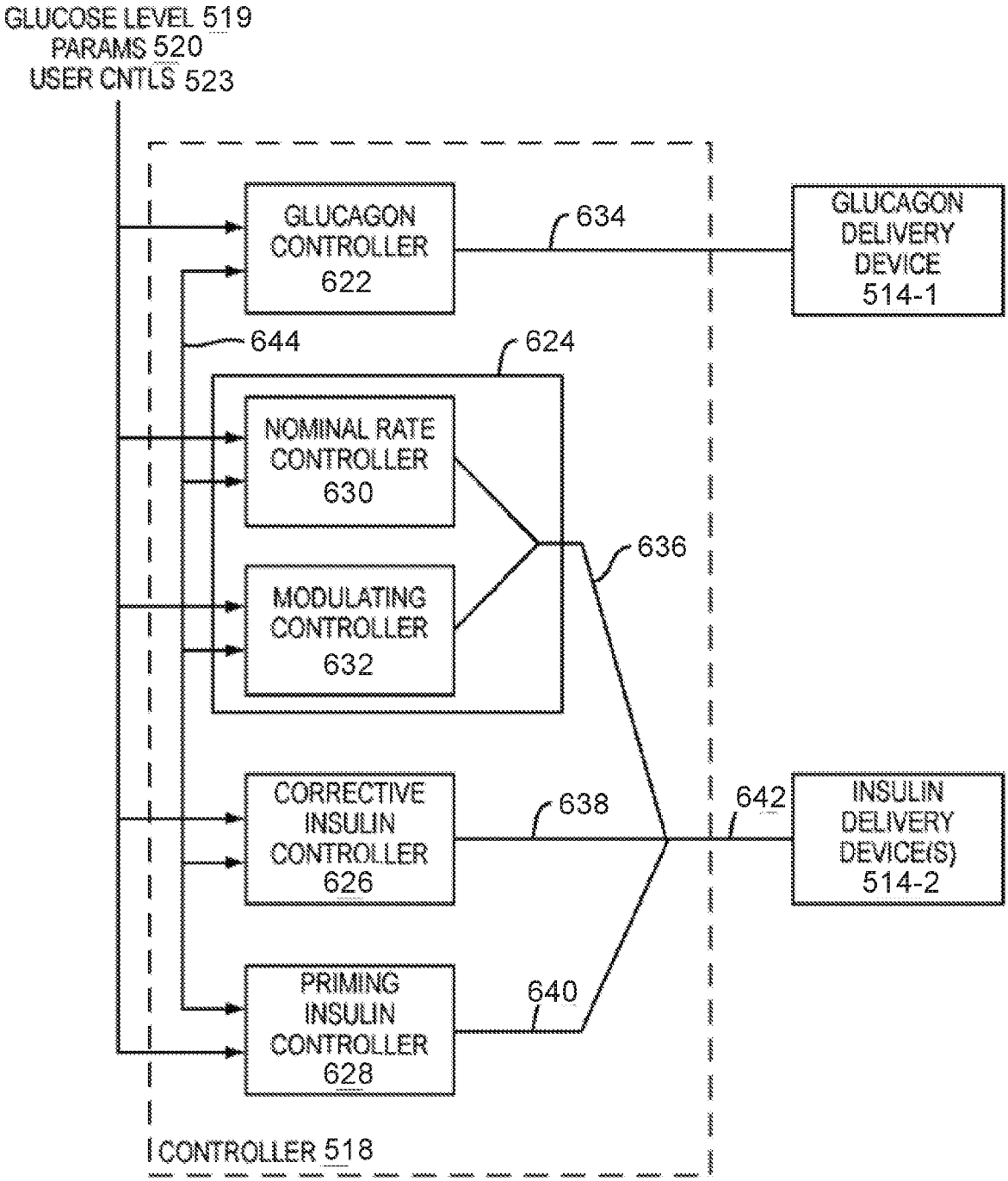
GLUCOSE LEVEL 519
PARAMS 520
USER CNTLS 523
GLUCAGON CONTROLLER 622
634
GLUCAGON DELIVERY DEVICE 514-1
644
624
NOMINAL RATE CONTROLLER 630
MODULATING CONTROLLER 632
636
CORRECTIVE INSULIN CONTROLLER 626
638
642
INSULIN DELIVERY DEVICE(S) 514-2
PRIMING INSULIN CONTROLLER 628
640
CONTROLLER 518

FIG. 6

CARBOHYDRATE THERAPY EQUIVALENCE TRACKING

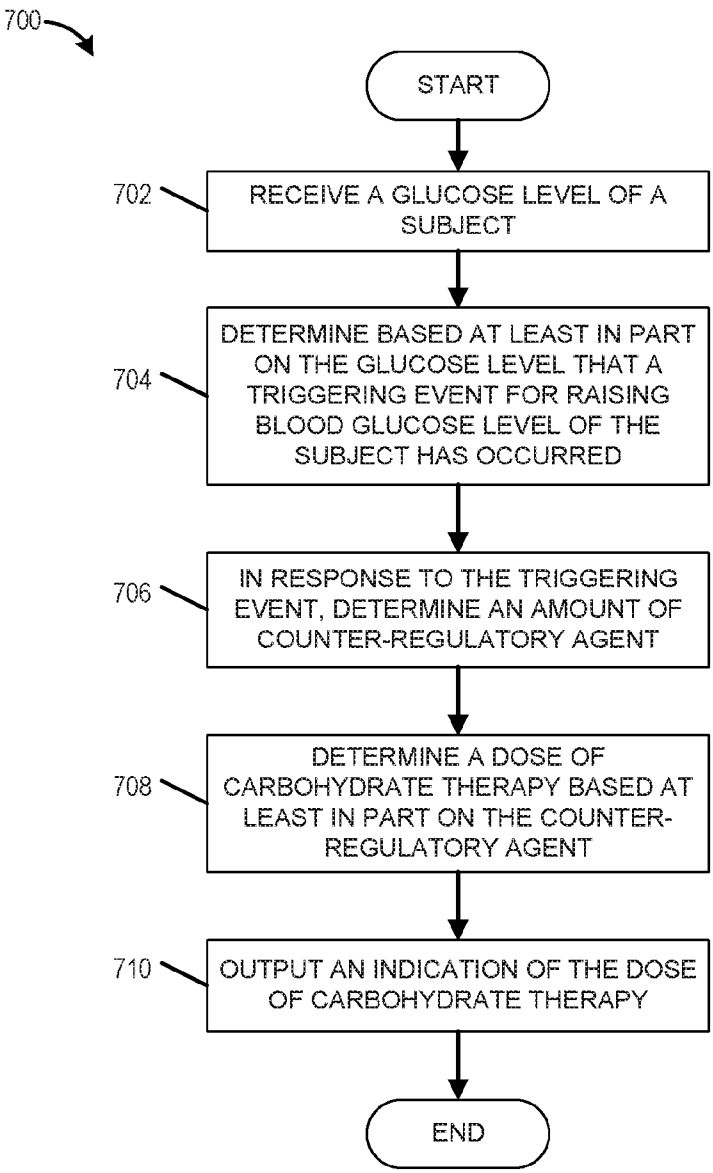

FIG. 7

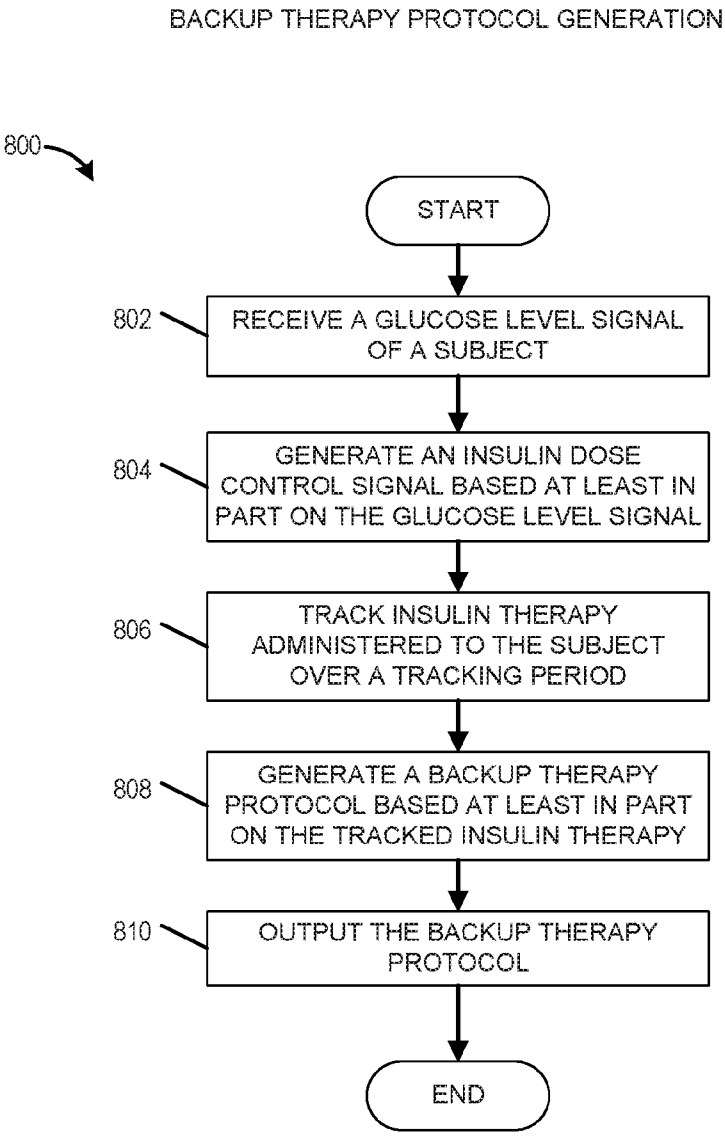
BACKUP THERAPY PROTOCOL GENERATION
800
START
802
RECEIVE A GLUCOSE LEVEL SIGNAL OF A SUBJECT
804
GENERATE AN INSULIN DOSE CONTROL SIGNAL BASED AT LEAST IN PART ON THE GLUCOSE LEVEL SIGNAL
806
TRACK INSULIN THERAPY ADMINISTERED TO THE SUBJECT OVER A TRACKING PERIOD
808
GENERATE A BACKUP THERAPY PROTOCOL BASED AT LEAST IN PART ON THE TRACKED INSULIN THERAPY
810
OUTPUT THE BACKUP THERAPY PROTOCOL
END

FIG. 8

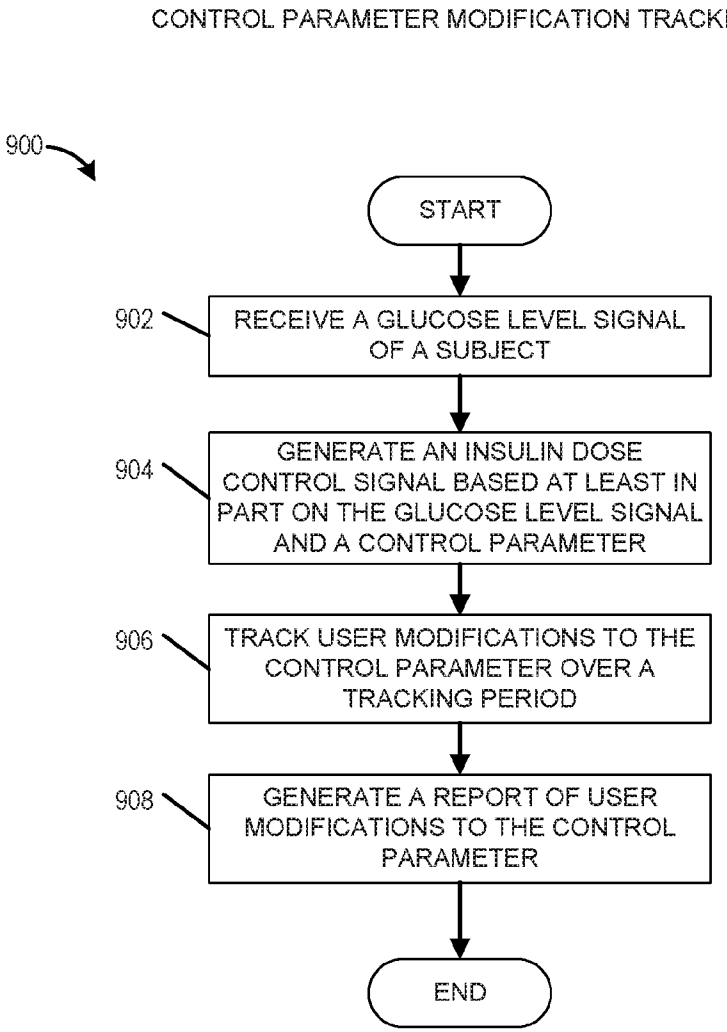
CONTROL PARAMETER MODIFICATION TRACKING
900
START
902
RECEIVE A GLUCOSE LEVEL SIGNAL OF A SUBJECT
904
GENERATE AN INSULIN DOSE CONTROL SIGNAL BASED AT LEAST IN PART ON THE GLUCOSE LEVEL SIGNAL AND A CONTROL PARAMETER
906
TRACK USER MODIFICATIONS TO THE CONTROL PARAMETER OVER A TRACKING PERIOD
908
GENERATE A REPORT OF USER MODIFICATIONS TO THE CONTROL PARAMETER
END

FIG. 9

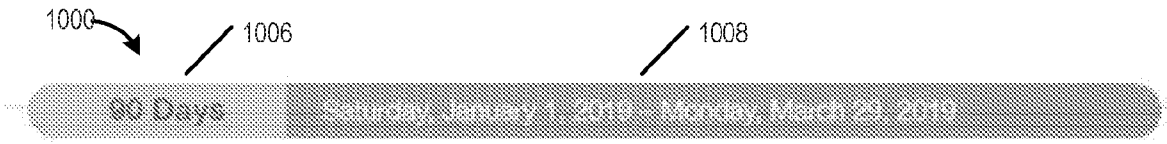

Backup Therapy

Your glucose control system has learned your insulin needs. If your glucose control system goes offline or is temporarily unavailable, the below protocol is recommended for use for up to 72 hours.

Injections	
Usual Breakfast	6 Units
Usual Lunch	8 Units
Usual Dinner	8 Units
Long Acting Insulin Units	14
Correction Factor mg/dL lowered per 1 Unit	9mg/dL

1004

Pump Settings	
Usual Breakfast Units	6 Units
Usual Lunch Units	8 Units
Usual Dinner Units	8 Units
Basal Rate 12:00 A.M – 6:00 A.M.	.6 units per hour
Basal Rate 6:00 A.M – 12:00 P.M.	.5 units per hour
Basal Rate 12:00 P.M – 6:00 P.M.	.8 units per hour
Basal Rate 6:00 P.M – 12:00 A.M.	.7 units per hour
Correction Factor mg/dL lowered per 1 Unit	9 mg/dL

Autonomous Control Summary

The autonomous control summary provides you key information about your glucose control performance during the specified time period.

1010

152 mg/dL Mean Glucose (CGM)	##% Time in range 70-180 mg/dL	#.#% Time < 54 mg/dL	4.2 Mean Meal Announcements Per Day	45.2u Total Daily Insulin	98% CGM Connectivity Uptime
6.9% Estimated A1C	##% >180 mg/dL	#.#%		3.2u Total Daily Glucagon	

FIG. 10

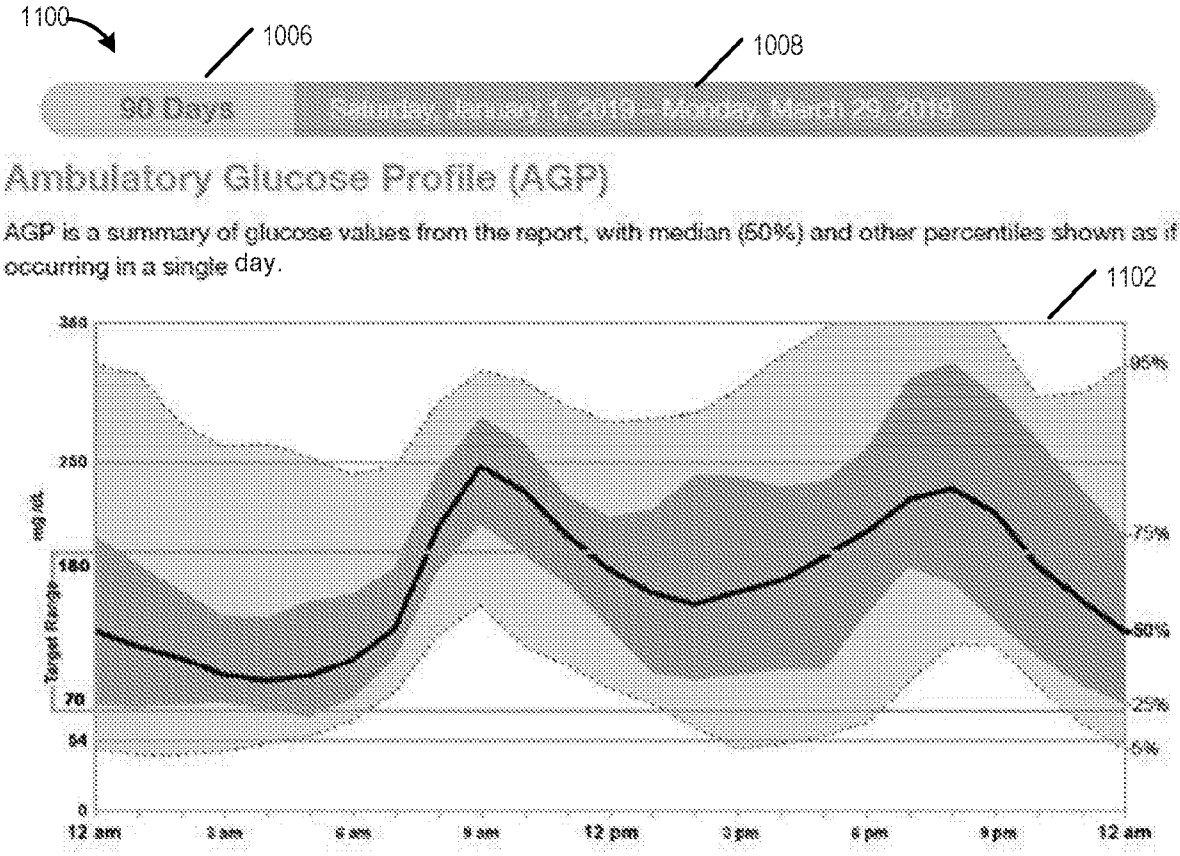

Adjustable Settings & Behavior

Settings

1110

	Current Entry	Previous Entry
Body Weight	### pounds	### pounds last set on DD/MM/YYYY

Bionic Daytime Target	% time selected
Higher	##%
Usual	##%
Lower	##%

Bionic Nighttime Target	% time selected
Higher	##%
Usual	##%
Lower	##%

1104

Bionic Temporary Targets: You set a temporary target ## times during the selected date range.

1106

Pause Insulin: You paused insulin ## times during the selected date range.

1108

FIG. 11

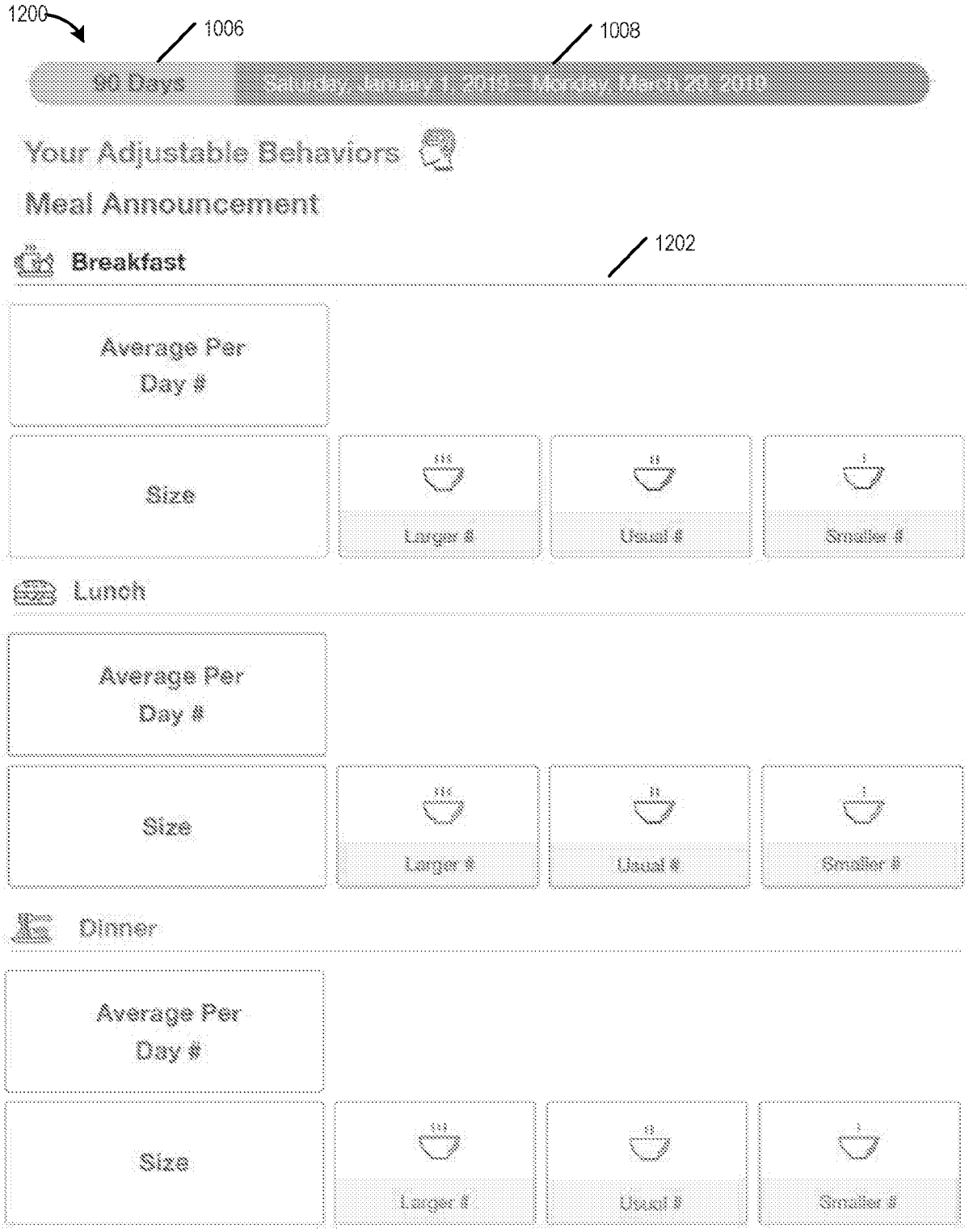
1200
1006
1008
90 Days
Your Adjustable Behaviors
Meal Announcement
Breakfast
1202
Average Per Day #
Size
Larger #
Usual #
Smaller #
Lunch
Average Per Day #
Size
Larger #
Usual #
Smaller #
Dinner
Average Per Day #
Size
Larger #
Usual #
Smaller #

FIG. 12

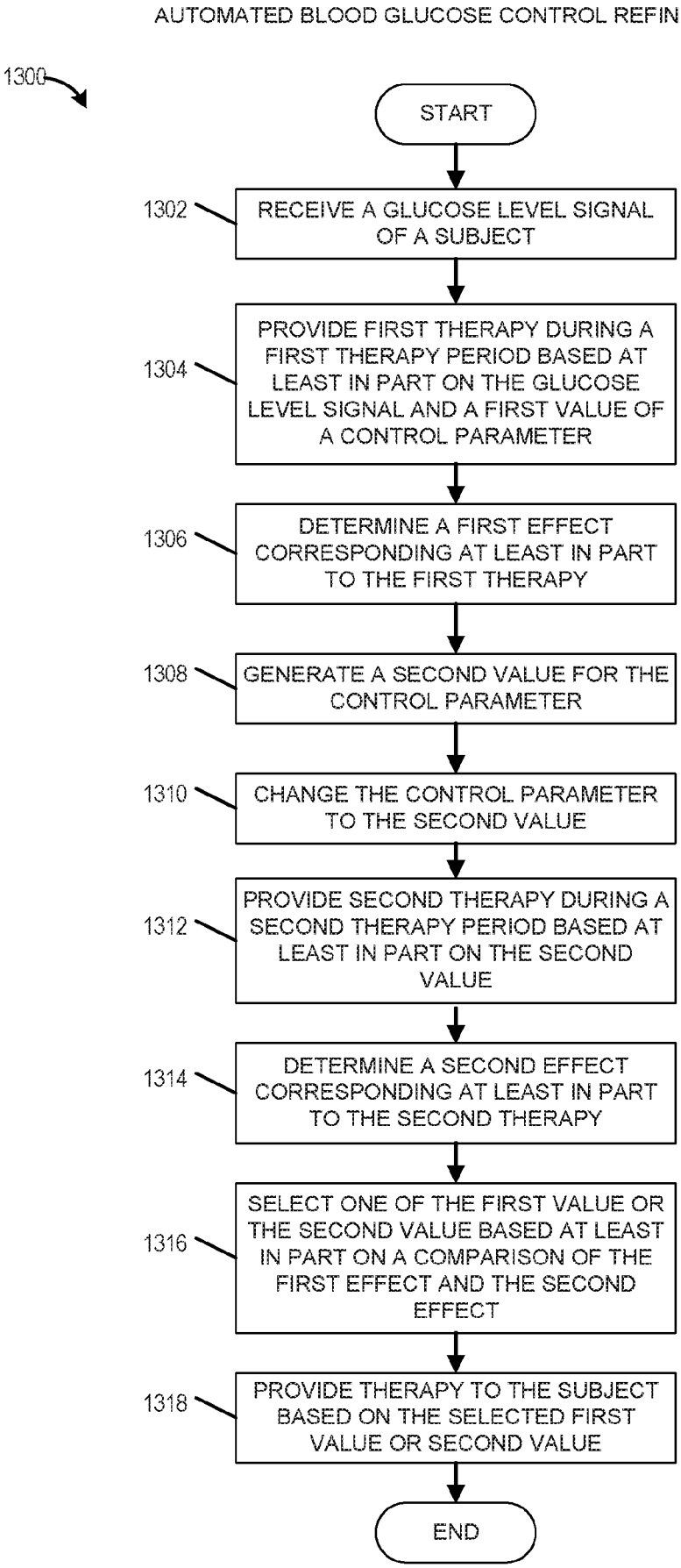
AUTOMATED BLOOD GLUCOSE CONTROL REFINEMENT
1300
START
1302
RECEIVE A GLUCOSE LEVEL SIGNAL OF A SUBJECT
1304
PROVIDE FIRST THERAPY DURING A FIRST THERAPY PERIOD BASED AT LEAST IN PART ON THE GLUCOSE LEVEL SIGNAL AND A FIRST VALUE OF A CONTROL PARAMETER
1306
DETERMINE A FIRST EFFECT CORRESPONDING AT LEAST IN PART TO THE FIRST THERAPY
1308
GENERATE A SECOND VALUE FOR THE CONTROL PARAMETER
1310
CHANGE THE CONTROL PARAMETER TO THE SECOND VALUE
1312
PROVIDE SECOND THERAPY DURING A SECOND THERAPY PERIOD BASED AT LEAST IN PART ON THE SECOND VALUE
1314
DETERMINE A SECOND EFFECT CORRESPONDING AT LEAST IN PART TO THE SECOND THERAPY
1316
SELECT ONE OF THE FIRST VALUE OR THE SECOND VALUE BASED AT LEAST IN PART ON A COMPARISON OF THE FIRST EFFECT AND THE SECOND EFFECT
1318
PROVIDE THERAPY TO THE SUBJECT BASED ON THE SELECTED FIRST VALUE OR SECOND VALUE
END

FIG. 13

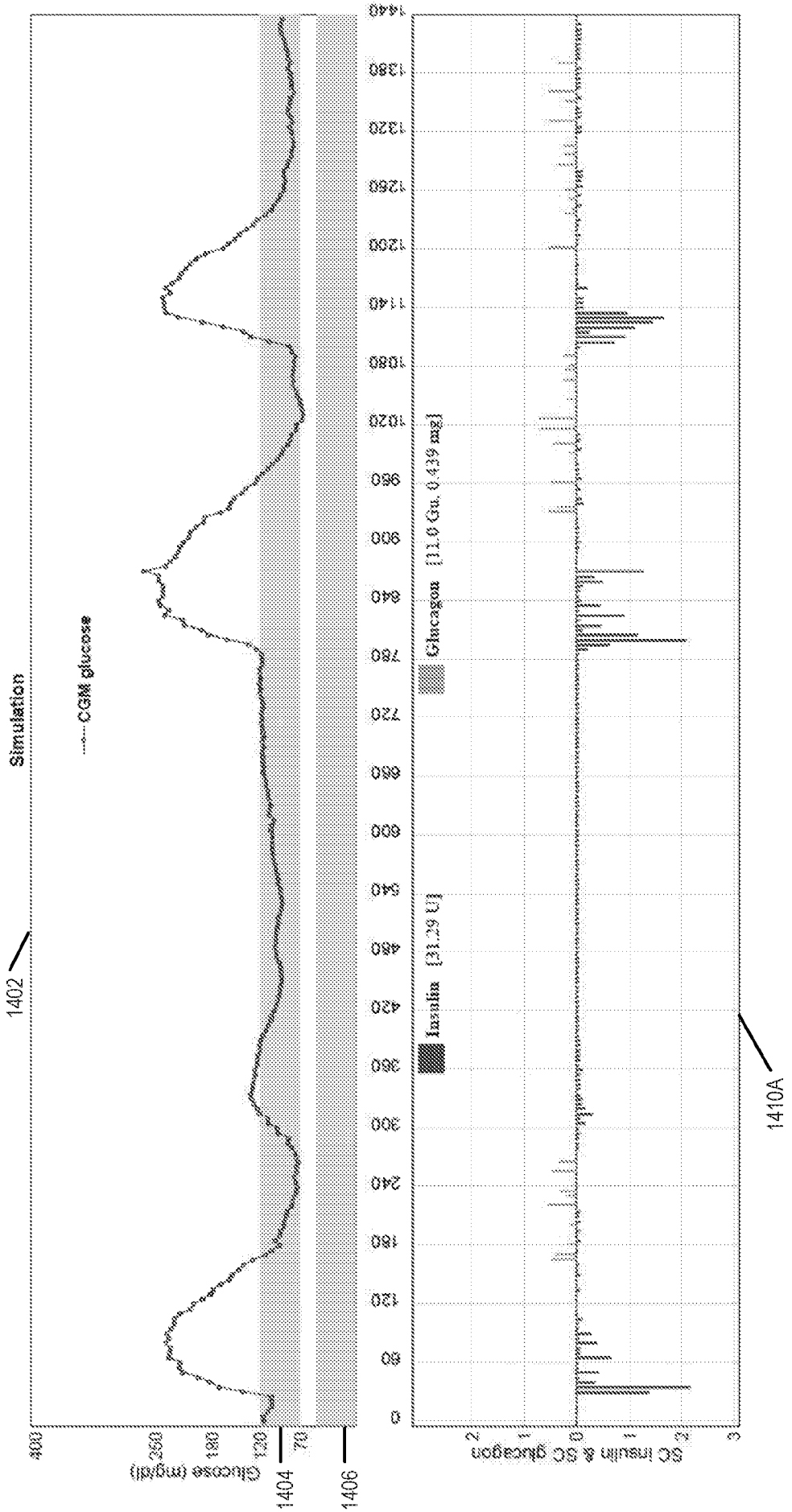
Simulation
CGM glucose
Glucose (mg/dl)
400
260
180
120
70
1402
1404
1406
Glucagon [12.0 Gu, 0.439 mg]
Insulin [31.29 U]
SC insulin & SC glucagon
1410A

FIG. 14A

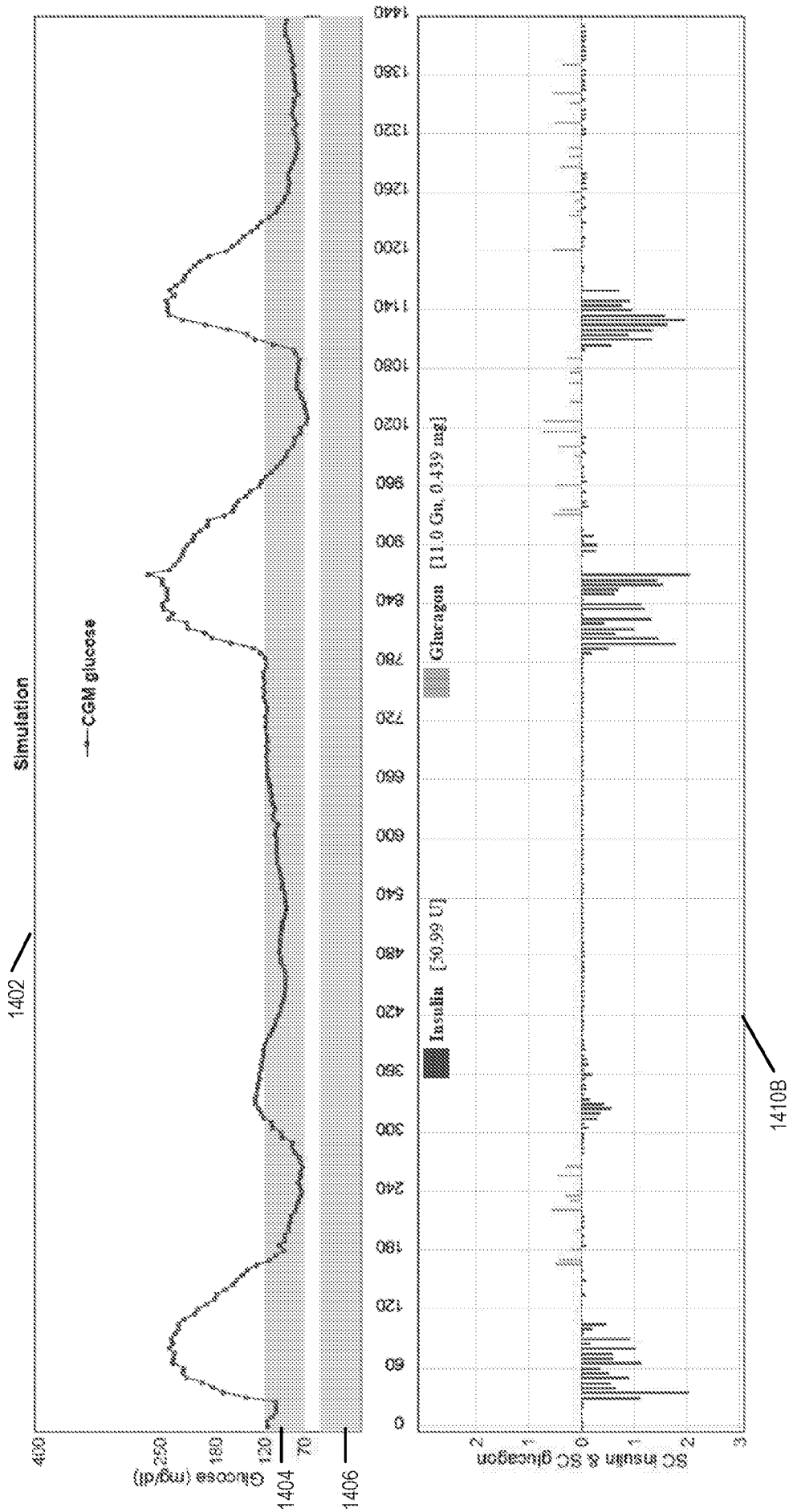
Simulation
CGM glucose
Glucose (mg/dl)
400
250
180
120
70
1402
1404
1406
Glucagon [11.0 Gn, 0.439 ug]
Insulin [30.99 U]
SC Insulin & SC Glucagon
1410B

FIG. 14B

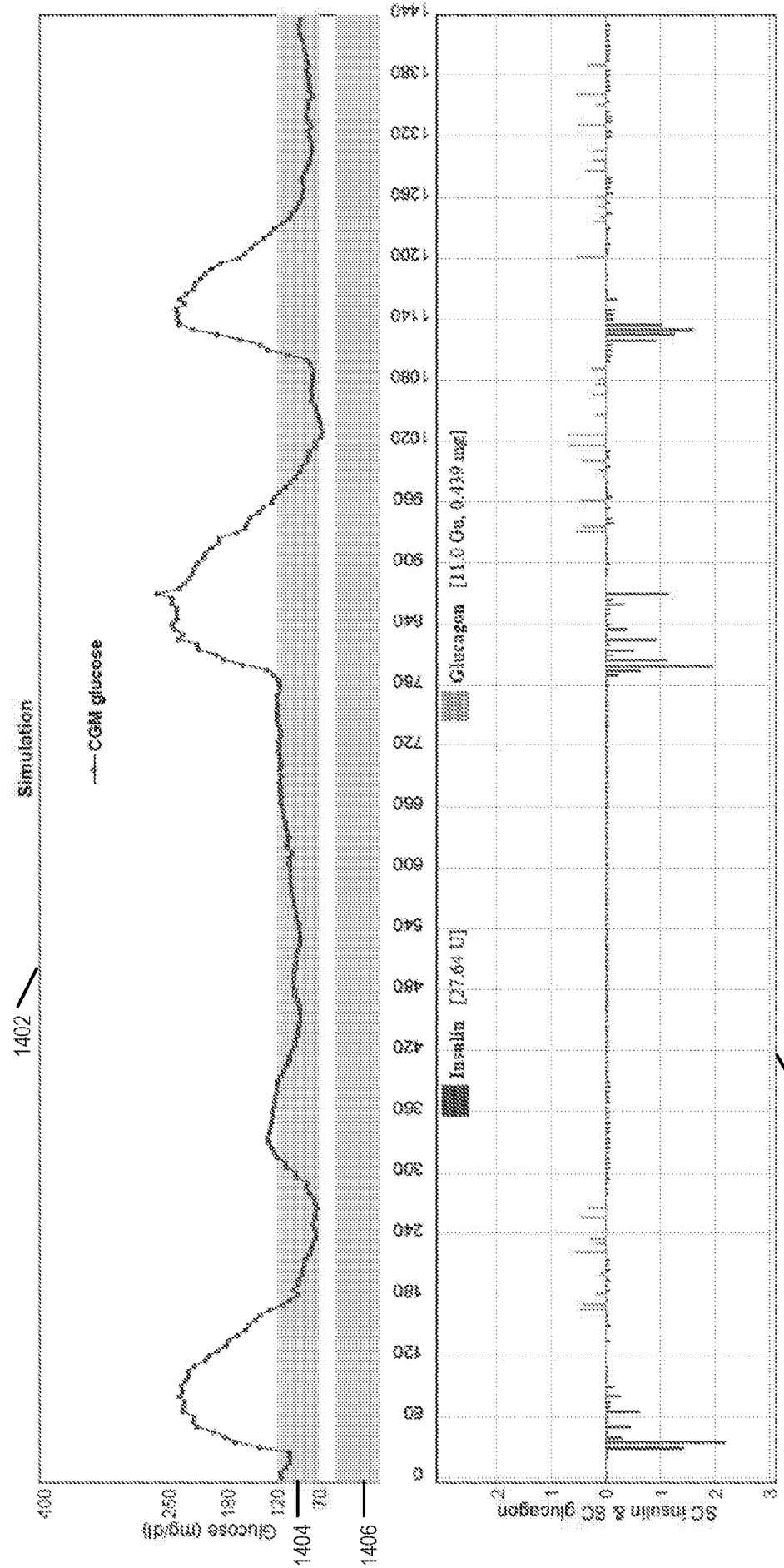
Simulation
CGM glucose
Glucagon [11.0 Gu, 0.439 mg]
Insulin [27.64 U]
Glucose (mg/dl)
SC insulin & SC glucagon
1402
1404
1406
1410C

FIG. 14C