W. S. ADAMS.

COOLING APPARATUS.

APPLICATION FILED OCT. 17, 1919.

1,425,739. Patented Aug. 15, 1922.

Fig. 1.

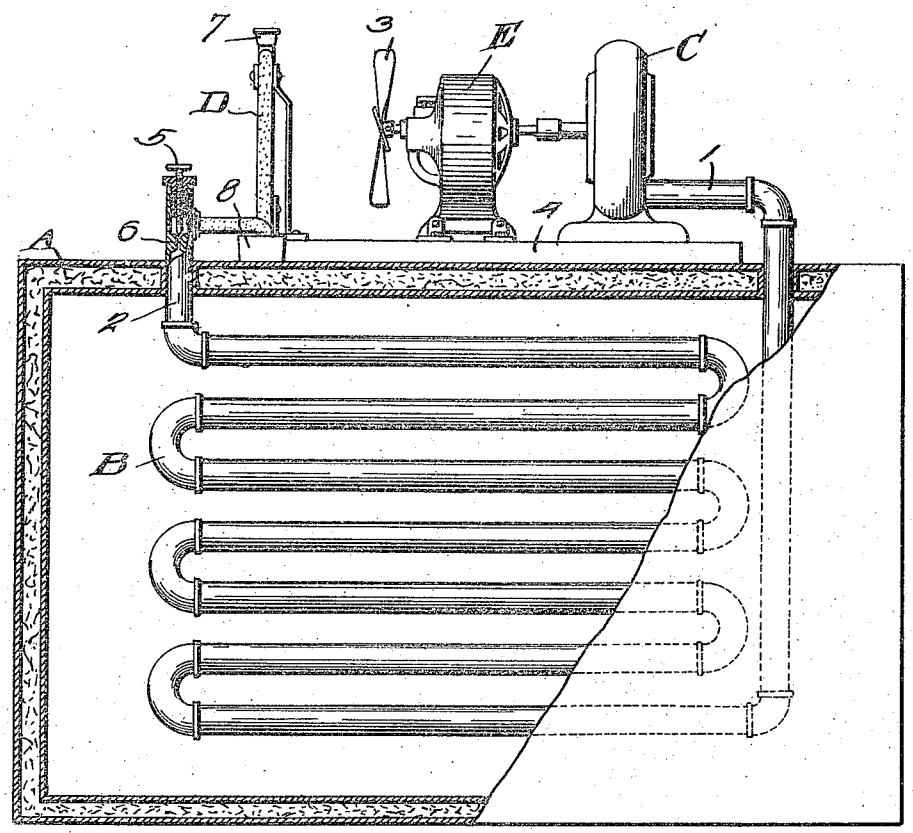

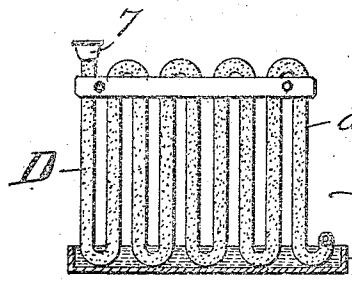

Fig. 2.

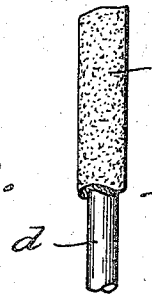

Fig. 3

Witness

Inventor

Warren S. Adams

By Robert Watson

Attorney

UNITED STATES PATENT OFFICE.

WARREN STANLEY ADAMS, OF BUFFALO, NEW YORK.

COOLING APPARATUS.

1,425,739. Specification of Letters Patent. Patented Aug. 15, 1922.

Application filed October 17, 1919. Serial No. 331,445.

To all whom it may concern:

Be it known that I, WARREN S. ADAMS, a citizen of the United States, residing at Buffalo, in the county of Erie and State of New York, have invented certain new and useful Improvements in Cooling Apparatus, of which the following is a specification.

In cooling small refrigerator boxes, such as are used for household purposes, the compression system of cooling is generally employed. It is possible by this system to maintain low temperatures in the boxes, but the apparatus necessary for this system is complicated, must be well made and fitted, and is somewhat expensive to construct and maintain. For preserving meats and other perishable foods for a reasonable length of time, it is not necessary to maintain a very low temperature in the refrigerator box, and an apparatus that will maintain a temperature of about 45 to 50° F. will answer the ordinary requirements.

The purpose of my invention is to provide a simple cooling system for refrigerator boxes, which is inexpensive to construct and maintain, and which will maintain a temperature in the box low enough to prevent spoilage of the contents, say 40 to 45° F., without, however, being capable of producing a freezing temperature. For this purpose, I arrange a coil within the box, with its ends extending out of the box. One end of the coil is connected to the suction side of a suitable pump, and the other end of the coil is provided with a restricted opening, so that when the pump is in operation, a partial vacuum will be created within the coil, and air, at atmospheric pressure, flowing into the coil through the restricted opening, will expand within and cool the coil. The pump for drawing the air through the coil may be of very simple design, since a high vacuum in the coil is not essential, and this pump may be operated by any suitable means, preferably an electric motor, which motor may be controlled by a thermostatic switch, in the usual way, to start and stop at predetermined changes in temperature within the box. As an additional feature, I may employ a radiator outside the box for pre-cooling the air before it is expanded into the coil within the box. This radiator preferably comprises a coil having absorbent material, kept moist, on its outer surface, and a fan, operated by the motor which drives the pump, causes a flow of air past the coils of the radiator. The evaporation of the moisture from the absorbent material by the air draft causes cooling of the radiator coils and an abstraction of heat from the air passing through the radiator.

In the accompanying drawing, which illustrates my invention,

Fig. 1 is a side elevation of the cooling plant, including the refrigerator box, the latter being shown partly broken away;

Fig. 2 is a front elevation of the radiator; and,

Fig. 3 is a detail showing a portion of the radiator pipe with its absorbent covering.

Referring to the drawing, A indicates a refrigerator box, in which is arranged a cooling coil B having one of its ends, 1, extending out of the box and connected to the suction side of a pump C. The opposite end, 2, of the coil is connected to a radiator coil D. A motor E, shown as an electric motor, is coupled to the pump C and carries a fan 3, which is arranged opposite the radiator coil and adapted to force or draw air past the sections of said coil. The radiator coil, motor, and pump are preferably mounted upon a suitable base 4, which may be secured to the top of the refrigerator box. Between the radiator coil and the end of the cooling coil is arranged a needle valve 5, for regulating the admission of air from the former to the latter coil. This valve controls a restricted opening 6 in the part 2. The radiator coil has an open end 7, and it will be evident that when the motor is in operation, air will be drawn through the coils D and B successively, and after passing through the pump, it will be forced again into the atmosphere. The radiator coils are composed of metal tubing *d*, surrounded by an absorbent material *d'*, and below the coil is placed a water pan 8, into which the coil dips. Thus, the coils are kept moist by the water, carried by capillary attraction through the absorbent material, and the fan forcing the air past the radiator, causes evaporation of the moisture and cooling of the metal tubing and hence, cooling of the air flowing through the tubing.

In operation, the valve 5 is set so as to restrict the flow of air into the cooling coil B. When the pump is in operation, air flows through the coil D, wherein it is pre-cooled by the evaporation of the moisture caused by the external air current. As the pump

creates a partial vacuum in the cooling coil B, the air, which is at atmospheric pressure in the coil D, upon entering the coil B through the restricted orifice 6 expands, and takes up heat from the coil B as it passes through the latter to the pump. This will result in lowering the temperature within the refrigerator box to a sufficient degree to preserve foodstuffs.

As it is not necessary to maintain a very high vacuum in the coil B, a single compression or rotary pump of simple design will answer for drawing the air through the coils.

What I claim is:

The combination with a refrigerator box, of a cooling coil within the box, a radiator arranged outside of the box and connected to one end of said coil, said radiator having absorbent material thereon, means for supplying moisture to said material, a pump adapted to draw air through said radiator and coil successively, means for restricting the flow of air into said coil, a motor for operating said pump, and a fan operated by the motor and adapted to create an air draft past the radiator.

In testimony whereof I affix my signature.

WARREN STANLEY ADAMS.