June 7, 1960 J. P. KARPUK ET AL 2,939,410

CONTROL APPARATUS FOR BLOW TORCH

Filed June 17, 1954 4 Sheets-Sheet 1

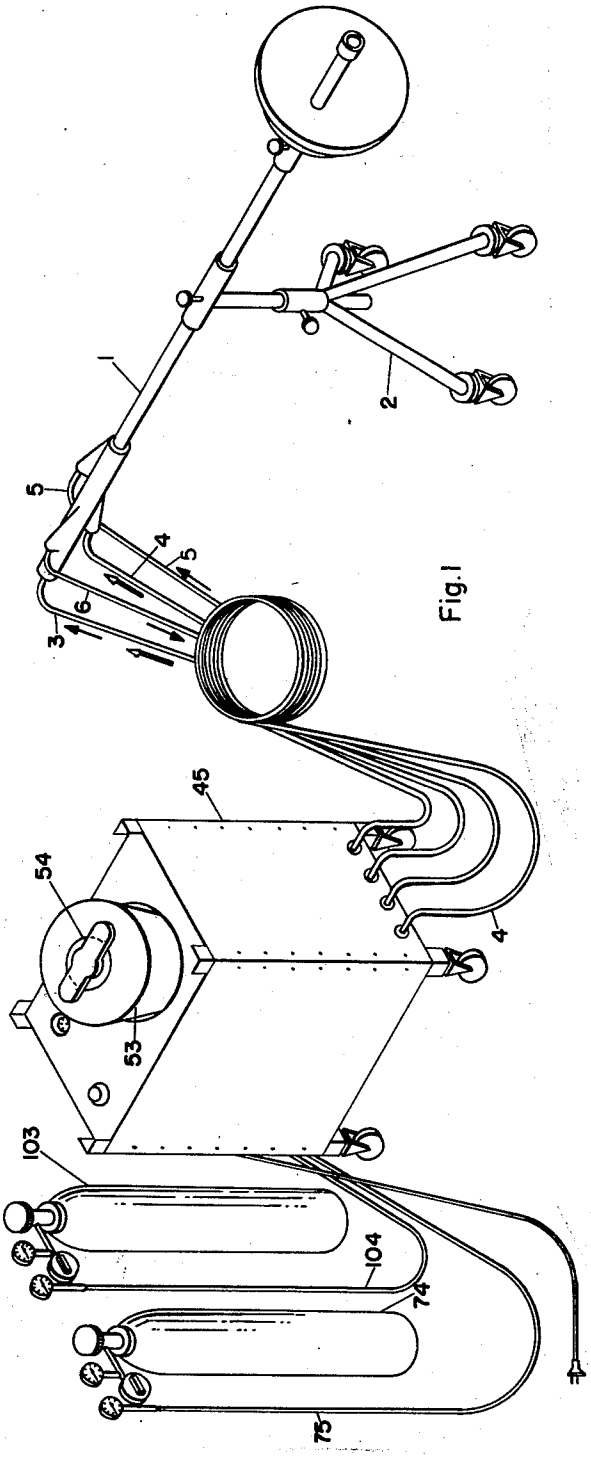

Fig. 1

INVENTORS
JOHN P. KARPUK &
JESSE B. THOMAS
BY

Arthur J. Robert
ATTORNEY

June 7, 1960 J. P. KARPUK ET AL 2,939,410

CONTROL APPARATUS FOR BLOW TORCH

Filed June 17, 1954

4 Sheets-Sheet 2

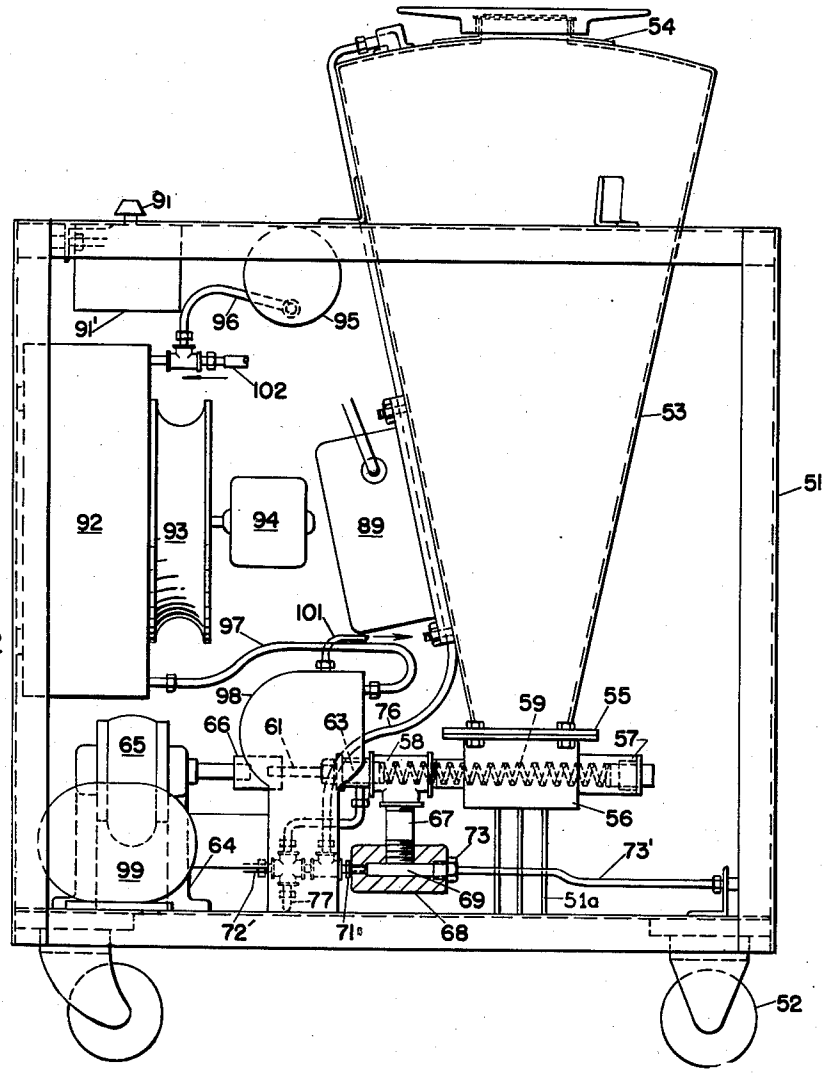

Fig. 2

INVENTORS
JOHN P. KARPUK &
JESSE B. THOMAS

BY

Arthur Robert

ATTORNEY

June 7, 1960 J. P. KARPUK ET AL 2,939,410

CONTROL APPARATUS FOR BLOW TORCH

Filed June 17, 1954 4 Sheets-Sheet 3

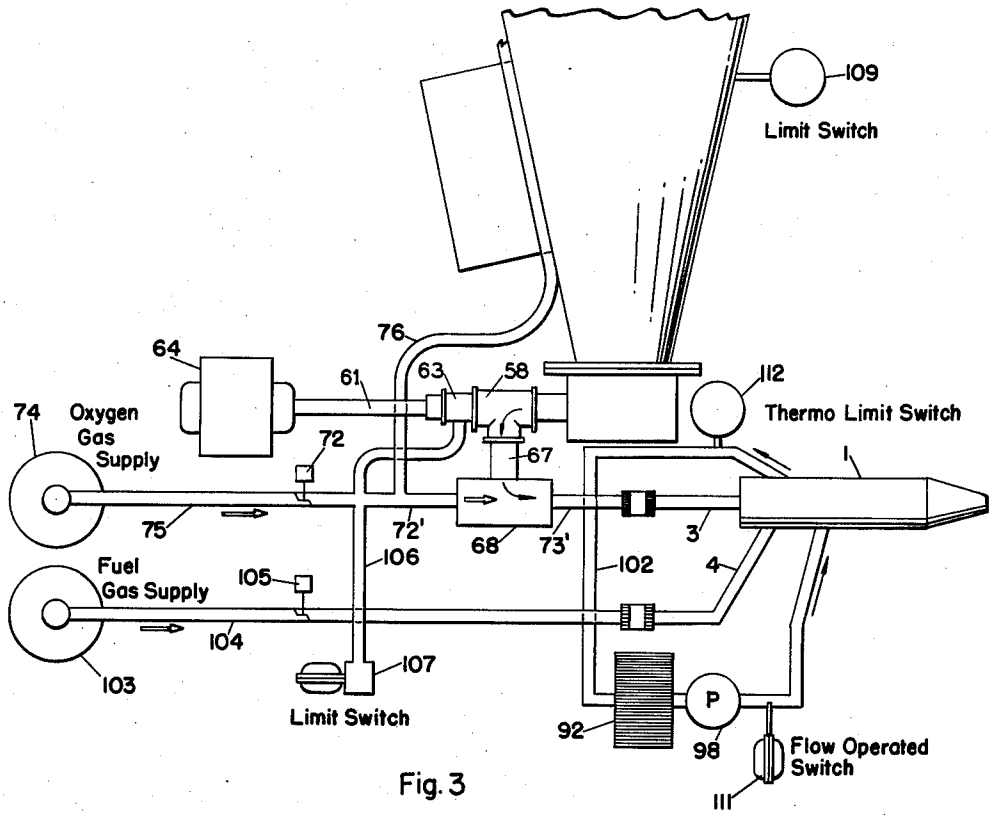

Fig. 3

INVENTORS
JOHN P. KARPUK &
JESSE B. THOMAS

BY

Arthur J. Robert
ATTORNEY

June 7, 1960 J. P. KARPUK ET AL 2,939,410

CONTROL APPARATUS FOR BLOW TORCH

Filed June 17, 1954 4 Sheets-Sheet 4

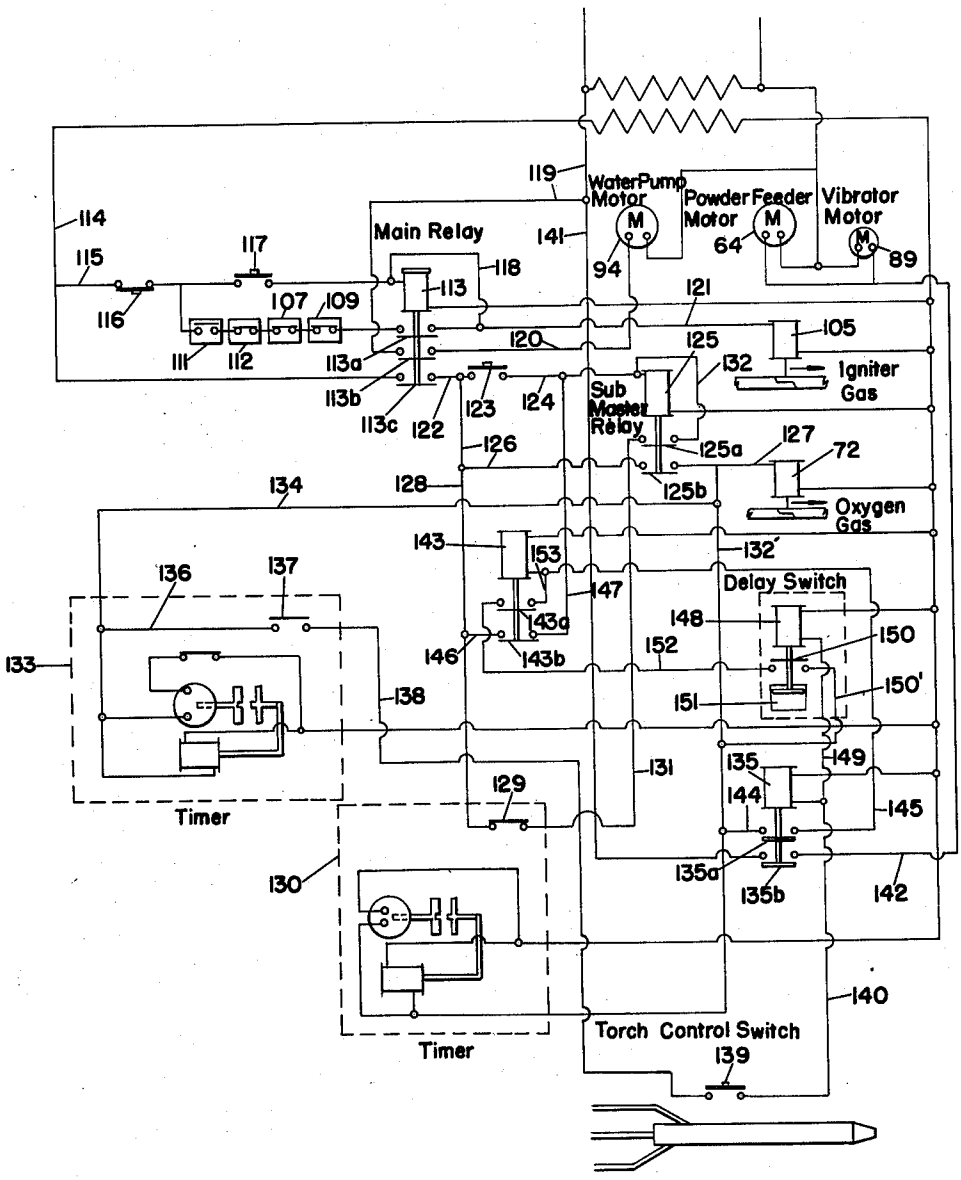

Fig.4

INVENTORS
JOHN P. KARPUK &
JESSE B. THOMAS

BY

Arthur J. Robert
ATTORNEY

United States Patent Office 2,939,410 Patented June 7, 1960

2,939,410

CONTROL APPARATUS FOR BLOW TORCH

John P. Karpuk and Jesse B. Thomas, Louisville, Ky., assignors to Reynolds Metals Company, Louisville, Ky., a corporation of Delaware

Filed June 17, 1954, Ser. No. 437,438

12 Claims. (Cl. 110—22)

The present invention relates to blowtorches for burning powdered metals, and relates in particular to the control mechanism therefor.

In the application for patent filed by Aristid V. Grosse, on December 7, 1951, Serial No. 260,424, now abandoned, for A Method for Combustion of Metals, there is described and claimed a method for burning highly exothermic metal powders at a high rate to produce high temperatures, and a blow torch for burning metal powder is described that is especially suitable for cutting through refractory materials.

A torch of this type burns metal powder in a field or zone of oxygen. For metal powder of a predetermined size range, the velocity of the oxygen must be sufficient to carry along the metal powder and keep it in suspension, and this velocity must be maintained above a certain critical value to prevent flash back. Also, the oxygen velocity must not be so great as to blow away or extinguish the flame. To maintain these conditions requires that the amount of metal powder fed into the oxygen stream be closely regulated. The metal powder flame may be ignited initially by an electrical igniter, or by the heat from any suitable fuel gas flame provided at the burner tip, and ordinarily, the fuel gas for this purpose may be supplied continually during operation of the torch. To prevent the intense heat at the tip of the torch from destroying the torch, cooling water may be circulated through the torch. Preferably the cooling water is circulated between the oxygen and igniter gas conduits in the torch to prevent possible overheating of the fuel gas.

This invention has for one of its objects the provision of an apparatus for mixing a metal powder with a stream of oxygen and conveying the mixture to a blow torch in a manner that minimizes flash backs, and avoids the dangers incidental thereto.

Another object is the provision of a feeding apparatus for supplying metal powder into an oxygen stream which will operate for long periods without deterioration of the mechanism.

Another object is the provision of an apparatus arranged to prevent accumulations of metal powder in the oxygen line.

Another object is the provision of such an apparatus which is of simple construction and is easy to operate or control.

Another object is the provision of an apparatus for feeding a mixture of metal powder and oxygen to a blow torch which embodies automatic control means for the starting or stopping sequence in operating the torch.

Another object is the provision of a control apparatus which will automatically stop operation of the torch should the torch be abandoned by the operator.

In the apparatus to which the present invention relates metal powder is fed into a stream of oxygen flowing at suitable velocity, the direction of introduction of the powder being transverse or lengthwise of the oxygen flow, as desired. It is preferred to provide a mixing chamber of

greater cross sectional area than the oxygen conduit leading therefrom to the torch so that, in the event of a flashback occurring, the flame will not be carried into the control instruments.

The safety controls of the present invention include a water flow operated switch arranged to shut off the flow of oxygen and metal powder if for any reason, the flow of cooling water to the blow-torch reduces below a predetermined minimum; a water temperature controlled switch to stop the flow of oxygen and metal powder if the water temperature rises too high; an oxygen pressure minimum limit switch to shut off the flow of oxygen and metal powder if the oxygen pressure falls too low; and a maximum pressure limit switch to stop the flow of oxygen if the oxygen pressure rises too high. The controls also include an arrangement so that in the starting cycle of operation when the flow of oxygen is initiated, the flow of metal powder to the mixer is automatically delayed for a predetermined time to permit the flow of oxygen to purge the line between the mixing chamber and torch of metal powder. Thereafter, upon initiating flow of metal powder, when the flow of metal powder is stopped by the operator, the flow of oxygen is automatically continued for a predetermined time. This predetermined time preferably is long enough to enable the operator to inspect the work, and if desired, resume operation of the torch. However, if operation of the torch is not resumed in the predetermined time, the flow of oxygen is stopped. Once the oxygen flow is stopped, it cannot be started automatically but it requires a positive action of the operator to resume the oxygen flow.

The invention will be described in greater detail in connection with the accompanying drawing illustrating a preferred embodiment of the invention by way of example, and wherein:

Figure 1 is a perspective view showing the entire apparatus;

Figure 2 is a side elevational view of the control mechanism, with parts in section and broken away;

Figure 3 is a diagrammatic view illustrating the operation of the torch and its control mechanism; and

Figure 4 is a wiring diagram illustrating the operation of the control mechanisms.

Referring to the drawing, Figure 1, there is shown a blow torch 1 of suitable construction mounted upon a tripod 2 having connected thereto an oxygen conduit 3, an igniter gas conduit 4, and water supply and return conduits 5, 6 respectively. If desired, the direction of flow of water in conduits 5, 6 may be reversed. The water, ignition gas, and oxygen conduits are connected to a housing member 45 which provides a mechanism for supplying metal powder to the oxygen stream, and provides other accessory equipment and controls which now will be described.

Referring to Figure 2, the housing member comprises a frame 51 suitably constructed of angle iron and mounted on casters 52. A top plate or cover on the frame has an opening to receive a hopper 53 of conical form, suitably secured to the cover by brackets. The hopper is adapted to contain powdered aluminum metal or other suitable powdered metal, and is filled through a removable cover 54. If desired, a pressure relief valve may be provided in the cover.

The open bottom of the hopper has a securing flange 55 for the open top of a feed screw housing 56. This housing 56 has, at one end, a tubular projection 57 providing a dead end bore and, at the opposite end, another tubular projection providing an outlet bore, this latter projection terminating in a T 58. The housing 56 is supported from the bottom of the frame by suitable posts 51a and contains a feed screw 59 extending

from the dead end bore of projection 57 through the housing 56 into the T 58 of its outlet bore. The drive shaft 61 of the feed screw 59 extends from the feed screw through a stuffing box 63 in one end of T 58, and is driven by a motor 64 through reduction gearing 65 coupled thereto by a coupling 66.

The outlet T 58, of the feed screw housing 56, discharges into an outlet conduit 67 connected to a mixer 68. The mixer comprises a housing having a through flow passage 69 therein with an inlet bushing 71 at one end connected to an inlet pipe 72' having a solenoid valve 72 therein (Fig. 4) and a reducing outlet bushing 73 at the other end connected to the conduit 73', which in turn is connected to flexible conduit 4. Oxygen from a suitable tank or bottle 74 (Fig. 1) is conducted to inlet pipe 72' by a conduit 75 and as the oxygen passes through the mixer 68 it picks up and carries the powdered aluminum, discharged by feed screw 59 through conduits 67, through outlet conduits 73' and 3 to the torch where the aluminum is burned. From pipe 72' a branch connection 76 leads to adjacent the top of hopper 53, this connection being upstream from the mixer 68 to insure a higher pressure in hopper 53 than in the mixer and prevent the powder being blown from the mixer back into the hopper. The dust in the hopper is kept in a mobile or fluid condition by an electric hopper vibrator 89 of known construction controlled by a regulating knob 91 (Fig. 2) on a controller box 91' mounted in the housing.

A heat exchanger or radiator 92 is mounted in the housing and carries a blower 93 operated by a motor 94. An accumulator tank 95 on the frame carries water, and is connected by a conduit 96 to the heat exchanger. At the bottom, a conduit 97 connects the heat exchanger 92 to a pump 98 which is driven by motor 99. Cooling water is conducted from the pump 98 through the conduit 101 which connects with flexible conduit 5 to the blowtorch 1. This water returns from the blowtorch by way of conduit 6 which connects to conduit 102 and reenters the radiator 92 where it is cooled.

The operation of the apparatus so far described will be explained in connection with Figure 3 which diagrammatically illustrates the arrangement of the apparatus. The igniter fuel, which preferably is acetylene gas, but may be any other combustible gas or liquid, is supplied from tank or bottle 103 through a conventional reducing valve by a conduit 104 having a solenoid operated valve 105 therein. This conduit 104 connects with the flexible conduit 4 connected to the torch 1. Oxygen gas is supplied from bottle 74 by conduit 75 having the solenoid operated valve 72 therein, and conduit 75 leads by conduit 72' to the mixer 68. From here the mixture of oxygen and metal powder is conducted by pipes 73' and flexible conduit 3 to the blowtorch. A conduit 106 branching from conduit 75 connects to a low pressure limit switch 107 of suitable construction. The conduit 76 supplies pressure to the hopper from conduit 72', and a high pressure limit switch 109 is connected to the hopper. These switches are normally closed. If the oxygen supply pressure falls too low, due, for example to exhaustion of the oxygen bottle, the limit switch 107 is opened to shut valve 72 and stop the flow of oxygen to the torch as will be later explained. In event of a flashback into the hopper, pressure may build up therein, and the high pressure limit switch 109 provides for shutting valve 72 to stop the flow of oxygen in this event.

The circulating water system includes a low flow limit switch 111 preferably located between the pump 98 and torch, and a high temperature limit switch 112 preferably located in the return flow water line 102 ahead of the radiator 92. When the pump is not operating the flow switch 111 is open. Temperature limit switch 112 is normally closed and opens if the water temperature rises to a predetermined maximum. The arrangement of these switches into the electrical operating circuit is illustrated in Figure 4.

Referring to Figure 4, the coil of master or main relay 113 is connected to electrical supply main 114 through a lead 115 which includes a self closing manually opened stop switch 116 and a self opening manually closed master starting switch 117. Relay 113 controls switch 113*a*, 113*b* and 113*c*. A holding circuit for relay 113 is shunted around switch 117 and includes normally open water flow switch 111, normally closed water temperature switch 112, normally closed oxygen low pressure limit switch 107, normally closed hopper high pressure limit switch 109, relay switch 113*a* and holding lead 118. A lead 119 from the main transformer to relay switch 113*b* connects by lead 120 to the water pump motor 94 so that, upon energizing relay 113, switch 113*b* is closed to start the pump. Flow switch 111 remains open until the pump develops enough flow to close the flow switch. Thus, upon manual closing of switch 117 the relay 113 is energized, but upon release of switch 117 relay 113 will not remain energized unless all switches 111, 112, 107 and 109 are closed. That is, master starter switch 117 must be held closed until the pump develops the required minimum flow to close flow switch 111, and thereafter upon release of this starter switch the relay 113 is held energized by the holding circuit. Holding switch 113*a* is connected by lead 121 to the igniter gas solenoid valve 105 so that closing of switch 117 opens the solenoid valve 105 to start the flow of igniter gas to the torch.

Lead 114 extends from the transformer to switch 113*c* and the circuit continues by lead 122 containing self opening manually closed setting switch 123, and by lead 124 to submaster relay 125. Submaster relay 125 operates two switches, 125*a* and 125*b*, and from lead 122 a lead 126 goes to switch 125*b* which connects by a lead 127 to solenoid valve 72 which controls the oxygen flow. It will be seen that after the holding circuit of main relay 113 is energized, the closing or opening of setting switch 123 does not affect the main relay, nor does it affect the flow of igniter gas. However, switch 123 energizes submaster relay 125 to start the flow of oxygen gas, and the flow of oxygen gas stops when submaster relay 125 is de-energized. A holding circuit for the submaster relay includes leads 126, 128 to normally closed timer operated switch 129 of timer 130, and lead 131 to switch 125*a* and holding lead 132. That is, timer operated switch 129 is shunted around manual switch 123. Thus, upon closing normally open setting switch 123 the submaster relay 125 is energized to close switches 125*a* and 125*b* and energize the oxygen valve 72 to start the flow of oxygen to the mixing chamber, and the closing of switch 125*a* completes the holding circuit of relay 125 so that, upon release of switch 123 the submaster relay remains energized as long as timer operated switch 129 is closed.

Connected to lead 127 is a lead 132' that goes to timer 130 to start its operation upon closing of submaster relay switch 125*b*. Timer 130 is set to open time limit switch 129 at some predetermined time interval, as for example, thirty seconds and unless an intervening circuit is established, the opening of time limit switch 129 will deenergize the holding circuit of submaster relay 125, which will open submaster switch 125*b* to deenergize solenoid valve 72 and stop the flow of oxygen. The purpose of this will be later described.

Timer 130 is energized through relay switch 125*b* and leads 127, 132'. Timer 133 is energized through switch 125*b* and leads 127, 132' and 134. At this point it should be mentioned that electrically operated timers 130 and 133 are of the self resetting type of known construction which do not reset until the supply current fails. Thus, when timer 130 opens switch 129, the holding circuit of relay 125 is opened, so that relay 125 opens switch 125*b* to deenergize timers 130 and 133 to cause

them to reset. Any desired type of timers may be used for this purpose.

The powder feeder relay **135** operates switches **135***a* and **135***b*, and its energizing circuit includes leads **122**, **126**, switch **125***b*, leads **127**, **132'**, **134**, **136**, timer operated switch **137** (normally open), lead **138**, normally open torch control switch **139** and lead **140**. Relay switch **135***b* closes the energizing circuits of the powder feeder motor **64** and vibrator motor **89**, which includes lead **141**, switch **135***b*, and lead **142**.

Timer **133** is energized by the closing of switch **125***b* at the same time timer **130** is energized. Timer **133** is set to close switch **137** after a predetermined time interval, for example, thirty seconds, but with a slight lead (preferably one second or less) over timer opened switch **129**, so that switch **137** will be closed by timer **133** a moment before switch **129** is opened by timer **130**. Thus, torch operator switch **139** can energize relay **135** to start the feed of powder only if the switch **139** is in closed position during the interval between the closing of switch **137** and opening of switch **129**. If the torch operator switch **139** is not held closed during this interval the opening of switch **129** by timer **130** deenergizes the holding circuit of relay **125** as previously described, thus opening switch **125***b* to deenergize oxygen valve **72**, and preventing energization of the operating circuit of relay **135**, and resetting the timers **130**, **133**. This arrangement insures stopping the flow of oxygen to the torch in the event the torch is not put into operation in the predetermined time set to open switch **129** after the flow of oxygen to the torch begins. To insure that switch **139** is closed at the proper time, the operator should hold switch **139** closed during, or immediately after the closing of switch **123**. If switch **139** fails to catch the proper time, the starting cycle must be initiated by again manually closing the setting switch **123**.

A holding circuit, shunting switch **123**, is closed when switch **139** is closed at the proper time. This holding circuit includes a holding relay **143**, operating switches **143***a* and **143***b*. The closing of switch **139** at the proper time energizes relay **135**, and the closing of switch **135***a* thereby sets up an energizing circuit for relay **143** through switch **125***b*, leads **127**, **132'**, **144**, switch **135***a* and lead **145**. The closing of this holding circuit keeps relay **125** energized, and renders ineffective the opening of timer switch **129** in the holding circuit of relay **125**. That is, switch **129** is substituted by relay **143**.

From the description so far pursued it will be seen that when switch **139** is closed at the proper time, relay **135** closes to start the feed of powder to the torch and also operates relay **143** to hold relay **125** energized. Thereafter, upon opening of switch **139**, relay **135** is deenergized to stop the flow of powder, and in the circuit so far described, relay **143** also would be deenergized to deenergize relay **125** and stop the flow of oxygen. In this event, it would be necessary to start the torch by depressing switch **123** and holding switch **139** closed for the half minute interval required by the timers **130**, **133** to start the torch. It is desirable to allow the torch to be extinguished for a short time to allow inspection of the work, without encountering the delay involved at the start of the cycle. For this purpose, a delay means is provided to allow continued oxygen flow for a predetermined time to purge the line, and permit immediate resumption of the flame within this time. For this purpose a holding circuit for relay **143** is provided that includes a delay means to hold relay **143** energized a predetermined time after opening of switch **139**, so the flow of oxygen is not immediately stopped. This delay means includes a timer solenoid **148** connected by lead **149** to lead **140**. This timer is of the pneumatic type of known construction and includes a dashpot **151**, the plunger of which carries a delay switch **150**. The timer solenoid plunger is separate from the dashpot plunger, and actuation of the solenoid depresses the dashpot piston to close switch **150**. When the solenoid **148** is deenergized it retracts from the dashpot piston thus allowing the piston to slowly rise until the piston opens switch **150**. From lead **132'** a lead **150'** connects to switch **150**, and the lead **152** connects this switch to switch **143***a*, the latter switch in turn being connected by lead **153** to lead **145** to provide a holding circuit for relay **143**. Thus the closing of switch **150** energizes a holding circuit for solenoid **143**.

Relay **143** could be omitted, in which case lead **152** would be connected from switch **150** to lead **147** and lead **145** from switch **135***a* would go to switch **150**. However because of the damping action of the dashpot **151** there would be a slight lag upon closing switch **139** until switch **150** would close, and this lag might be sufficient to deenergize solenoid **125** under some conditions. For this reason it is preferred to employ the relay **143** so that closing of switch **139** immediately closes an operating circuit for relay **125**, and the closing of switch **150** energizes the holding circuit for relay **143**.

Upon opening switch **139** relay **135** is immediately deenergized to stop the flow of powder, and dashpot **151** is released. After the predetermined time interval for which the dashpot is set, switch **150** opens to deenergize relay **143** and thus deenergize relay **125**. However if within this time interval, while switch **150** is still closed, switch **139** is again closed, the energization of solenoid **148** prevents the opening of switch **150**, so that operation of the torch may be resumed. As previously noted when relay **125** is deenergized it requires operation of manual switch **123** to resume the starting cycle of the torch.

The operation now will be described. To start the operation, switch **117** is held closed. This actuates main relay **113** to close switch **113***b* to start the water pump. Flow switch **111** in the holding circuit of relay **113** is open until the pump has developed sufficient water flow, whereupon it closes, and switch **117** now can be released without deenergizing the main relay. The closing switch **113***a* closes the holding circuit of the main relay, and also energizes solenoid valve **105** to begin the flow of igniter gas.

Switch **123** is now manually closed to energize submaster relay **125**. This causes the following operations: Switch **125***b* energizes solenoid valve **72** to start the flow of oxygen, and energizes and starts timers **130** and **133**. Switch **125***a* energizes the holding circuit of the submaster relay including timer opened switch **129**. It should be noted that after about a thirty second interval timer **133** closes switch **137** just before timer **130** opens switch **129**.

Switch **139** is depressed by the operator immediately after he closes switch **123** and he holds switch **139** closed so that it is closed during the short time (about a half second at the end of the thirty second interval) when both switches **137** and **129** are in closed position. This starts the torch operation as follows:

Switch **139** energizes relay **135** and its switch **135***b* starts the powder feeder motor **64** to begin powder feed to the mixer. Switch **135***a* energizes relay **143**, which in turn closes switch **143***b* shunting manual switch **123**. Switch **139** energizes delay relay **148** to close switch **150** and complete a holding circuit for relay **143** through switch **143***a*. Timer switch **129** by now has opened, thus making submaster relay **125** responsive to switch **143***b*, and timer switch **137** has closed, so as to maintain torch switch **139** in a live circuit.

If the torch operator switch **139** is opened, relay **135** is deenergized immediately to stop the powder feed, and the deenergization of solenoid **148** releases the dashpot mechanism which, in a predetermined time, opens switch **150**. If, before the passage of this predetermined time torch operator switch **139** is again closed, a solenoid **148** is energized to prevent opening of switch **150** which would have caused deenergization of the submaster relay

and as relay **135** is energized, the powder feed is resumed. However, if the torch operator switch **139** remains open for the period to which dashpot **151** is set, the dashpot mechanism opens switch **150** to deenergize the holding relay **143** which opens switch **143***a* to deenergize the submaster relay **125** to open the oxygen valve circuit and reset the timers **130, 133,** so the opening of switch **137** prevents operation of the torch.

To shut down the whole apparatus, switch **116** is manually opened, thus deenergizing the main relay.

The functions of the control mechanism may be summarized as follows:

(A) To insure an adequate flow of cooling water at the start and during operation of the torch.

(B) To shut down operation of the torch if the cooling water becomes heated to an excessive temperature.

(C) To shut down operation of the torch if the oxygen pressure falls too low.

(D) To shut off the oxygen supply if the dust hopper pressure becomes excessive.

(E) To insure flow of igniter gas before operation of the torch is begun.

(F) To limit the duration of flow of oxygen if the powder flow is not started within a predetermined time after the flow of oxygen is begun.

(G) To limit the duration of flow of oxygen if the powder flow is interrupted.

(H) To permit interruption of powder flow and its resumption in a predetermined time after interruption.

We claim:

1. A control apparatus for a blow torch that burns metal powder, comprising: a conduit for carrying a mixture of oxygen and metal powder to a blow torch; a blow torch connected to said conduit to receive and burn said mixture; valve means for admitting oxygen into said conduit; means for feeding metal powder into said conduit; manually-actuated torch control means operative, after the oxygen valve means is opened, for starting and stopping said metal powder feeding means; and a first delay means operative, in response to the opening of said oxygen valve means, to prevent said torch control means from starting said metal powder feeding means until a first predetermined time period has elapsed after the opening of said oxygen valve means.

2. The apparatus of claim 1 including: a second delay means operative, at the end of a time lag period following the end of said first predetermined time period, to close said oxygen valve means; and intervening means operative, in response to the start of said metal powder feeding means during said time lag period, to render said second delay means inoperative.

3. The apparatus of claim 2 wherein: said second delay means also prevents said metal powder feeding means from starting after the end of said time lag period.

4. The apparatus of claim 3 including: a third delay means operative to close said oxygen valve means at the end of a third predetermined time period following the stopping of said metal powder feeding means.

5. The apparatus of claim 4 wherein: said intervening means is operative, in response to the starting of said metal powder feeding means during said third time period, to render said third delay means inoperative.

6. A control apparatus for a blow torch that burns metal powder, comprising: a conduit for carrying a mixture of oxygen and metal powder to a blow torch; a blow torch connected to said conduit to receive and burn said mixture; valve means for admitting oxygen into said conduit; means for feeding metal powder into said conduit; manually-actuated torch control means for starting and stopping said metal powder feeding means; and delay means operative at the end of a predetermined time period following the opening of said oxygen valve means, to close said valve means; and intervening means operative, in response to the start of said metal powder feeding means during said predetermined time period, to render said delay means inoperative.

7. A control apparatus for a blow torch that burns metal powder, comprising: a conduit for carrying a mixture of oxygen and metal powder to a blow torch; a blow torch connected to said conduit to receive and burn said mixture; valve means for admitting oxygen into said conduit; means for feeding metal powder into said conduit; manually-actuated torch control means for starting and stopping said metal powder feeding means; and delay means operative to close said oxygen valve means at the end of a predetermined time period following the stopping of said metal powder feeding means.

8. The apparatus of claim 7 wherein: said delay means is rendered inoperative, in response to the starting of said metal powder feeding means during said predetermined time period, to close said valve means.

9. In a blow torch for burning a metal powder fuel: a submaster relay having a plurality of holding circuits; a blow torch; an oxygen flow line having a valve therein controlled by said submaster relay for supplying oxygen to said blow torch; means for feeding metal powder to said oxygen flow line including an electrical control circuit controlled by a control switch located at said torch for starting and stopping said feed means; time delay means energized by energization of said submaster relay to open one of said holding circuits of the submaster relay after a predetermined time interval; a second time delay means energized by energization of said submaster relay to energize the circuit of said control switch after a second predetermined time interval, said first delay means having a lag period over the second delay means; and means operative by said control switch during said lag period to energize another holding circuit of said submaster relay to maintain said submaster relay energized upon opening of said one holding circuit.

10. An apparatus as specified in claim 9 wherein said means operated by said control switch during the lag period includes time delay means, operative when the control switch is in feed means stopping position to hold said last mentioned means in energized position for a predetermined time.

11. In a blow torch as specified in claim 9, a pump for supplying cooling water to the blow torch; a main relay having an actuating circuit including a starting switch; a main switch in the submaster relay actuating circuit actuated by the main relay; a holding circuit for said main relay including a main relay operated switch and a flow actuated switch held closed by a predetermined minimum flow of water through the pump.

12. A control apparatus for a metal powder burning blow torch comprising: a mixing chamber having an inlet for oxygen and an outlet for a mixture of oxygen and metal powder; a blow torch connected to said outlet to receive and burn said mixture; means for feeding metal powder through a powder inlet into the mixing chamber; a motor for operating said means; a submaster relay having an actuating circuit including a setting switch; a submaster switch actuated by the submaster relay; a first holding circuit for the submaster relay including a holding circuit switch actuated by the submaster relay and a delayed opening switch; a second holding circuit for the submaster relay shunted across the setting switch including a holding relay operated switch; a holding relay for operating said latter switch; a relay for said motor having an actuating circuit including said submaster switch, a delayed closing switch and a torch control switch; an operating circuit for said holding relay including a switch operated by said feeder motor relay; a delay holding circuit for said holding relay including a switch operated by said holding relay and a delay switch; delay means actuated by energization of the feeder motor relay for setting said delay switch; and delay means en-

ergized by closing of said submaster switch for actuating said delayed opening switch and delayed closing switch.

References Cited in the file of this patent

UNITED STATES PATENTS

1,264,581 Theberath ---------- Apr. 30, 1918
1,935,843 Yoebels ---------- Nov. 21, 1933
1,991,403 McManamna ---------- Feb. 19, 1935
2,448,745 Struckmann ---------- Sept. 7, 1948
2,454,325 Linnert ---------- Nov. 23, 1948
2,622,548 Chouinard et al. ---------- Dec. 23, 1952
2,748,845 Marshall et al. ---------- June 5, 1956