Dec. 23, 1952 W. A. UTTZ 2,622,729

FISHERMAN'S UTILITY TOOLBOX

Filed June 8, 1950 2 SHEETS—SHEET 1

FIG. 1.

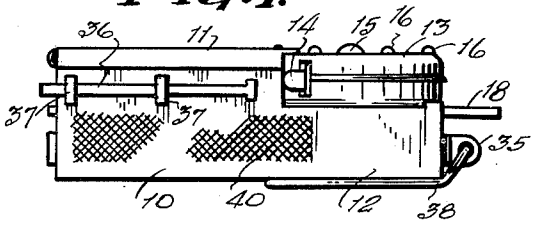

FIG. 4.

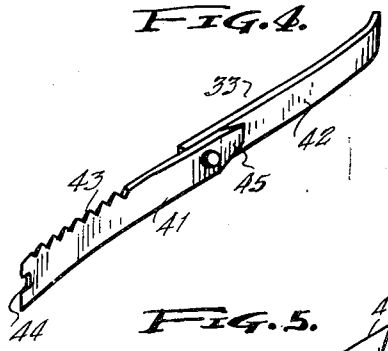

FIG. 2.

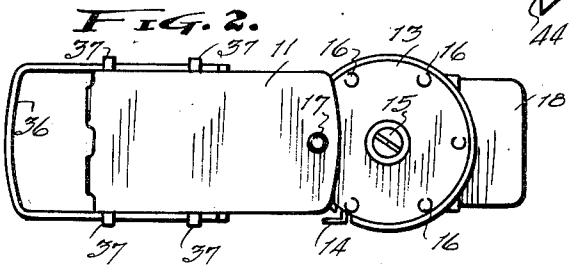

FIG. 5.

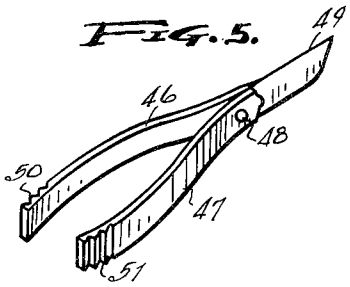

FIG. 3.

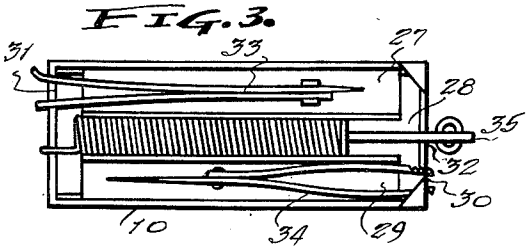

FIG. 6.

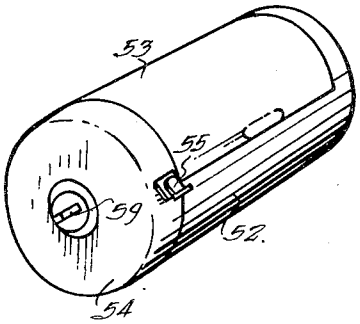

FIG. 7.

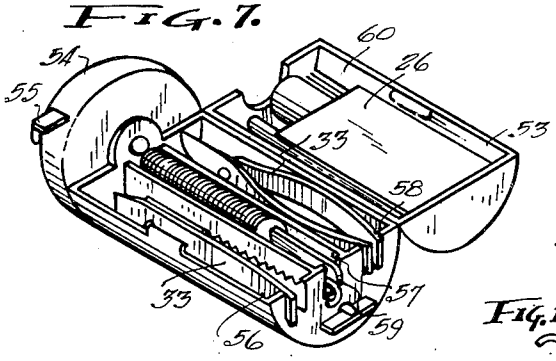

FIG. 8.

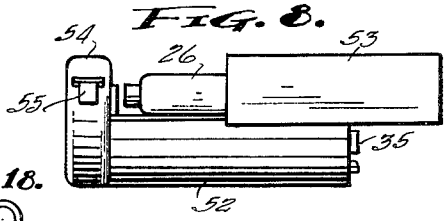

FIG. 18.

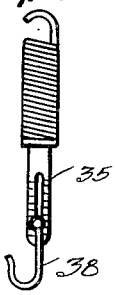

FIG. 9.

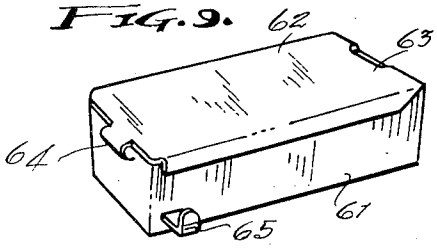

WILLIAM A. UTTZ
INVENTOR.

BY Cecil L. Wood

ATTORNEY

Dec. 23, 1952 W. A. UTTZ 2,622,729

FISHERMAN'S UTILITY TOOLBOX

Filed June 8, 1950 2 SHEETS—SHEET 2

FIG. 10.

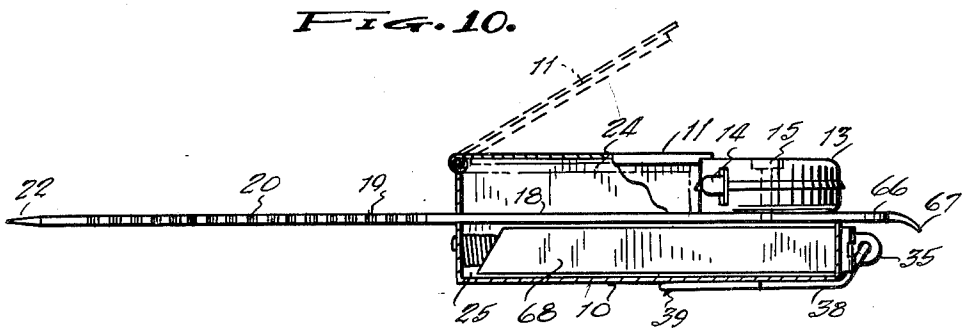

FIG. 11.

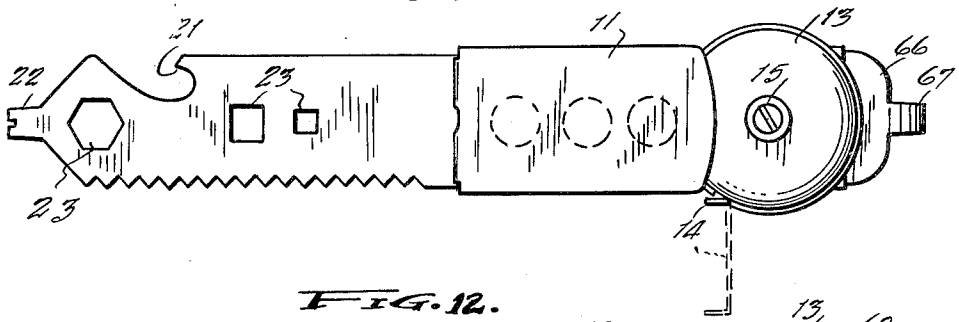

FIG. 12.

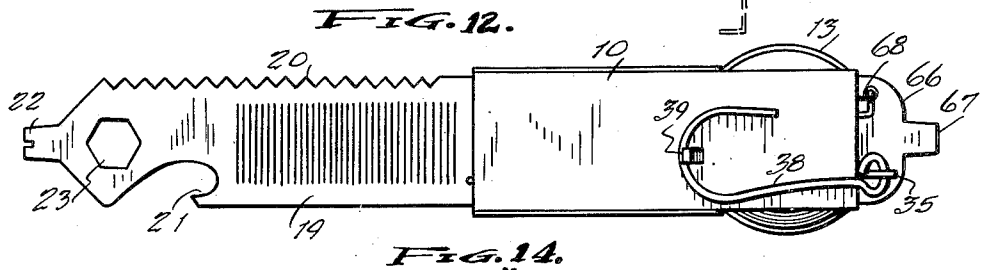

FIG. 13.

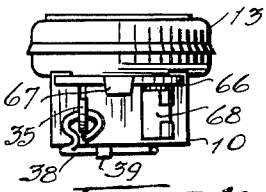

FIG. 14.

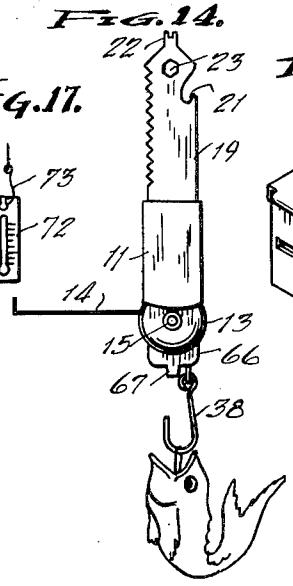

FIG. 15.

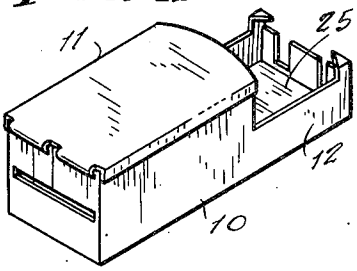

FIG. 17.

FIG. 16.

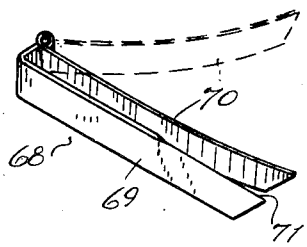

WILLIAM A. UTTZ
INVENTOR.

BY Cecil L. Ward

ATTORNEY

Patented Dec. 23, 1952

2,622,729

UNITED STATES PATENT OFFICE

2,622,729

FISHERMAN'S UTILITY TOOLBOX

William A. Uttz, Fort Worth, Tex.

Application June 8, 1950, Serial No. 166,884

4 Claims. (Cl. 206—16)

1

This invention relates to utility kits for fishermen, and other sportsmen, and it has particular reference to a compact unit in which is embodied a variety of different tools or instruments adapted for use of knives, pincers, screw drivers, and other purposes, and its principal object resides in the provision of a utilitarian article having characteristics adapting the same to be carried in a pocket or stored in a convenient location for ready use when any one of a variety of instruments contained in the unit are to be made use of, as when the device is employed as a part of a fishing kit, such instruments as measuring tape, scales, fish-cleaning blades, and the like, may be brought into use by the sportsman, as well as certain medical articles which may be compactly contained within the assembly.

Another object of the invention resides in the provision of a compact kit, containing a variety of different types of instruments, which is formed with a housing having a removable cover, and appurtenances by which a sportman can, in emergencies, accommodate different requirements without the necessity of carrying a variety of different types of instruments usually desirable when in isolated locations, such as at remotely situated lakes, streams, and the like.

This invention further comprehends the provision of an arrangement of parts which can be economically formed and assembled so that many different types of instruments required by a fisherman, for example, can be afforded at a minimum of cost while reducing the bulk of the assembly to a relatively small and compact form and maintaining the various instruments in a single package for ready availability.

Broadly, it is contemplated that the invention be so formed as to compactly include features of design and construction which will meet most of the essential requirements of sportsmen, particularly fishermen, for the numerous small instruments desirable on such expeditions, including small quantities of emergency medical supplies, and the like, while also affording such desirable instruments as measuring tapes, scales, thermometer, and other similar items.

While the foregoing objects are paramount, other and lesser objects will become manifest as the description proceeds, taken in connection with the appended drawings wherein:

Figure 1 is a side elevational view of the preferred form of the invention, illustrating the compactness thereof.

Figure 2 is a top plan view of the invention, showing the cylindrical housing for an extensible

2

tape measure, and the extensible handle for the device.

Figure 3 is a form of the invention, in top plan view, showing the cover removed, and illustrating a scale and instrument stored therein.

Figure 4 is a perspective illustration of one of the compact implements designed to be housed within the invention.

Figure 5 is a perspective illustration of another instrument capable of being housed within the compact.

Figure 6 illustrates the invention in cylindrical form, showing the extensible tape housed on one end, and illustrating the manner in which a scale may be extensible concentrically of the tape housing.

Figure 7 is a perspective illustration of the form of the invention shown in Figure 6, showing the cover open and illustrating the several instruments contained within the housing.

Figure 8 is a side elevational view of the form of the invention shown in Figures 6 and 7, the slidable cover being shown partially open and illustrating the contents of the housing.

Figure 9 is a perspective view of yet another modified form of the housing.

Figure 10 illustrates another form of the invention, the housing being illustrated partially in longitudinal section, and showing a blade extending from one end of the housing having serrations thereon.

Figure 11 is a plan view of the device illustrated in Figure 10, showing the form of the extended blade, the housing cover, and the casing for the extensible tape associated with the housing.

Figure 12 is an inverted plan view of the device shown in Figures 10 and 11, and illustrating the scale hook attached to the underside of the housing.

Figure 13 is a rear end elevational view of the device.

Figure 14 shows the invention in operative position.

Figure 15 is a perspective view of the housing for the device illustrated in Figures 10, 11 and 12.

Figure 16 is a perspective view of another of the instruments capable of being stored within the housing of the device.

Figure 17 illustrates the use of a thermometer which may be compactly housed within the device, and

Figure 18 illustrates a type of scale employed within the housing of the invention and extensible therefrom.

In its preferred form, illustrated in Figures 1 and 2, the invention comprises a housing 10 which is substantially rectangular in form and has a hinged cover 11. The housing 10 has a portion 12 extended rearwardly providing a base for a cylindrical casing 13 for an extensible measuring tape 14, as illustrated in Figures 1 and 2, and the housing 13 has a central pivot 15 by which it is attached to the casing 10 so that the member 13 can be rotatably adjusted on the base 12, a series of bosses 16 being arranged around the perimeter of the top of the casing 13, registering with an embossment 17 in the cover 11, providing for fixed rotative adjustments of the casing 13 with respect to its base 12.

A blade 18 is arranged through the housing 10, and the top of the base 12, so that it may be slidably extended from the housing 10, opposite the base 12, to provide a tool such as that illustrated in Figures 10, 11 and 12. The blade 18 is serrated along one edge 19 to define teeth 20, as shown in Figures 10, 11 and 12, and may be provided with conformations on its outer end such as the bottle cap remover 21 and a fish-hook ejector 22, and a plurality of apertures 23 providing for wrenches, and the like. The blade 18 separates the housing 10 into upper and lower compartments 24 and 25, the upper compartment, on which the cover 11 is arranged, providing for the storage of such items as medicaments, or the like, indicated as 26 in Figure 7. The lower compartment 25 is divided into a plurality of smaller receptacles 27, 28 and 29, as shown in Figure 3, and these compartments have communications 30, 31 and 32 at one end of the housing 10, as shown in Figure 3, to receive a variety of instruments as indicated at 33 and 34, and a scale assembly 35 shown in operative position in Figures 14 and 18.

The compact assembly illustrated in Figures 1 and 2 has a bail or handle 36, which is substantially U-shaped, as shown in Figure 2, and its legs are slidably secured in keepers on each side of the housing 10 so that the member 26 can be extended affording means whereby the device may be suspended from the user's belt, or providing means for handling the same. The scale assembly has a hook 38 connected to the stem 35 and is capable of being folded back against the bottom of the housing 10 and secured by an extended lug 39 formed therein so that the hook 38 can be released, when desired, and can depend from the assembly in the manner illustrated in Figures 17 and 18. Other features, such as the knurled portion 40 on one side of the housing 10, may be afforded for convenience in striking matches.

The instruments 33 and 34, illustrated particularly in Figures 4 and 5, may consist of longitudinally and pivotally joined members 41 and 42 which can be folded to the position shown in Figure 3 and stored in the compartment 27. The portion 41 of the member 33 may be provided with serrations 43, on one edge, and a slot 44 in the end thereof affording means for conveniently removing fish hooks, and the like. The opposite member 42 may be of any desired form and provide an instrument for various purposes. The opposite end of the member 41 can be formed with a screw driver tip 45. However, it is contemplated that the instruments shown in Figures 4 and 5, and shown encased within the housing 10 in Figure 3, may be of any particular design since these instruments do not form a part of the invention.

The device illustrated in Figure 5 is also formed with two members 46 and 47, the latter being pivoted at 48 to the member 46. A cutting blade 49 can be formed on the outer end of the member 46 while on each of the opposite ends of the members 46 and 47 may be transversely fluted at 50 and 51 to afford a tensioned spreading device for application to the mouth of a fish, for example, in operations involving removing the hook therefrom.

In Figures 6, 7 and 8 is illustrated a modified form of the invention in which the housing 52 is cylindrical and has a hinged cover 53. On one end of the housing is attached a cylindrical casing 54 for a measuring tape 55. A plurality of compartments 56, 57 and 58 are formed in the lower portion of the housing 52 to accommodate the implements 33 and 34, previously described and illustrated in Figures 4 and 5, and the scale assembly which is arranged in the central compartment 57, as shown in Figure 7, and has its operating stem 59 extending from the end of the housing 52 opposite the casing 54. The upper portion or cover 53 defines a compartment 60 in which may be housed the medical articles 26, previously referred to. The cover 53 on the housing 52 may be slidably arranged, in the manner shown in Figure 8.

In Figure 9 is shown a modified form of the housing 10, of the device illustrated in Figures 1 and 2, having a body portion 61 and a cover 62, hinged at 63 to one end of the member 61 and having a latch 64 at the opposite end. An extensible measuring tape 65 may be arranged within the housing 61 and extended to one side thereof toward the latch 64, as shown in Figure 9.

A modified form of the invention is shown in Figures 10, 11 and 12 and this device includes a housing 10, with its cover 11 but embodies a blade 18 which is rigidly connected in the housing 10 and has its extended portion permanently projecting from the housing 10 from the forward end thereof and having a portion 56 projecting from the opposite end of the housing 10 and on the extremity of this member is a curved tip 67 which may be employed for such uses as prying off jar lids, and the like. This form of the device also includes upper and lower compartments 24 and 25 in which the instruments 33 and 34, and the scale assembly, are arranged. The cylindrical casing 13 has a tape 14 operatively contained therein and is arranged on the housing 10 rearwardly from the extended portion of the blade 18.

Among the several instruments capable of being stored within the housing 10, in the compartments 27 and 29, is a tool 68, shown in Figure 16, which comprises a pair of hingedly connected members 69 and 70, the member 69 having a sharpened portion 71 formed on its outer end to afford a knife. Also included among the several instruments enclosed in the housing 10 is a thermometer 72 which may be employed on the end of a hook 73 for testing the water temperatures when this is desirable.

It is apparent that the structures herein shown and described may be modified or changed, from time to itme, by persons skilled in the art without departing from the spirit and intent of the invention or the scope of the appended claims.

What is claimed is:

1. In a compact fishing tool, in combination, a casing having a removable cover and a plurality of compartments formed therein, a blade ar-

ranged in said casing and capable of being extended therefrom, serrations formed along one edge of said blade, a housing for a measuring tape arranged on said casing having a tape operatively contained therein, a scale operatively supported in one of the compartments in said casing, and a plurality of different instruments arranged in others of said compartments.

2. In a utility compact for fishermen, in combination, a casing having a plurality of compartments formed therein and a removable cover, a blade slidably arranged in said casing and capable of longitudinal extension therefrom to operative position, means associated with said casing having a measuring tape therein and extensible therefrom, a scale operatively arranged in one of the compartments of said casing, openings in the ends of said casing to certain of said compartments whereby to receive different instruments enclosed therein.

3. In a fisherman's compact utility tool, in combination with a casing having a plurality of separate compartments therein and a removable cover, a blade member arranged longitudinally through said casing, and extensible therefrom to operative position, a cylindrical housing supported on said casing having a measuring tape therein and extensible therefrom, a mounting for said tape housing adapting the same for rotation and

adjustment to different rotative positions, the said compartments in said casing being adapted to receive a plurality of different instruments capable of being removed from the ends of said casing.

4. In a fisherman's utility tool, in combination, a casing formed with upper and lower compartments, a blade arranged in said casing separating said compartments and extensible from said casing from one end thereof, a housing for a measuring tape arranged on one end of said casing and rotatably adjustable to different rotative positions, a plurality of receptacles formed in said lower compartment, each having a communication through one end of said casing providing means for receiving a variety of instruments removable therefrom.

WILLIAM A. UTTZ.

REFERENCES CITED

The following references are of record in the file of this patent:

UNITED STATES PATENTS

Number	Name	Date
1,388,187	Marble	Aug. 23, 1921
2,307,073	Powell	Jan. 5, 1943
2,413,082	Skaer	Dec. 24, 1946
2,501,270	Fleming	Mar. 21, 1950