(No Model.)

J. H. EVANS.

HOT AIR BLAST.

No. 590,612. Patented Sept. 28, 1897.

Fig. 1.

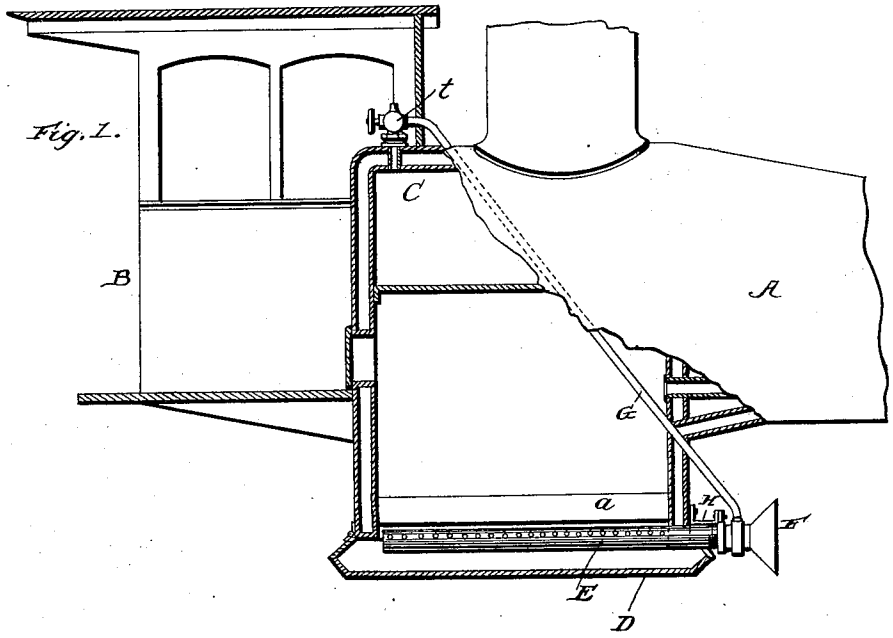

Fig. 2.

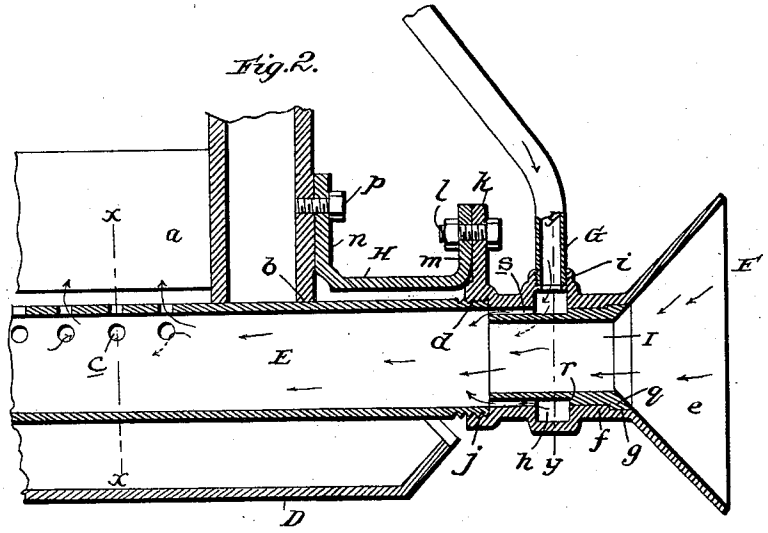

Fig. 4.

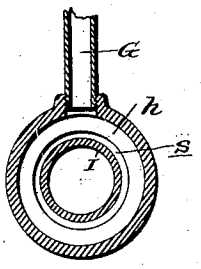

Fig. 3.

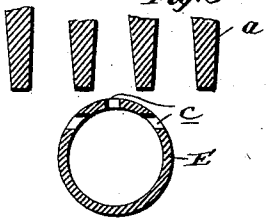

Witnesses:
C. H. Raeder
Jessie B. Feroney

Inventor
James H. Evans
By James Shelby
Attorney

THE NORRIS PETERS CO., PHOTO-LITHO., WASHINGTON, D. C.

UNITED STATES PATENT OFFICE.

JAMES H. EVANS, OF AMERICUS, GEORGIA.

HOT-AIR BLAST.

SPECIFICATION forming part of Letters Patent No. 590,612, dated September 28, 1897.

Application filed May 24, 1897. Serial No. 637,943. (No model.)

To all whom it may concern:

Be it known that I, JAMES H. EVANS, a citizen of the United States, residing at Americus, in the county of Sumter and State of Georgia, have invented certain new and useful Improvements in Hot-Air Blasts; and I do declare the following to be a full, clear, and exact description of the invention, such as will enable others skilled in the art to which it appertains to make and use the same.

This invention relates to improvements in devices for blowing hot air or steam into the ash-pans of locomotives or other engines, and the novelty and many advantages will appear from the following description and claims when taken in connection with the annexed drawings, in which—

Figure 1 is a view, partly in section and partly in elevation, of a locomotive-engine with my improvements applied. Fig. 2 is an enlarged sectional detail view of the ash-pan and the perforated pipe entering the same with the blowpipe broken away. Fig. 3 is a sectional view taken in the plane indicated by the dotted line *x x* on Fig. 2, and Fig. 4 is a sectional view taken in the plane indicated by the dotted line *y y* on same figure.

Referring by letter to the said drawings, A indicates a part of a locomotive, and B the cab thereof, neither of which form any part of my invention, but are here shown for the purpose of illustrating the application of my improvements to one type of boiler or furnace. I would have it understood that while my improvements are well adapted for connection to locomotives, yet such improvements can be equally as well and as cheaply applied to stationary engines.

The steam-reservoir C may be also of the ordinary or usual type as well as the ash-pan D.

E indicates a pipe which is disposed horizontally beneath the grate-bars *a* and takes through a suitable aperture *b* in the front wall of the furnace and extends well through the fire-chamber beneath the grate. This pipe is perforated transversely on its upper side throughout its length, as shown at *c*, and the perforations may be in rows, say three, more or less, and that portion of the pipe which extends out of the fire-chamber or ash-pit is imperforate and is screw-threaded at its outer end, as shown at *d*. This pipe E has secured to its outer end a bell-mouthed receiver F. This receiver, which has a flaring or bell mouth *e*, has a tubular stem or shank *f* and is provided in the throat with an annular recess *g*. The stem or tubular portion is also provided with an internal annular groove to form a steam-chamber *h*, and this steam-chamber is screw-tapped, as shown at *i*, to receive the threaded end of the blowpipe G, which leads from a steam-reservoir C. This stem or tubular portion is internally threaded at its inner end, as shown at *j*, to receive the threads on the outer end of the pipe E, and is also provided with a flange *k*, as shown. This flange is designed for attachment to the face of the furnace and is provided with one or more apertures to receive a bolt or bolts *l* and nuts or the like, and a bracket H is employed for connecting the receiver and perforated pipe to the furnace-wall. The bracket is here shown as of angular form, having a vertical branch *m*, with holes to register with the holes or apertures in the flange *k* and receive the bolts *l*. This bracket also has a vertical branch *n*, provided with holes to receive bolts *p* or other suitable fastening devices.

Within the tubular portion of the receiver F, I arrange a ring I, which extends from the throat back to or into the pipe E. This ring has an external flange *q* to fit in the recess *g* of the receiver and is reduced from the point *r* rearwardly, so as to remain free from contact with the tubular portion of the receiver, as shown, and together with said tubular portion form a steam-passage *s*. I provide the blowpipe G with a cock *t* for controlling the passage of steam from the reservoir C to the chamber *h*, and in locomotive-engines this cock may be placed at a convenient position within the cab, so as to be manipulated by the engineer. In operation it will be seen that as the steam-cock has been turned the steam as it is injected into the chamber *h* will be forced rearwardly through the circular passage *s*. This drawing in the air through the bell-mouthed receiver will cause such air to take up considerable moisture from the steam, so that both the air and steam in the

nature of a hot blast will be discharged through the holes in the pipe E in a mingled condition.

From the foregoing description the operation of my invention will be obvious, and among the advantages might be mentioned a great saving in fuel, a prevention of excessive burning of the grate-bars, as well as a preventive of the fire from falling out of the ash-pan, as it puts out all live coals as they fall through the grate, which is so very desirable in crossing trestles and bridges. The improvements also avoid the necessity of rocking the grate or using a rake in the fire, and to a great extent prevents the rising of very black smoke, which has been found so disagreeable to passengers. In use the dampers can be kept perfectly tight, and the cheapest coal can be used as a fuel.

While I have shown and described the pipe E as perforated, yet in some cases it is not necessary to perforate this pipe, as a very short pipe can be used, extending but a few inches within the ash-pan. Of course the length may be carried out according to the dictation of the mechanic. I would also have it understood that my improvements can be applied so as to enter either the front, back, or side of the ash-pan.

Having thus described my invention, what I claim is—

1. The combination with a steam-reservoir, and the fire-chamber of a furnace; of the perforated pipe arranged in said chamber below the grate-bars and having its outer end threaded, the bell-mouthed receiver having the tubular portion threaded at its inner end to receive said pipe and also having the attaching-flange, and the internal annular groove to form a steam-chamber, the ring arranged in the tubular portion of the receiver, and reduced externally as shown, so as to form the steam-passage, the blowpipe connecting said steam-chamber with the steam-reservoir, and the bracket connecting the receiver with the furnace, substantially as specified.

2. In a device of the character described, the combination with the perforated pipe threaded at its outer end; of the bell-mouthed receiver having the annular groove or recess to form the steam-chamber, the ring arranged in the tubular portion of the receiver and forming one wall of the circular steam-passage, and a blowpipe adapted to be connected to the steam-chamber, substantially as specified.

In testimony whereof I affix my signature in presence of two witnesses.

JAMES H. EVANS.

Witnesses:
J. B. DUNN,
T. A. GRAHAM.