PCT WORLD INTELLECTUAL PROPERTY ORGANIZATION
International Bureau

INTERNATIONAL APPLICATION PUBLISHED UNDER THE PATENT COOPERATION TREATY (PCT)

(51) International Patent Classification 6 : H05B 37/00 | A1

(11) International Publication Number: WO 97/40649

(43) International Publication Date: 30 October 1997 (30.10.97)

(21) International Application Number: PCT/US97/05856

(22) International Filing Date: 10 April 1997 (10.04.97)

(30) Priority Data:
08/636,647 23 April 1996 (23.04.96) US

(71) Applicant: ELECTRONIC LIGHTING INCORPORATED [US/US]; 37200 Central Court, Newark, CA 94560 (US).

(72) Inventors: SHANNON, John, R.; 196 Palisades, Daly City, CA 94015 (US). DIXON, Jeffrey, Michael; 37343 Sequoia Road, Fremont, CA 94536 (US). NOTOHAMIPRODJO, Hubertus; 4431 Pomponi Street, Union City, CA 94587 (US).

(74) Agent: PETERSON, James, W.; Burns, Doane, Swecker & Mathis, L.L.P., P.O. Box 1404, Alexandria, VA 22313-1404 (US).

(81) Designated States: CA, JP, European patent (AT, BE, CH, DE, DK, ES, FI, FR, GB, GR, IE, IT, LU, MC, NL, PT, SE).

Published
With international search report.

(54) Title: APPARATUS FOR SUPPLYING POWER FROM A BALLAST CIRCUIT TO AN AUXILIARY LOAD

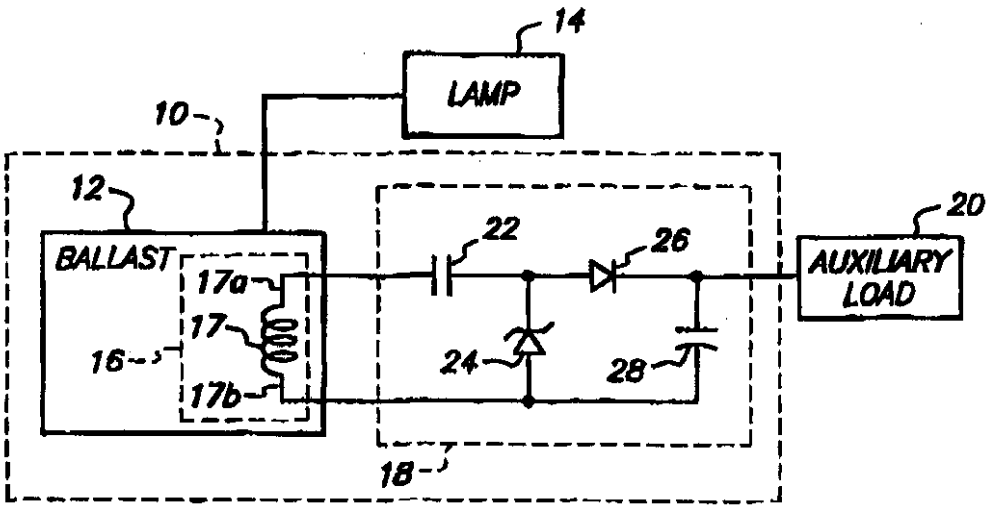

(57) Abstract

The present invention is directed to a power supply circuit (10) for controlling a load which, for example, includes both a gas-discharge lamp (14) and an auxiliary load (20). The power supply circuit (10) includes a ballast circuit (12) for limiting current supplied to the gas discharge lamp (14). The auxiliary load (20), such as an occupancy sensor, is connected to receive an alternating current signal from a transformer winding (17), inductor coil, or other suitable portion of the ballast circuit (12). The power supply circuit (10) includes a rectifier (18) for rectifying the alternating current signal to provide a stable, low-voltage direct current signal to drive the auxiliary load (20).

FOR THE PURPOSES OF INFORMATION ONLY

Codes used to identify States party to the PCT on the front pages of pamphlets publishing international applications under the PC

AL	Albania	ES	Spain	LS	Lesotho	SI	Slovenia
AM	Armenia	FI	Finland	LT	Lithuania	SK	Slovakia
AT	Austria	FR	France	LU	Luxembourg	SN	Senegal
AU	Australia	GA	Gabon	LV	Latvia	SZ	Swaziland
AZ	Azerbaijan	GB	United Kingdom	MC	Monaco	TD	Chad
BA	Bosnia and Herzegovina	GE	Georgia	MD	Republic of Moldova	TG	Togo
BB	Barbados	GH	Ghana	MG	Madagascar	TJ	Tajikistan
BE	Belgium	GN	Guinea	MK	The former Yugoslav Republic of Macedonia	TM	Turkmenistan
BF	Burkina Faso	GR	Greece			TR	Turkey
BG	Bulgaria	HU	Hungary	ML	Mali	TT	Trinidad and Tobago
BJ	Benin	IE	Ireland	MN	Mongolia	UA	Ukraine
BR	Brazil	IL	Israel	MR	Mauritania	UG	Uganda
BY	Belarus	IS	Iceland	MW	Malawi	US	United States of America
CA	Canada	IT	Italy	MX	Mexico	UZ	Uzbekistan
CF	Central African Republic	JP	Japan	NE	Niger	VN	Viet Nam
CG	Congo	KE	Kenya	NL	Netherlands	YU	Yugoslavia
CH	Switzerland	KG	Kyrgyzstan	NO	Norway	ZW	Zimbabwe
CI	Côte d'Ivoire	KP	Democratic People's Republic of Korea	NZ	New Zealand		
CM	Cameroon			PL	Poland		
CN	China	KR	Republic of Korea	PT	Portugal		
CU	Cuba	KZ	Kazakstan	RO	Romania		
CZ	Czech Republic	LC	Saint Lucia	RU	Russian Federation		
DE	Germany	LI	Liechtenstein	SD	Sudan		
DK	Denmark	LK	Sri Lanka	SE	Sweden		
EE	Estonia	LR	Liberia	SG	Singapore		

APPARATUS FOR SUPPLYING POWER FROM A BALLAST CIRCUIT TO AN AUXILIARY LOAD

BACKGROUND OF THE INVENTION

Field of the Invention

The present invention relates generally to power supplies. More particularly, the present invention relates to an apparatus for supplying power to a negative resistance load which includes an additional auxiliary load.

State of the Art

To control the current drawn by a load, a variety of AC power control circuits have been developed. Typical AC power control circuits seek to ensure that the load draws a current which is substantially sinusoidal and in phase with an AC supply voltage. Such circuits have a wide variety of applications, including their use with a dimming ballast to control a gas-discharge lamp.

Gas-discharge lamps generate light when an electric current passes through the gas contained within the lamp. Gas-discharge lamps have a negative resistance (that is, a resistance which decreases as the current increases), and are typically provided with a power control circuit for maintaining AC current supplied to the lamp substantially sinusoidal and in phase with the AC supply voltage. As is known in the art, a high-frequency current generates light more efficiently than the 60 Hz frequency of a standard AC supply voltage.

It is known to use devices, such as photo sensors or slide dimmers, in conjunction with a lamp to regulate light output from the lamp. However, these devices are variable resistance devices which are not continuously driven by a power supply, but rather respond to some external influence to produce a change in resistance for regulating lamp output. In other words, these devices do not require a continuous, stable power supply to provide their intended function. Further, such devices are typically connected with a dimming interface of the ballast circuit which is unstable and which does not provide a large current. These devices must therefore be low-current devices.

In addition to the devices described above, conventional lighting control systems frequently include an occupancy sensor to detect the presence of a person in a room or area, and thus the necessity of initiating or maintaining operation of a lamp. However, auxiliary devices, such as occupancy sensors, require a stable current of higher magnitude than that associated with the devices described above, and therefore are provided with a separate power source. Because the dimming interface is unstable, it is unsuitable for driving auxiliary loads, such as occupancy sensors, which are used in conjunction with a lamp control system and which must be actively driven by a power supply. This requirement for a separate power supply limits the potential locations of the occupancy sensor due, for example, to the size of the power supply. Auxiliary devices having a separate power supply also require complex installation which involves having an electrician connect the auxiliary device with the ballast.

It would therefore be desirable to provide a power supply capable of supplying stable, low-voltage direct current sufficient to drive an auxiliary device, such as an occupancy sensor, such that auxiliary functions can be easily implemented without the need for an electrician.

SUMMARY OF THE INVENTION

The present invention is directed to a power supply circuit for controlling a load which, for example, includes both a gas-discharge lamp and an auxiliary load. The power supply circuit includes a ballast circuit for limiting current supplied to the gas discharge lamp. The auxiliary load, such as an occupancy sensor, is connected to receive an alternating current signal from a transformer winding, inductor coil, or other suitable portion of the ballast circuit. The power supply circuit includes a rectifier for rectifying the alternating current signal to provide a stable, low-voltage direct current signal to drive the auxiliary load.

According to one embodiment of the invention, the power supply circuit includes means, such as a circuit, for limiting current supplied to a negative resistance load. The current limiting means includes a first

alternating current supply portion. The power supply circuit further includes means, such as a second current supply portion, for receiving an alternating current from the first alternating current supply portion and supplying a direct current to an auxiliary load.

By supplying a stable low-voltage direct current signal from the ballast, it is possible to actively drive many types of auxiliary devices such as occupancy sensors, infra-red or radio frequency (RF) remote control receivers, control devices for prioritizing local and global lighting control signals, and other relatively high current devices which could not previously be driven without the use of a separate dedicated power supply.

BRIEF DESCRIPTION OF THE DRAWINGS

The present invention can be further understood with reference to the following description and the appended drawings, wherein like elements are provided with the same reference numerals. In the drawings:

FIG. 1 is a schematic diagram of a power supply circuit according to one embodiment of the present invention.

DETAILED DESCRIPTION OF THE PREFERRED EMBODIMENTS

Referring to FIG. 1, a schematic diagram of a power supply circuit according to an exemplary embodiment of the present invention is shown. The power supply circuit 10 includes a ballast circuit 12 for controlling the current supplied to a lamp 14. The ballast circuit 12 is a conventional ballast circuit which includes a first supply portion 16 suitable for supplying a stable AC voltage signal. In the embodiment shown in FIG. 1, the first supply portion 16 includes an inductor coil 17 in the output electro-magnetic structure of the ballast circuit. The inductor coil 17 could alternately be a section of a transformer winding of the output electro-magnetic structure, or other portion capable of supplying a relatively stable AC signal, suitable for driving the desired auxiliary device. The coil 17 can be any winding which is electrically isolated from the ballast input power supply and from the lamp winding.

The circuit 10 also includes a second supply portion 18 for supplying power to an auxiliary load 20. The second supply portion 18 is connected between first and second connection points 17a, 17b of the supply portion 16 and the auxiliary load 20. The second supply portion 18 rectifies the high-frequency alternating current signal received from the coil of the first supply portion to provide a low-voltage direct current signal to the auxiliary load 20.

It will be appreciated that first capacitance 22 provides a limiting impedance for short-circuit currents, and as a result, the second supply portion is not susceptible to short-circuit. That is, if a short-circuit or fault occurs in the second supply portion or in the auxiliary load, the ballast remains operational. Further, a network of lamp ballasts can be connected in parallel, such that failure of one lamp ballast, and therefore its associated power circuit, does not affect the operation of the remaining lamp ballasts and auxiliary circuits.

The second supply portion 18 includes a first capacitance 22 connected at a first terminal to first connection point 17a of the first supply portion 16. A zener diode 24 is connected in series between second connection point 17b of the first supply portion 16 and a second terminal of first capacitance 22. A diode 26 is connected in a forward-conducting direction, in series between the second terminal of first capacitance 22 and an input to the auxiliary load 20. Finally, a second capacitance 28 is connected between the second connection point 17b of supply portion 16 and the input to auxiliary load 20.

In operation, the zener diode 24 and diode 26 rectify the high-frequency alternating current signal from the first supply portion 16. Specifically, when the voltage differential between first connection point 17a and second connection point 17b is positive, current flows through first capacitance 22 and diode 26 into auxiliary load 20 and into second capacitance 28. This current flow causes charge to be stored in first capacitance 22 and in second capacitance 28. When the voltage differential between first connection point 17a and second connection point 17b is negative, the current flow reverses. The charge stored in second capacitance 28 is discharged to supply a direct current

signal to the input of auxiliary load 20. The charge on first capacitance 22 is also discharged during this time. Zener diode 24 regulates the voltage supplied to the auxiliary load 20. It will be appreciated that the second supply portion 18 can include a rectifier circuit for rectifying the AC input signal to generate a DC output signal. Other suitable components and rectifier arrangements readily apparent to those skilled in the art can, of course, be used to provide a desired power input to auxiliary load 20.

According to an exemplary embodiment of the present invention, first capacitance 22 is a .015 microfarad capacitor rated for 100 volts, and second capacitance 28 is a 22 microfarad capacitor rated for 50 volts. Zener diode 24 is a IN4743A zener diode, and diode 26 is a IN4148 diode. It will be appreciated that alternate values can be used to provide a desired power input to a particular auxiliary device 20. The high-frequency AC signal received from first supply portion 16 is in an exemplary embodiment, approximately 15 volts AC at approximately 38-50 kHz, and the output signal supplied to the auxiliary load 20 is approximately 12 volts and approximately 20 mA. It will be appreciated that other output values can be provided depending upon the auxiliary load to be driven.

Auxiliary load 20 can be an occupancy sensor for determining motion in a room or other area to be illuminated. Alternately, auxiliary load 20 can be a remote control receiver for receiving a wireless control signal, such as an infrared or RF remote control signal, to control lamp operation. Auxiliary load 20 can also be a processor or other control device capable of receiving, prioritizing, and executing control signals received from, for example, a local control signal source used to control an individual lamp or small group of lamps and/or a global control signal source used to control a large collection of lamps. It will be appreciated that many other auxiliary loads can be driven by the power supply circuit of the present invention.

It will be appreciated by those skilled in the art that the present invention can be embodied in other specific forms without departing from the spirit or essential characteristics thereof. The presently disclosed

embodiments are therefore considered in all respects to be illustrative and not restricted. The scope of the invention is indicated by the appended claims rather than the foregoing description and all changes that come within the meaning and range and equivalence thereof are intended to be embraced therein.

WHAT IS CLAIMED IS:

1. A power supply circuit for supplying power to a negative resistance load, comprising:

a circuit for limiting current supplied to the negative resistance load, the circuit including a first alternating current supply portion; and

a second supply portion for receiving an alternating current from the first alternating current supply portion and supplying a direct current to an auxiliary load.

2. The power supply circuit of claim 1, wherein the load is a gas-discharge lamp and the auxiliary load is an occupancy sensor.

3. The power supply circuit of claim 1, wherein the second supply portion further includes:

a first capacitance having a first terminal connected to the first alternating current supply portion;

a zener diode connected in series between the first alternating current supply portion and a second terminal of the first capacitance;

a diode connected in series between the second terminal and an input to the auxiliary load; and

a second capacitance connected between supply portion and the input to the auxiliary load.

4. The power supply circuit of claim 1, wherein the second supply portion is a rectifier for rectifying the alternating current to generate the direct current.

5. The power supply circuit of claim 3, wherein the first capacitance is approximately .015 microfarads.

6. The power supply circuit of claim 3, wherein the zener diode is a IN4743A zener diode.

7. The power supply circuit of claim 3, wherein the diode is a IN4148 diode.

8. The power supply circuit of claim 3, wherein the second capacitance is approximately 22 microfarads.

9. The power supply circuit of claim 1, wherein the direct current is a direct current signal of approximately 12 volts.

10. The power supply circuit of claim 1, wherein the direct current is a direct current signal of approximately 20 milliamps.

11. The power supply circuit of claim 1, wherein the auxiliary load is a receiver for receiving a wireless control signal.

12. A power supply circuit for supplying power to a negative resistance load, comprising:

means for limiting current supplied to the negative resistance load, the current limiting means including a first alternating current supply portion; and

means for receiving an alternating current from the first alternating current supply portion and supplying a direct current to an auxiliary load.

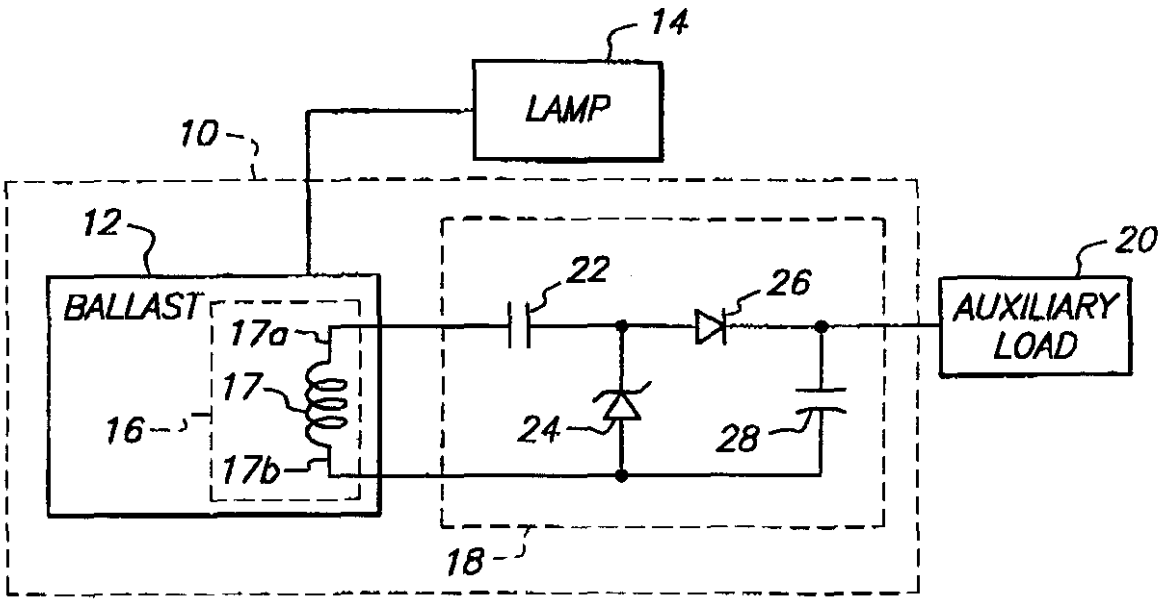
14
LAMP
10
12
BALLAST
17a
17
16
17b
22
26
24
28
18
20
AUXILIARY LOAD

FIG. 1

INTERNATIONAL SEARCH REPORT

International application No.
PCT/US97/05856

A. CLASSIFICATION OF SUBJECT MATTER

IPC(6) :H05B 37/00
US CL : 315/205, 246, 200R, 276, 208, 156
According to International Patent Classification (IPC) or to both national classification and IPC

B. FIELDS SEARCHED

Minimum documentation searched (classification system followed by classification symbols)

U.S. : 315/205, 246, 200R, 276, 208, 156, 283, 244, 272, 261, 171

Documentation searched other than minimum documentation to the extent that such documents are included in the fields searched

Electronic data base consulted during the international search (name of data base and, where practicable, search terms used)

C. DOCUMENTS CONSIDERED TO BE RELEVANT

Category*	Citation of document, with indication, where appropriate, of the relevant passages	Relevant to claim No.
X ---- Y	US 5,327,048 A (TROY) 05 July 1994 (05/07/94), see Figures 1 and 2, especially column 6, lines 48 and 49.	1, 2, 4, 11, 12 ---------- 9, 10
A	US 4,441,053 A (DASPIT) 03 April 1984 (03/04/84), see Figure 1.	1-12
A	US 4,888,527 A (LINDBERG) 12 December 1989 (12/12/89), see Figure 3.	2

☐ Further documents are listed in the continuation of Box C. ☐ See patent family annex.

*	Special categories of cited documents:	"T"	later document published after the international filing date or priority date and not in conflict with the application but cited to understand the principle or theory underlying the invention
"A"	document defining the general state of the art which is not considered to be of particular relevance	"X"	document of particular relevance; the claimed invention cannot be considered novel or cannot be considered to involve an inventive step when the document is taken alone
"E"	earlier document published on or after the international filing date	"Y"	document of particular relevance; the claimed invention cannot be considered to involve an inventive step when the document is combined with one or more other such documents, such combination being obvious to a person skilled in the art
"L"	document which may throw doubts on priority claim(s) or which is cited to establish the publication date of another citation or other special reason (as specified)	"&"	document member of the same patent family
"O"	document referring to an oral disclosure, use, exhibition or other means		
"P"	document published prior to the international filing date but later than the priority date claimed		

Date of the actual completion of the international search 07 JULY 1997	Date of mailing of the international search report 25 JUL 1997
Name and mailing address of the ISA/US Commissioner of Patents and Trademarks Box PCT Washington, D.C. 20231 Facsimile No. (703) 305-3230	Authorized officer HAISSA PHILOGENE Telephone No. (703) 305-3485

Form PCT/ISA/210 (second sheet)(July 1992)*

HKP9921087

从镇流电路向辅助负载输送电能的装置

(57)摘要

本发明涉及一种用以控制负载的电源电路(10)，这种负载例如包括气体放电灯(14)和辅助负载(20)。电源电路(10)包括镇流电路(12)，用以限制输送给气体放电灯(14)的电流。诸如占有率器等的辅助负载(20)连接成接受来自镇流电路(12)的变压器绕组(17)、电感线圈或其它适当部分的交流信号。电流电路(10)包括整流器(18)，用以整流交流信号，提供稳定的低压直流信号，驱动辅助负载(20)。

