March 4, 1930. J. STERBA 1,749,721

CARBURETOR

Filed Aug. 13, 1928 2 Sheets-Sheet 1

Fig. 1.

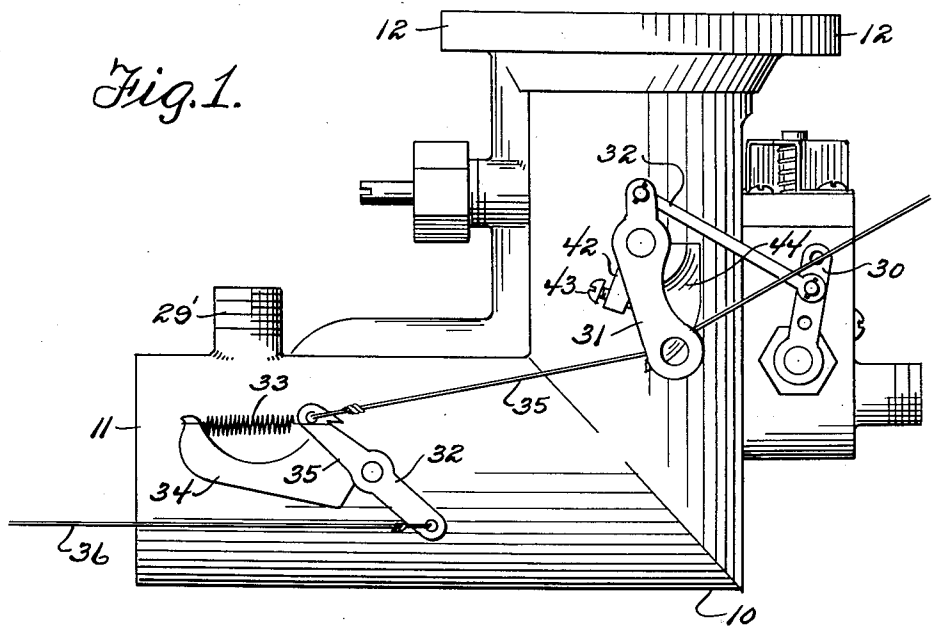

Fig. 5.

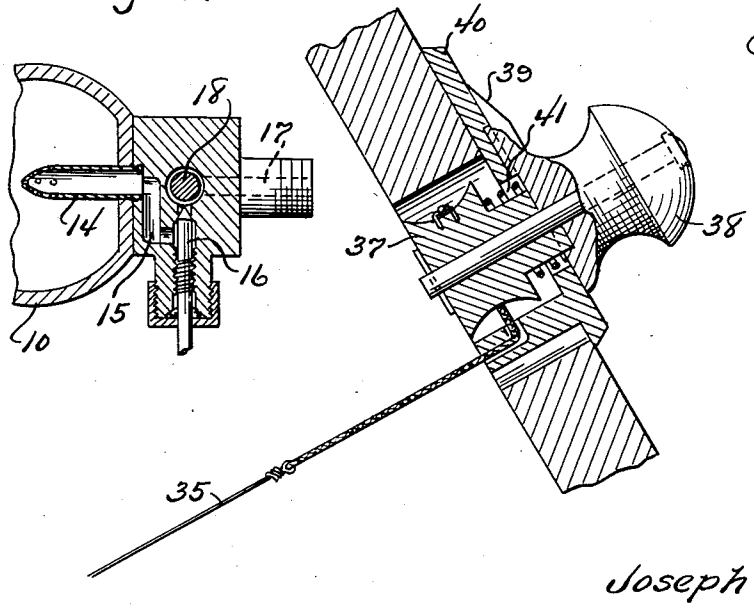

Fig. 3.

Joseph Sterba
INVENTOR

BY Victor J. Evans
ATTORNEY

March 4, 1930. J. STERBA 1,749,721

CARBURETOR

Filed Aug. 13, 1928 2 Sheets-Sheet 2

Fig. 2.

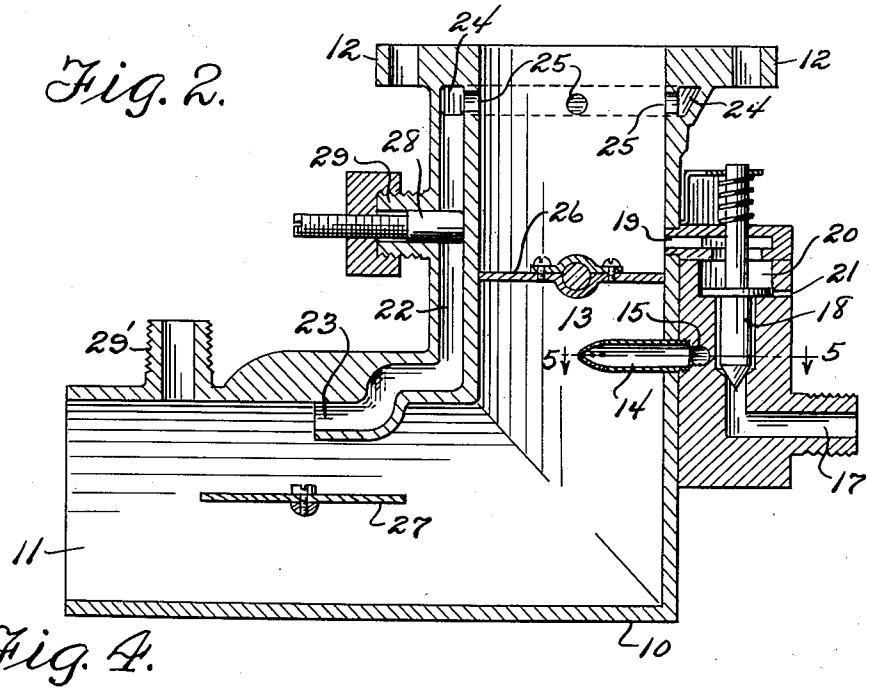

Fig. 4.

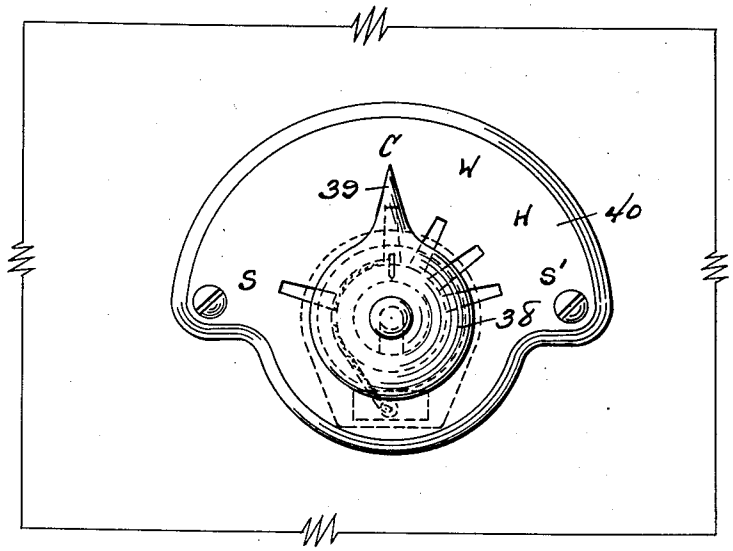

Joseph Sterba
INVENTOR

BY Victor J. Evans
ATTORNEY

Patented Mar. 4, 1930 1,749,721

UNITED STATES PATENT OFFICE

JOSEPH STERBA, OF SOUTH PRAIRIE, WASHINGTON

CARBURETOR

Application filed August 13, 1928. Serial No. 299,344.

This invention relates to improvements in carburetors for internal combustion engines, and has for an object the provision of a carburetor which is simple in construction, efficient and reliable in use, and by means of which a fuel mixture may be provided that will materially reduce fuel consumption, and increase the efficiency of an engine to which it is applied.

Another object of the invention is the provision of a carburetor having an auxiliary air supply, by means of which air may be admitted to the mixing chamber of the carburetor between the throttle valve and the engine cylinders, together with means for regulating said auxiliary air supply and for utilizing the usual "choke" valve to cut off both the main and auxiliary air supply.

With the above and other objects in view, the invention further includes the following novel features and details of construction, to be hereinafter more fully described, illustrated in the accompanying drawings and pointed out in the appended claims.

In the drawings:—

Figure 1 is a side elevation of a carburetor constructed in accordance with the invention.

Figure 2 is a vertical longitudinal sectional view.

Figure 3 is a section illustrating a dash control for use with the carburetor.

Figure 4 is a plan view of the same.

Figure 5 is a sectional view on the line 5—5 of Figure 2.

Referring to the drawings in detail wherein like characters of reference denote corresponding parts, the reference character 10 indicates a casing which may be in the form of an elbow pipe as shown. This casing is open at opposite ends so that its outer end provides a main air intake pipe 11, while its inner end is adapted for connection with the intake manifold of an engine. For this purpose the inner end of the casing is provided with apertured lugs 12.

The inner end of the casing provides a mixing chamber 13 and extending into this chamber is a fuel supply nozzle 14 through which gasoline or other liquid fuel is supplied to the chamber 13 for mixture with air supplied through the air intake 11. The nozzle 14 receives liquid fuel through a passage 15 which is controlled by an adjustable needle valve 16. The passage 15 is in communication with a fuel passage 17 which may be connected with a suitable source of fuel supply. Communication between the passages 15 and 17 is controlled by a spring influenced valve 18 which is operated by suction from the engine, and for this purpose a port 19 is provided which communicates with a suction chamber 20. A relief port 21 is provided so as to prevent the formation of a vacuum.

Operation of the engine will lift the valve 18 from its seat so as to provide communication between the passages 15 and 17 as long as the engine is operating. The liquid fuel supply just described forms a part of the subject matter of a co-pending application filed August 16, 1929, Serial No. 299,999.

Extending through the casing 10 is an auxiliary air passage 22. One end of this passage opens into the main air intake 11 as shown at 23 while its opposite end is in communication with an annular passage 24 which surrounds the inner end of the casing. Ports 25 provide communication between this annular passage 24 and the mixing chamber between the inner end of the casing and a throttle valve 26.

Located within the main air intake is a choke valve 27 and this valve is arranged to control or close the main air intake and when in closed position will also close the outer end 23 of the auxiliary air passage 22.

The auxiliary air passage 22 is adjustably controlled through the medium of a valve 28. This last mentioned valve operates through a nipple 29 and may be threadedly adjusted to decrease or increase the amount of air passing through the passage 22.

In addition, the casing is provided with a nipple 29 which communicates with the air intake end of the carburetor and is adapted for connection with the crank case of an engine so that vapor from the crank case may be supplied to the carburetor for mixture with the air and liquid fuel.

The needle valve 16 is threadedly adjustable and in order to adjust this valve its

stem has connected thereto a rigid arm 30. The stem of the valve 26 has mounted thereon an arm 31 and one end of this arm is connected to the arm 30 by means of a link 32 so that the needle valve 16 and the throttle valve 26 may be simultaneously operated. The other end of the arm 31 may have suitable connection whereby the valve may be controlled.

Mounted upon the stem of the choke valve 27 is an arm 32. One end of this arm is connected by means of a spring 33 with a stationary member 34 and this member forms a stop 35 so that the valve 27 will be yieldingly held in fully open position. Connected to one end of the arm 32 is a flexible member or wire 35 which preferably leads to the instrument board of an automobile, while a wire or flexible member 36 which is connected to the other end of the arm 32 may lead to the front of the automobile so that the choke valve may be operated from this point.

Any suitable means may be provided for operating the wire 35, but it is preferred to have this wire connected with and wound upon a spool or drum 37. This spool or drum carries an operating knob 38 and the latter in turn carries a pointer 39. This pointer operates over a dial 40 which is secured to the instrument board and is yieldingly held in adjusted position by means of a spring 41. The dial 40 is provided with indicating marks S, C, W, H and S'. These marks indicate respectively start, cold, warm, hot and summer heat.

Rigid with the stem of the valve 26 is an arm 42 which carries an adjusting screw 43 and located in the path of this screw is a stop 44. By adjusting this screw, the closing position of the throttle valve 26 may be regulated and the idling speed of the engine thereby controlled.

The invention is susceptible of various changes in its form, proportions and minor details of construction and the right is herein reserved to make such changes as properly fall within the scope of the appended claims.

Having described the invention what is claimed is:

1. In a carburetor, a casing having a passage therethrough open at its outer end for the admission of air and defining a main air inlet, said casing having its inner end adapted for connection with the intake manifold of an engine, means to admit liquid fuel to said passage for mixture with air passing through the passage, a throttle valve to control the feed of said mixture to the engine, means within the casing to provide an auxiliary air passage having its outer end opening into the outer end of the casing and its inner end opening into the inner end of the casing and beyond the throttle valve, and a valve positioned to close both the main and auxiliary air passages.

2. In a carburetor, a casing having a passage therethrough open at its outer end for the admission of air and defining a main air inlet, said casing having its inner end adapted for connection with the intake manifold of an engine, means to admit liquid fuel to said passage for mixture with air passing through the passage, a throttle valve to control the feed of said mixture to the engine, means within the casing to provide an auxiliary air passage having its outer end opening into the outer end of the casing and its inner end opening into the inner end of the casing and beyond the throttle valve, a valve located within the auxiliary air passage to control the latter, and means to close the main and auxiliary air passages.

In testimony whereof I affix my signature.

JOSEPH STERBA.