July 10, 1934. F. A. HEILMAN 1,966,295

ROTARY VIBRATING RIVETER

Filed Oct. 28, 1932 2 Sheets-Sheet 1

Fig. 1

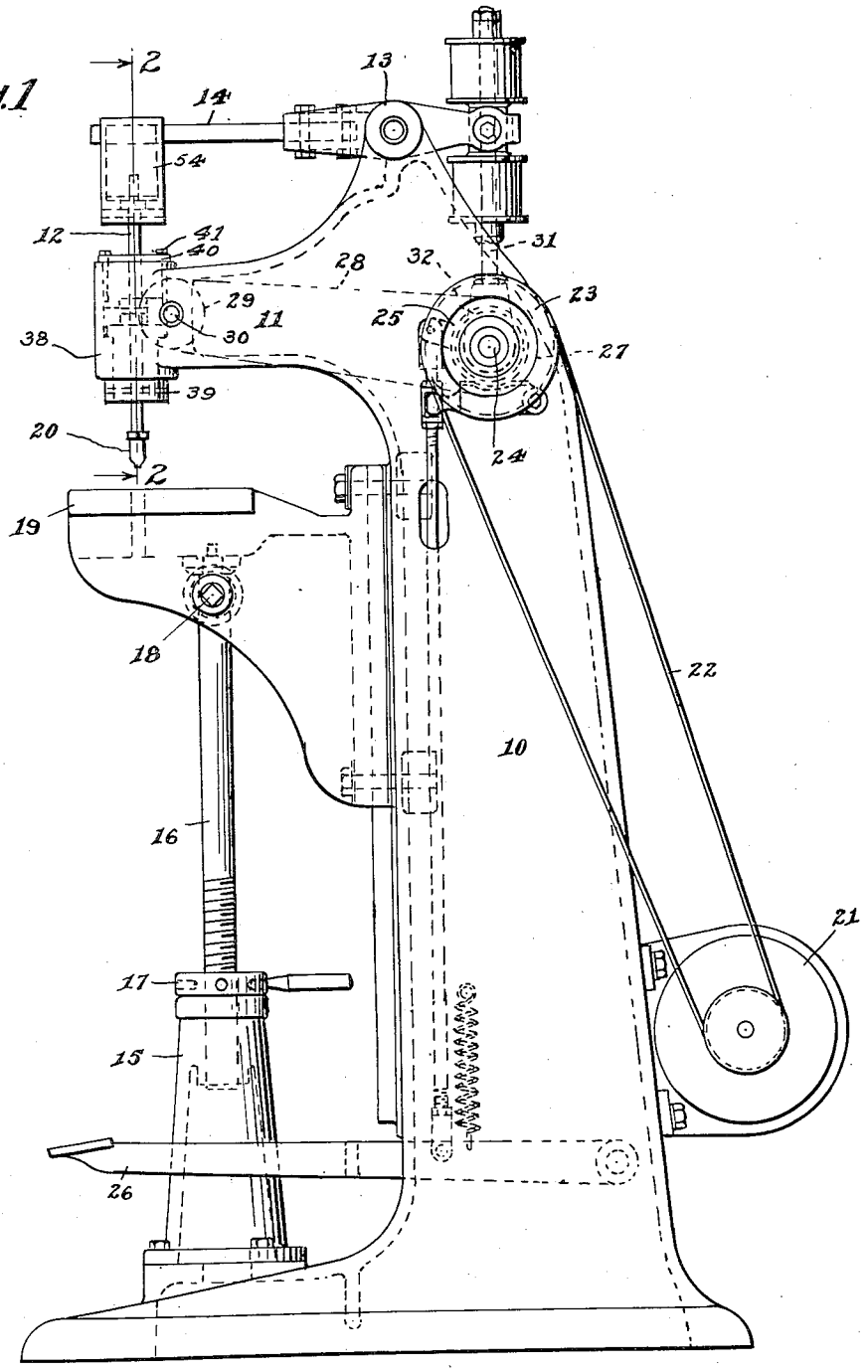

INVENTOR.
Frank A. Heilman
BY
Christian M. Newman
ATTORNEY

July 10, 1934. F. A. HEILMAN 1,966,295

ROTARY VIBRATING RIVETER

Filed Oct. 28, 1932 2 Sheets-Sheet 2

Fig. 2

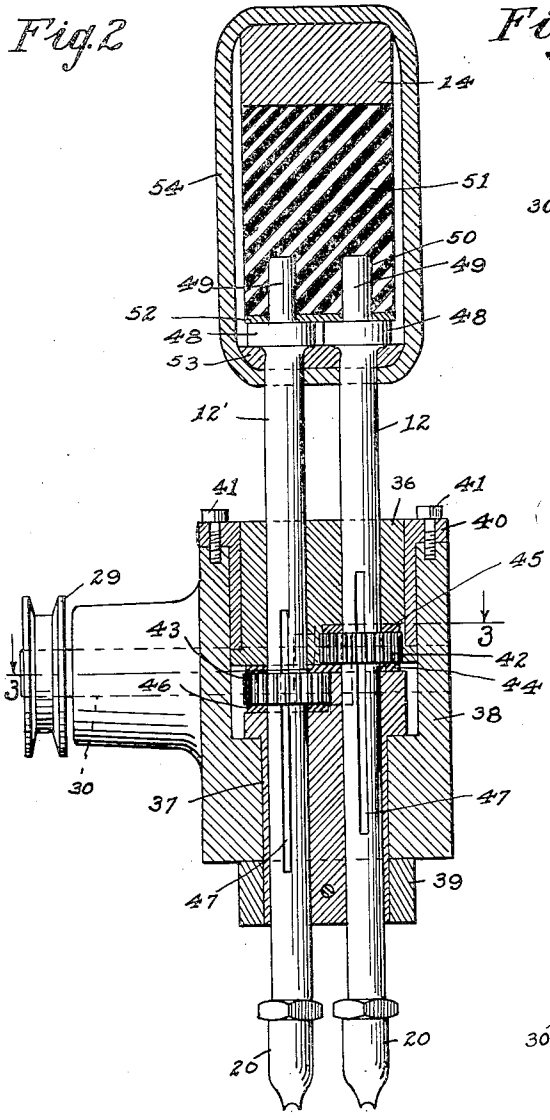

Fig. 4

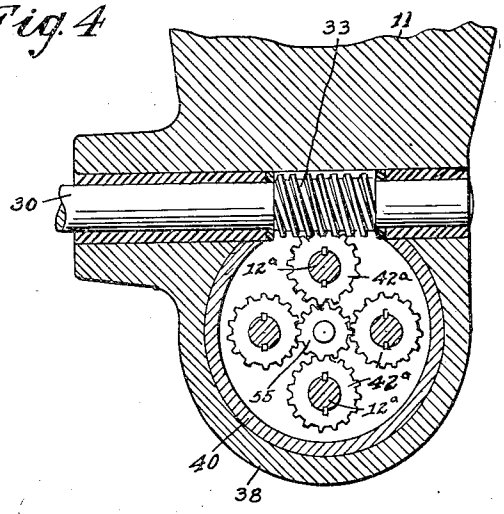

Fig. 3

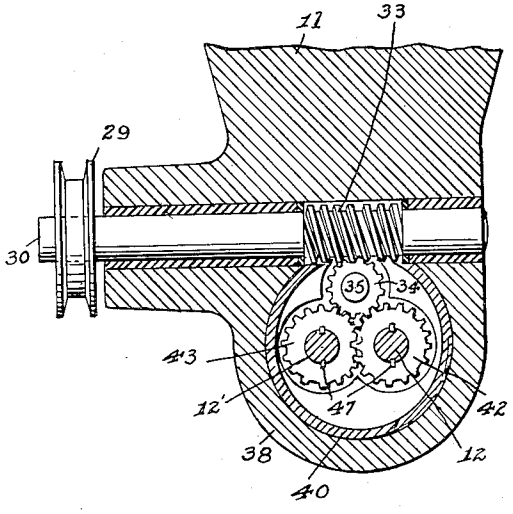

INVENTOR.
Frank A. Heilman
BY
Christian M. Newman
ATTORNEY

Patented July 10, 1934

1,966,295

UNITED STATES PATENT OFFICE

1,966,295

ROTARY VIBRATING RIVETER

Frank A. Heilman, Bridgeport, Conn., assignor to The Grant Manufacturing and Machine Co., Bridgeport, Conn., a corporation of Connecticut

Application October 28, 1932, Serial No. 639,978

3 Claims. (Cl. 78—53)

My invention relates to new and useful improvements in rotary vibrating riveters such as are employed for forming heads on rivets, or other metal parts. The particular class of machines to which the invention has thus far been applied is relatively small machines wherein light but very rapid blows are struck by the riveting head, while being rotated.

The object of my invention is to provide a multiple spindle structure that will better adapt riveting machines to special classes of work wherein the rivets are grouped, and which may be used to simultaneously perform heading operations on several rivets or other parts positioned in proper spaced relation, and whereby a series of them can be headed in a period of time such as is now required for the heading of a single rivet.

I am aware that it is old to provide multiple spindle drill heads and like units adapted for increasing production in special lines, but my invention is not of such general characters, and is especially adapted for machines of the vibrating riveter type wherein the spindles are connected to a vibrating member such as a helve, in a way to be simultaneously reciprocated while being rotated through a gearing mounted in a fixed head through which the spindles are reciprocated by the vibrating element in which the said spindles are supported.

It is a further object of the invention to design the invention in a simple inexpensive and practical manner so that the cost and the selling price of a multiple spindle vibrating riveter will not need to be materially greater than that of a single spindle machine.

The invention accordingly consists in the features of construction, combination of elements and arrangement of parts as will be exemplified in the structure to be hereinafter described and claimed.

Similar characters of reference will be found to denote like or corresponding parts throughout the several figures, of which

Fig. 1 illustrates a side elevation of a commercial type of rotary vibrating riveter of a type to which my invention is adapted to be applied;

Fig. 2 is an enlarged vertical sectional view taken on line 2—2 of Fig. 1;

Fig. 3 is a horizontal cross section taken on line 3—3 of Fig. 2; and

Fig. 4 is a corresponding sectional view or layout illustrating a modified form of the invention wherein four spindles are employed instead of two, as illustrated in the preferred figures.

My present invention is herein preferably shown applied to a commercial type of rotary vibrating riveter, though it will be readily understood that the invention is equally applicable to other makes of machines, including a fixed member and a vibratory member.

Referring to the characters of reference marked upon the drawings, 10 indicates a pedestal which supports the several parts of the machine shown in Fig. 1, and includes a forwardly projecting arm 11 that forms a guide for the spindles 12—12' mounted therein for rotary and vertical movements, as will again be referred to. The pedestal also includes a pair of upwardly extended bearing members 13—13 between which the helve 14 is pivotally supported.

A hollow support 15 is secured to the base, and in it is mounted a post 16 having a threaded end portion provided with adjusting nuts 17 positioned on the top of the support and adapted to retain the post in position. The upper end of this post is suitably connected, as at 18, to support a table 19 positioned beneath the hammer head 20, in a way to support work thereon to be riveted. This table is thus adjustably mounted with respect to the pedestal so as to provide more or less clearance between the table and the hammer heads.

21 indicates an electric motor that is secured to the pedestal and operatively connected by means of a belt 22 with a driving pulley 23 normally loose upon a shaft 24 journaled in aligned bearings in the pedestal, a clutch mechanism 25 being provided between the said pulley and shaft and connected to be operated by a foot-pedal 26 for the starting and stopping of the machine.

On the opposite end portion of the driving shaft 24 is mounted a belt wheel 27 that carries a belt 28 connected to drive a small pulley 29 on a worm shaft 30 journaled crosswise of and in the arm 11 before mentioned. The rearwardly extended shorter end portion of the helve 14 is suitably connected to a rod 31, the lower portion of which connects with an eccentric 32 carried by the driving shaft 24, whereby vertical reciprocatory movement is imparted to the two ends of the helve and hammer spindles.

The worm-shaft carries a worm 33 that serves to drive a worm gear 34 mounted on a short shaft 35 journaled in an upper and lower bushing 36 and 37, both of which are secured in the guide 38 formed on the forward end of the arm 10. The lower one 37 of these bushings is secured in place in the head by a collar 39 positioned against the underside of the guide 11, while the upper bushing is held in position by a flanged collar 40 which

in turn is secured to the top end of the guide by screws 41. The adjacent faces of these two bushings 36 and 37 are recessed to accommodate the before mentioned relatively wide gear 34. These bushings are further recessed, see Figs. 2 and 3, to accommodate the spindle gears 42 and 43 mounted on the spindles 12 and 12'.

The gear 34 which is a relatively wide gear meshes with both of the spindle gears 42 and 43 that, see Fig. 2, are arranged one above the other and so that the hammer spindles 12 and 12' will be driven in the same direction. A suitable washer 44 is positioned between these two gears. There is also a smaller washer 45 positioned upon the spindle 12 above the gear 42, between it and the before mentioned bushing 36. A somewhat similar washer 46 is mounted on the adjacent spindle 12' between its gear 43 and bushing 37.

These gears 42 and 43 are provided with keys that slidably engage key-ways 47 in the spindles so that the spindle will be rotated through the gears, yet are free to be reciprocated in the bushings of the guide and in which they are mounted. The hammer heads 20 positioned on each of the spindles obviously serve to operate upon the rivet or other member to be headed, and serve to form any shaped head on a rivet desired, according to the face of the said heads 20.

In addition to the rotary movements, as above specified, for these spindles and heads, I also provide means for imparting reciprocatory movements thereto, whereby the hammer heads carried on the lower ends are vibrated in a way to rapidly strike the rivets, or members that are being operated upon, while being rotated. These spindles are hung on the forward end of the helve and are reciprocated through the vibratory movements thereof, as will be understood from Figs. 1 and 2.

The construction of the upper end portion of the spindles, with the helve, is alike in both instances and comprises an annular flange 48 formed on each spindle below the reduced end portion 49 that projects up into suitable recesses 50 in the rubber cushion 51 that is positioned beneath the forward end portion of the helve 14. A plate 52 that is provided with suitable holes to receive the end portions 49 of the spindles is positioned between the said rubber cushion 51 and the two flanges 48 of the spindles, and beneath the said flanges I provide a fibre plate 53 with spaced holes to receive the spindles. The said assemblage of parts is operatably secured together by means of a strap 54 provided with holes to accommodate the spindles and extends up and over the helve in a way to enclose the upper ends of the spindles, the bushing, plate and rubber cushion member so that the spindles will be reciprocated with the movement of the helve in a manner to cause the hammer heads on the lower ends of the spindles to produce rapid blows on the work and at the same time to allow the said spindles and hammer heads to freely rotate.

In Fig. 4 of the drawings I have illustrated a modified form of my invention wherein the same principle is applied to a series of four spindles 12^a and upon the lower ends of which suitable hammer heads may be mounted, each of the spindles being provided with a gear 42^a through which they are rotated. Each of these gears is mounted upon and in slidable relation to the said spindles and is connected to be driven through a central idler gear 55 so that here again all the gears and spindles are rotated in the same direction through a worm 33 which is connected to and directly drives one of the spindle gears 42^a.

In this illustration the spindles are shown to be equally spaced apart and equally spaced from the axis of the central gear, forming a rectangular lay-out that would be adapted to simultaneously operate on four rivets when arranged in similar spaced relation. In this connection it will be seen that while the assemblage includes four spindles, yet it is adapted to comprise a lesser number by simply removing one or more of the gears and spindles. The upper ends of these spindles would obviously be flanged or otherwise provided with suitable means for engagement with the strap covered end of a helve, as shown in Figs. 1 and 2, so as to insure like simultaneous vertical movements of said spindles during the rotations thereof.

Having thus described my invention, what I claim and desire to secure by Letters Patent is:

1. In a multiple spindle rotary vibrating riveter, the combination with a support including a guide, a helve mounted for vibratory movements in the support, a series of closely adjacent spindles carried by the end portion of the helve and mounted for longitudinal reciprocatory movement in the guide under the influence of said helve, a gear keyed on and in sliding relation to each spindle, the gear upon one spindle being above and overlapping that of the other spindle, a wide gear in driving engagement with both said gears and a worm drive means connected thereto to simultaneously rotate both of said gears and their spindles.

2. In a multiple spindle rotary vibrating riveter, the combination with a support including a guide, a worm gear journaled in the guide, a relatively wide gear driven thereby, a series of other gears in the guide driven by the first mentioned gear, a helve mounted for vibratory movement in the support, a series of closely adjacent spindles having enlarged head portions rotatably carried in the end portion of the helve and mounted for longitudinal reciprocatory movement in the guide and said series of gears, a two part bearing for the spindles positioned in the guide, one above and the other beneath the gears.

3. In a multiple spindle rotary vibrating riveter, the combination with a support including a guide, a helve mounted for vibratory movements in the support, a series of closely adjacent spindles carried by the end portion of the helve and mounted for longitudinal reciprocatory movement in the guide under the influence of said helve, a gear keyed on and in sliding relation to each spindle, the gear upon one spindle being above and overlapping that of the other spindle, and a worm drive means connected to simultaneously drive both of said gears, and a washer intermediate the said two part bearings and gears.

FRANK A. HEILMAN.