Dec. 8, 1964 P. J. NATHO 3,160,427

GAGE-PLUG CONNECTION FOR WELLHEAD ASSEMBLY

Filed Dec. 4, 1961

Fig. 1

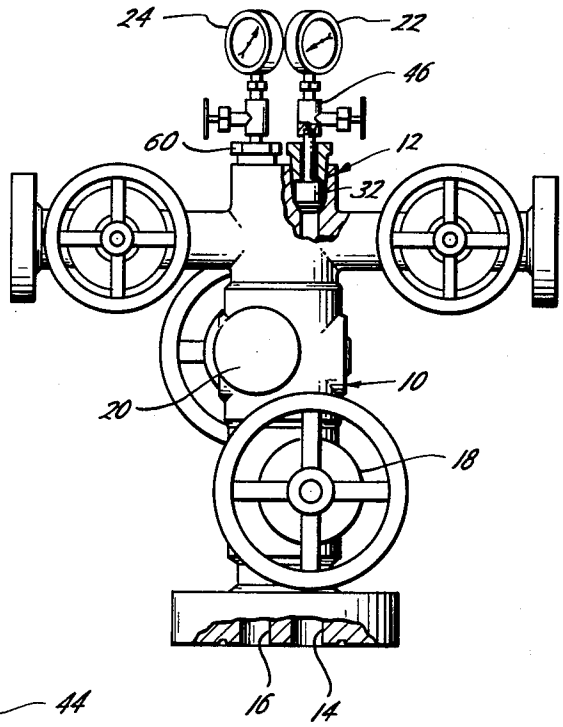

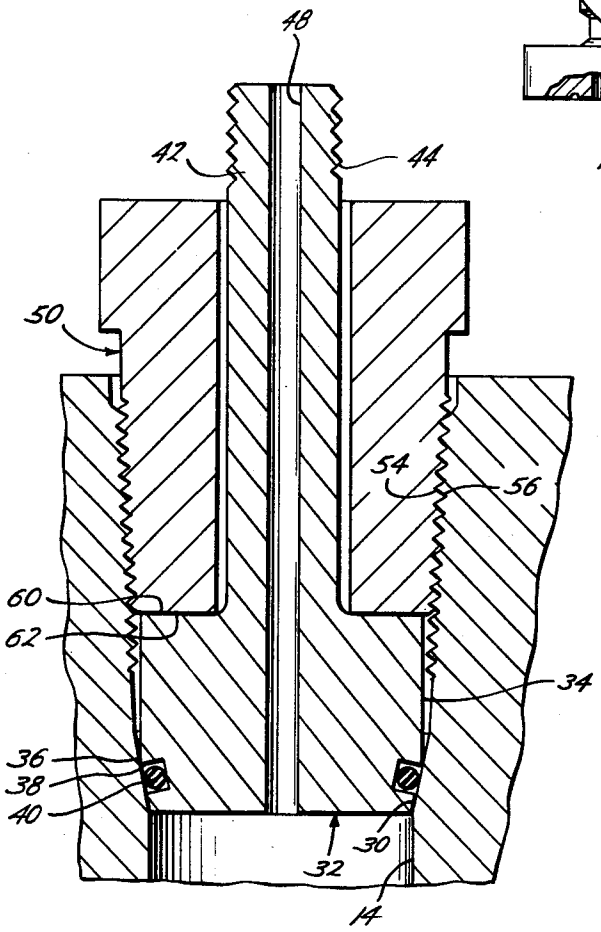

Fig. 2

Paul J. Natho
INVENTOR.

BY Russell E. Schlorff
ATTORNEY

United States Patent Office 3,160,427
Patented Dec. 8, 1964

3,160,427

GAGE-PLUG CONNECTION FOR WELLHEAD ASSEMBLY

Paul J. Natho, Houston, Tex., assignor to ACF Industries, Incorporated, New York, N.Y., a corporation of New Jersey

Filed Dec. 4, 1961, Ser. No. 156,757
3 Claims. (Cl. 285—215)

This invention relates to wellhead equipment and more particularly to a non-rotating top gage-plug connection therefor.

In order to have a visual indication of the pressure in an oil or gas well, the top of a Christmas tree is usually provided with a pressure gage which indicates the pressure in the well. The pressure gage is usually connected to a gage-plug adapter or reducing bushing positioned in the top of a conduit in the wellhead assembly or Christmas tree. In order to provide access to the well for periodic servicing such as paraffin removal or bottom hole pressure recording with wire line equipment, the gage is removed and workover or service equipment of various kinds is attached to the top of the tree in place of the pressure gage.

In multiple wells, particularly those in which the Christmas tree is an integral body, the conduits are usually so close to each other that it is not possible to screw two gages into place on the same level. The gages have to be either staggered one above the other or an angle valve or fitting has to be used and the gage set on its side. If an angle fitting is used and the gage is set on its side, the gage is then difficult to read. Likewise if the two gages are in an upright position and the conduit having the lower gage attached has to be worked over, it is necessary to stop the flow in the other conduit and remove that gage before the lower gage can be removed. Accordingly, it is expedient that the gages are so positioned that they are upright and either one can be removed independently of the other.

In order to permit side by side vertical mounting on integral multiple type Christmas trees, it is necessary to use a non-rotating type of top gage-plug connection, that is one in which the gage-plug adapter does not have to be rotated to secure it to the wellhead assembly. While the prior art has shown numerous types of non-rotating top gage-plug connections, in every known case the thread used to hold the retaining collar in place has utilized a straight thread. This practice has probably grown up inasmuch as a connection using a straight thread is easy to manufacture. A straight thread just exerts linear force and axial movement is not terminated until the end of the retaining collar contacts the plug. If a tapered threaded bore is used, it is necessary for the connection to be so designed that axial movement is arrested by contact with the plug before there is full mating of the threads. However, the benefits derived from the utilization of a tapered thread are very material to the man in the field. If a tapered threaded bore is used, it is possible for the man in the field to screw in a tapered threaded nipple for the pressure-tight attachment of workover equipment and the necessity of utilizing a crossover sub, that is, a nipple with a combination thread and a pressure seal, is eliminated. Accordingly, it is the object of the present invention to provide a non-rotating type top gage connection for wellhead equipment which includes a conduit having an outer extremity thereof flared outwardly and pressure-tight female threads formed in the outer extremity for receiving the threaded tapered retaining collar.

Other and further objects of the invention will be obvious upon an understanding of the illustrative embodiment about to be described, or will be indicated in the appended claims, and various advantages not referred to herein will occur to one skilled in the art upon employment of the invention in practice.

A preferred embodiment of the invention has been chosen for purpose of illustration and description and is shown in the accompanying drawings, forming a part of the specification, wherein:

FIG. 1 is a front elevational view with a piece of wellhead equipment having the non-rotating gage-plug connection of the present invention.

FIG. 2 is an enlarged sectional view showing the details of the gage-plug connection used in FIG. 1.

Referring now to the drawings, in FIG. 1 there is an integral multiple wellhead assembly **10** having a non-rotating gage-plug connection **12** of the present invention.

Within the past decade, producers have found that in some areas there very well may be several oil bearing sands at different levels. Rather than drill a single well to each sand, they have found that it is more expedient and economical to multiply complete all sands through a single drilled hole. Each completion is independent of the other having a separate conduit to the surface. The cost of drilling is proportionate to the diameter of the hole drilled, and therefore, the smaller the diameter the more economical the operation. Accordingly, the individual conduits are as close together as possible. As can be seen in FIG. 1, there are two conduits **14** and **16** each independently controlled by its own master valve **18** and **20**, respectively. The conduits **14** and **16** are so close together that top pressure gages **22–24** for the conduits can not be placed in side by side relationship on the same level unless they are slightly canted. Therefore, it is desirable to have a non-rotating type gage-plug connection which permits positioning of the gages on the same level.

The top gage-plug connection **12**, in addition to serving as an attachment for the pressure gage **22**, also is used to permit entry into the particular well for periodic servicing. This servicing may be for paraffin removal or bottom hole pressure recording which requires the utilization of wireline equipment, or for periodic corrosion treatment, or other working over. In such event, the gage is removed and either wireline equipment or other servicing equipment is attached to the top of the wellhead assembly **10**. Historically, the wellhead assembly has been provided with a straight thread at the top gage connection. Accordingly, in order to attach other pressure retaining equipment, it is necessary to attach a nipple with a combination thread and pressure seal before other equipment requiring a pressure-tight connection can be attached. As previously mentioned, it is the principal object of this invention to eliminate the necessity of such auxiliary equipment.

In the non-rotating gage-plug connection **12** of the present invention, the well conduit **14** is provided with a seal engaging surface **30** located axially inward of the outer end. The seal engaging surface **30** may be a tapered surface flaring outwardly as shown in FIG. 2. A gage-plug adapter **32** having a cylindrical inner portion **34** which terminates in a tapered end portion **36** mates with the sealing surface **30**. An annular groove **38** is located in the tapered end **36** and an O-ring **40** is positioned in the groove **38** for sealing engagement with the seal engaging surface **30**. The axial outer portion **42** of the gage-plug adapter is of reduced diameter and extends past the top of the wellhead assembly **10**. The outer end of the axial outer portion is provided with threads **44** to receive a gage valve **46** to which the gage **22** is attached. The gage-plug adapter **32** is provided with

an axial passage 48 through which the pressure in the well flows. If desired, other types of seals besides the O-ring used in the drawings may be utilized.

In order to retain the gage-plug adapter 32 in sealing contact, a retainer collar 50 is utilized. The retainer collar 50 is provided with a central passage 52 of a slightly larger diameter than the outer portion 42 of the gage-plug adapter 32 through which the outer portion 42 extends. To provide means to attach the retainer collar 50 to the wellhead assembly 10, the outer end of the conduit 14 is provided with an outwardly flared tapered bore having pressure type female thread 54 and the peripheral outer surface of the retainer collar 50 is provided with a tapered male thread 56 which engages with the female thread 54. So that the servicing equipment can be attached to the wellhead assembly, the female thread 54 should be made in accordance with A.P.I. standards. The male thread 56 on the retainer collar 50 does not have to be a pressure sealing thread and for convenience may be any standard pipe thread which will mate with the female thread 54. It is the purpose of the retainer collar 50 to retain the gage-plug adapter in sealing engagement and not for the threads to act as a seal. In order to facilitate turning of the retainer collar 50, the outer end may be provided with wrench faces 58. The diameter of the cylindrical inner portion 34 of the gage-plug adapter 32 is slightly smaller than the innermost female thread 54 so that it can be inserted past the threads 54.

The seal for the gage-plug connection is established between the sealing surface in the conduit and the gage-plug adapter; therefore, it is important that full thread engagement of the retainer collar 50 does not take place prior to sufficient axial insertion of the inner end 60 of the retainer collar 50 to axially force the gage-plug and sealing surface into sealing engagement. In prior art assemblies which used a straight thread, this was no problem since axial movement of the retainer collar did not stop until axial movement of the retainer collar was arrested by the inner end of the retainer collar contacting the end of the gage-plug adapter; however, with the use of tapered thread full thread engagement will arrest further axial movement even though the end of the retainer collar may not have made contact. Accordingly, the inner cylindrical portion 34 of the gage-plug adapter 32 is of sufficient axial height to assure that the axial inner end 60 of the retainer collar has contacted the top 62 of the cylindrical inner portion 34 and axially forced the gage-plug adapter into intimate sealing engagement with the sealing surface of the conduit prior to full thread engagement of the retainer collar 50. In other words, it would be possible to continue inward axial movement of the retainer collar if it were not for the arresting of its further axial movement by contact with the gage-plug adapter. Accordingly, by having the length of the inner portion of the gage-plug adapter and the length of the retainer collar extending past the thread so proportioned that axial movement of the retainer collar is arrested by contact of the inner end of the retainer collar with the gage-plug adapter sealing of the gage-plug connection is assured.

With the use of the present gage-plug connection 12, pressure sealing type equipment may be directly attached to the top of the wellhead assembly without the intercession of a cross-over sub. This is of considerable advantage to the operating personnel.

As various changes may be made in the form, construction and arrangements of the parts herein without departing from the spirit and scope of the invention and without sacrificing any of its advantages, it is to be understood that all matter herein is to be interpreted as illustrative and not in a limiting sense.

What I claim is:

1. A non-rotating gage-plug connection for wellhead equipment comprising wellhead equipment defined in part by having a conduit extending therethrough, said conduit having a seal engaging surface located axially inward of its outer end, said seal engaging surface being a tapered surface flaring outwardly, the outer extremity of the conduit being flared outwardly and having pressure sealing type female threads formed therein, a gage-plug adapter having a cylindrical inner portion slightly smaller in diameter than the innermost female thread, the end of the cylindrical inner portion tapering inwardly to mate with the seal engaging surface of the conduit, an annular groove in the tapered end, an O-ring in said groove for sealing engagement with the seal engaging surface, the axial outer portion of the gage-plug adapter being of reduced diameter, an axial passage extending through the center of the gage-plug adapter, the outer end of the reduced outer portion provided with male threads to receive a gage valve, a retainer collar comprised of an annular member having a central passage of a slightly larger diameter than the outer portion of the gage-plug adapter telescoped over the outer portion, the peripheral outer surface being tapered and provided with male threads for engagement with the female threads in the conduit, the inner portion of the gage adapter being of such height that the inner end of the retainer collar is arrested by contact therewith prior to full thread engagement of the gage-plug retainer, the outer end of the gage plug retainer formed into wrenching faces.

2. A non-rotating gage-plug connection for wellhead equipment comprising wellhead equipment defined in part by having a conduit extending therethrough, said conduit having a seal engaging surface located axially inward of its outer end, the outer extremity of the conduit being flared outwardly and having pressure sealing type female threads in the outer end thereof, a gage-plug adapter having a cylindrical inner portion and an axial outer portion of reduced diameter, means establishing a seal between the gage-plug adapter and the seal engaging surface of the conduit, a retainer collar comprised of an annular member having a central passage of a slightly larger diameter than the outer portion of the gage-plug adapter, telescoped over the outer portion, the peripheral outer surface of said retainer collar being tapered and provided with male threads for engagement with the female threads in the conduit, the inner portion of the gage adapter being of such height that the inner end of the retainer collar is arrested by contact therewith prior to full thread engagement of the gage-plug retainer.

3. A non-rotating gage-plug connection for wellhead equipment comprising wellhead equipment defined in part by having a conduit extending therethrough, said conduit having a seal engaging surface located axially inward of its outer end, the outer extremity of the conduit being flared outwardly and having pressure sealing type female threads in the outer end thereof, a gage-plug adapter having a cylindrical inner portion and an axial outer portion of reduced diameter, an axial passage extending through the center of the gage-plug adapter, means establishing a seal between the gage-plug adapter and the seal engaging surface of the conduit, a retainer collar comprised of an annular member having a central passage of a slightly larger diameter than the outer portion of the gage-plug adapter, telescoped over the outer portion, the peripheral outer surface of said retainer collar being tapered and provided with male threads engaged with the female threads in the conduit, the inner cylindrical portion of the gage-plug adapter and the end of the retainer collar being so proportioned that inward axial movement of the retainer collar is arrested by the gage adapter prior to full thread engagement.

References Cited in the file of this patent

UNITED STATES PATENTS

2,676,781	Hobbs	Apr. 27, 1954
2,889,886	Gould	June 6, 1959
2,954,041	Gasche et al.	Sept. 27, 1960