Dec. 26, 1950 W. G. SCHUTT 2,535,961

HOIST OR OFF-BEARER

Filed Aug. 26, 1948 2 Sheets-Sheet 1

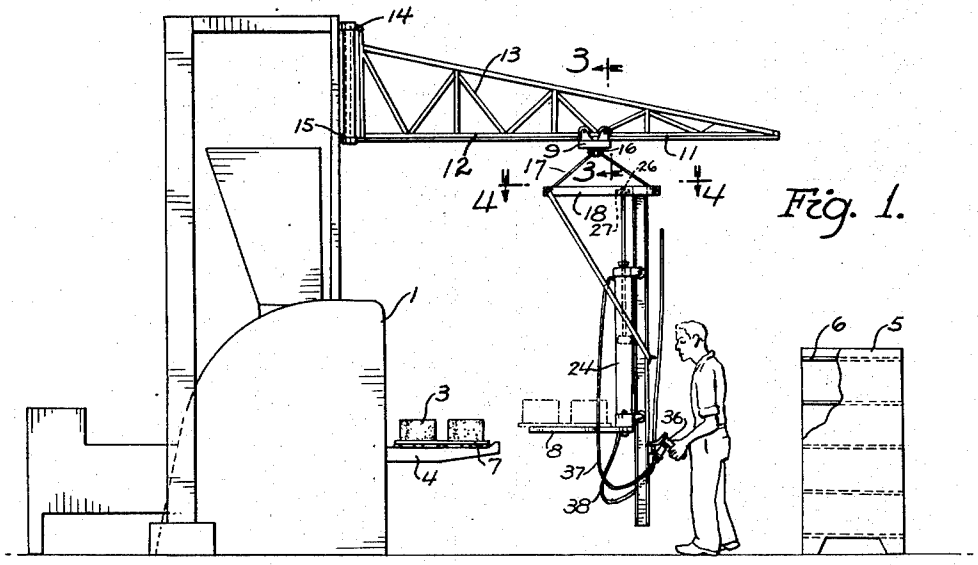


Fig. 1.

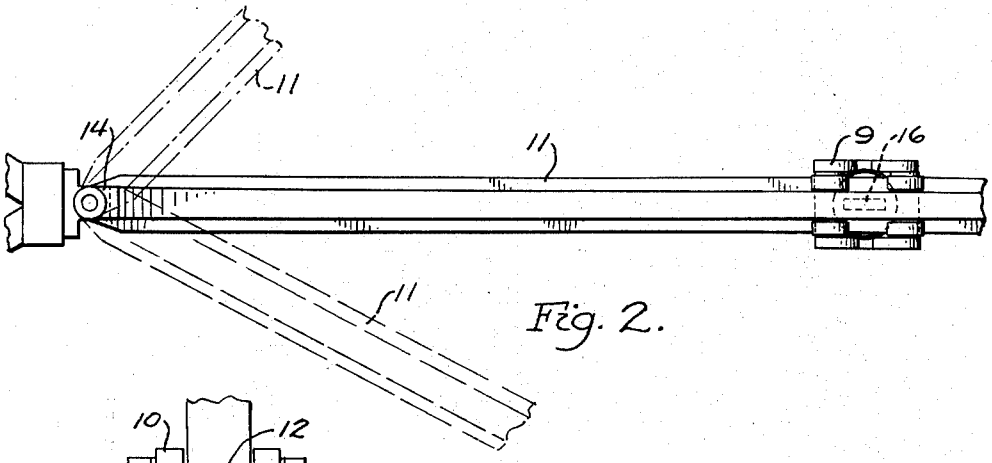


Fig. 2.

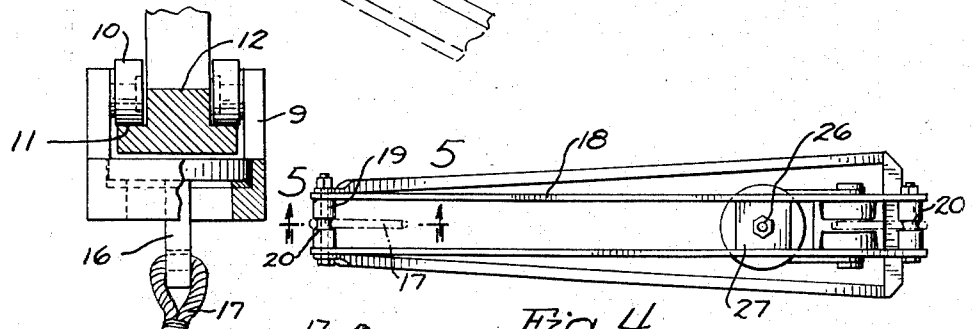


Fig. 3.

Fig. 4.

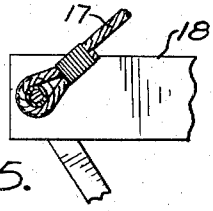


Fig. 5.

INVENTOR.
Walter G. Schutt

BY

Barnes, Kisselle, Raisch & Choate
ATTORNEYS.

Dec. 26, 1950 W. G. SCHUTT 2,535,961

HOIST OR OFF-BEARER

Filed Aug. 26, 1948 2 Sheets-Sheet 2

Fig. 6.

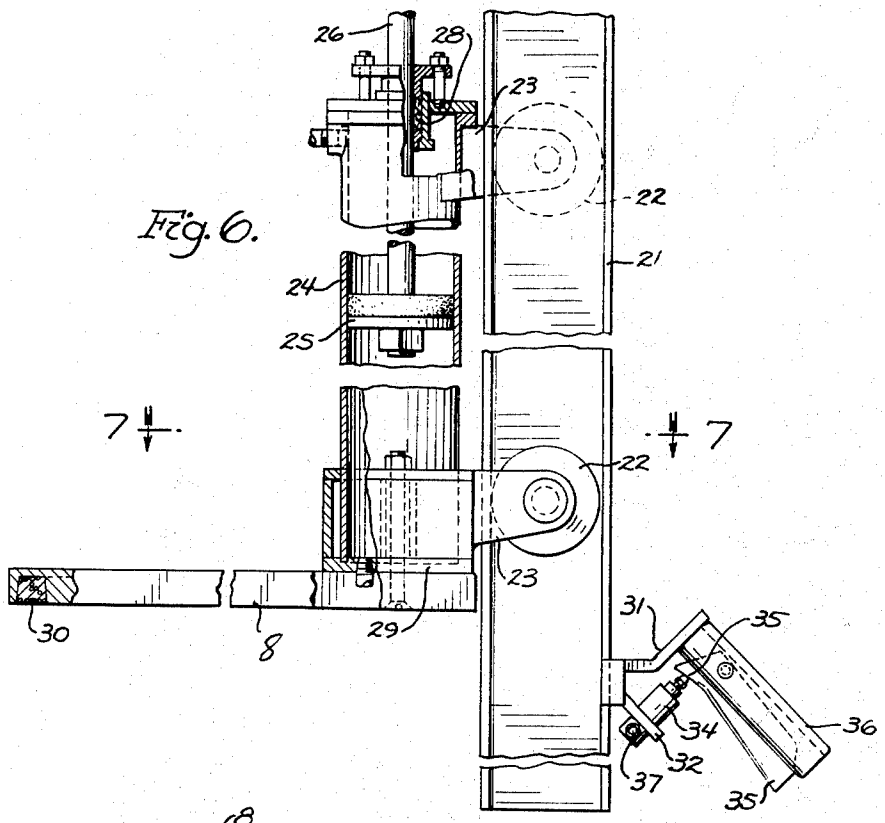


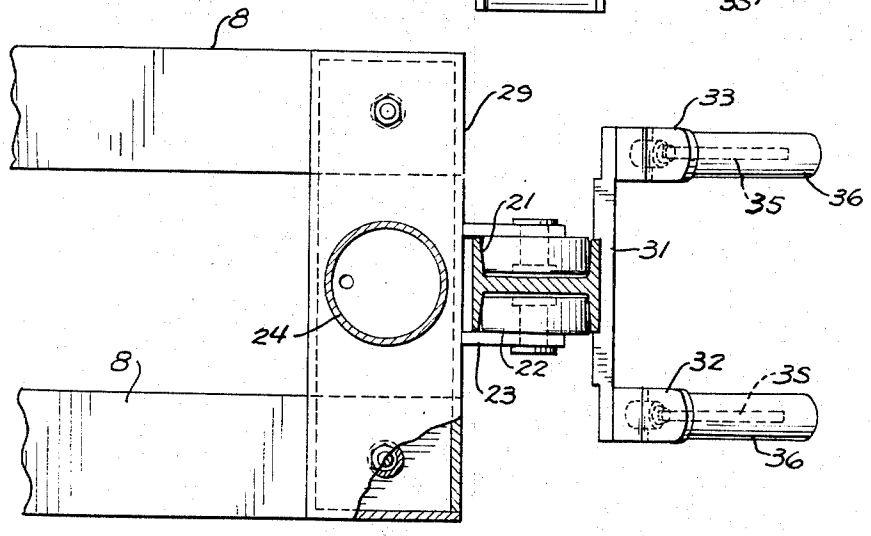


Fig. 7.

INVENTOR.
Walter G. Schutt
BY
Barnes, Kisselle, Laughlin & Raisch
ATTORNEYS.

Patented Dec. 26, 1950 2,535,961

# UNITED STATES PATENT OFFICE

2,535,961

## HOIST OR OFF-BEARER

Walter G. Schutt, Adrian, Mich., assignor to Stearns Manufacturing Company, Adrian, Mich., a corporation of Michigan

Application August 26, 1948, Serial No. 46,332

5 Claims. (Cl. 212—32)

1

This invention relates to hoists or "off-bearers" for concrete block machines or similar uses. The object of the invention is to provide a simple hoist that can be used in connection with a concrete block machine or for similar work. The hoist can be used to elevate the platform that carries the product without requiring the operator to lift his arms as is necessary with customary hoists. In hoists heretofore used in connection with concrete block machines, a fluid operated cylinder and piston have been suspended from a trolley running on a track and there has been suspended from the movable member (cyclinder or piston) a yoke-like member whose lower arm or arms forms a pick-up platform for the work. Secured to the lower end of the yoke are the controls that control the fluids that operate the hoist. The workman guides the off-bearer or yoke by means of grippers by which he can manuever the pick up platform and at the same time control the fluid. This has been tiresome because the operator has had to raise and lower his arms with the platform and at the same time control the movement of the platform and the fluid valves with his arms and hands in an elevated and unnatural position. The blocks are delivered from a concrete block machine very rapidly and the operator has to work fast and continuously, hence he is subject to considerable fatigue and strain by reason of his arms being brought into unnatural position in taking the work off the machine platform and laying it up in the drying racks.

Referring to the drawings:

Figure 1 is an elevation showing my improved off-bearer being used in connection with a concrete block machine and a drying rack.

Figure 2 is a plan view of the trolley and its swingable track.

Figure 3 is a section on the line 3—3 of Figure 1.

Figure 4 is a plan view of the hoist taken on the section line 4—4 of Figure 1.

Figure 5 is a section on the line 5—5 of Figure 4.

Figure 6 is an enlarged detail view of the portion of the hoist adjacent the pick up arms.

Figure 7 is a section on the line 7—7 of Figure 6.

1 is a concrete block machine in which the blocks are molded by apparatus that need not be herein detailed, illustrated, or explained. Suffice it to say that the aggregate is introduced into molds, vibrated, packed, and the blocks 3 are pushed out on the machine platform on arms

2

4. This is the usual mode of operation in making and molding concrete or cinder blocks in a machine. It is necessary to lift the blocks off the arms 4 and to place them in a rack 5 which has open shelves 6. The concrete blocks are pushed out of the machine on pallets 7 which can be lifted off the arms 4 by the pick up arms 8 of the hoist. This is clearly shown in Figure 1.

The workman then has to swing the hoist and the arms around and deposit the pallets on the open shelves 6 of the drying rack 5. This he can do by reason of the suspension of the off-bearers on the trolley 9. This trolley has wheels 10 which run on the tracks 11 of the T beam 12 which is supported in cantilever fashion by the truss 13 attached to the knuckle 14 of the hinge bracket 15 that is attached to the concrete machine or to the wall of the workroom. The hoist is suspended from the trolley by a swivel 16 which supports the ropes 17 that support the suspension bars 18 of the hoist. These suspension bars 18 are provided at each end with spacers 19 provided each in the mid-portion with a groove 20 into which the cable 17 is looped as shown in Figure 5.

The two suspension bars 18 support the vertical I beam track 21 which is shown in detail in Figures 6 and 7. Running on this track are a pair of rolls 22 secured by brackets 23 to the air cylinder 24 (or it may be hydraulic) which moves up and down on piston 25 which is suspended from the suspension bars by means of the suspension rod 26 that is hung from plate 27 that is attached to the suspension bars. The cylinder has a packing gland 28 on the piston rod and at the bottom of the cylinder is a cross bar 29 which supports the pick up arms 8. These arms may be provided with an electro-magnetic winding 30, if this is desired so that the arms can be magnetized by a suitable electrical control for lifting the empty pallets off the track by simply lowering the lifting arms on top of an empty pallet in the rack and then returning the pallet and dropping it on a conveyor (not shown) as described and claimed in my co-pending application Serial No. 18,798, filed April 3, 1948. However, the electro-magnetic feature is not claimed in the present application and is not an essential part of this hoist or off-bearer.

Attached to the vertical tracks 21 near the bottom is a cross bar 31 which has legs 32 and 33 at the ends. These legs each carry a valve 34 which can be opened and closed by the operation of the pinch lever 35 pivoted to the handle 36 attached to the cross bar 31. These valves are in

the air lines 37 and 38 which lead to the top and bottom of the air cylinder.

It will be seen that the operator may grip the handles 36 as he is shown doing in Figure 1, and by turning the vertical track 21 on the swivel 12 and by the aid of the carriage 9 and the swinging track beam 11, he may carry the work around to any position in the area of the coverage of the swinging T beam. He may elevate or lower the pickup arms by means of pinching on the levers 35 which operate the air valves to turn the air in one end of the cylinder and release it from the other end of the cylinder to raise or lower the work carrying arms without in any way raising or lowering the operator's arms. This is a much easier and more comfortable way of controlling an off-bearer than in the apparatus heretofore available.

What I claim is:

1. A hoist or off-bearer for use for concrete block forming machines or for other elevating and conveying operations having in combination a beam forming a track swinging in substantially a horizontal plane, a trolley adapted to be moved along the beam on the track, a vertical track hung from said trolley by a swivel, control handles and fluid control valves secured to said vertical track, a piston and fluid operated cylinder, one of them held against vertical movement and the other movable along said vertical track, one or more lifting arms secured to the movable member and extending laterally to support the work to be handled, and flexible hose connecting the cylinder with the hand controlled fluid valves, whereby by maneuvering the handles and operating the valves one can maneuver the lifting arms and apply fluid pressure in the cylinder to elevate or lower the said arms.

2. A hoist or off-bearer for use with concrete block machines or other purposes, having in combination, a swingable support including a track, a trolley movable on said track, a vertical track hung from said trolley, a piston and cylinder hung from said trolley, one of said elements movable with respect to the other by motive fluid, the movable element guided on said vertical track, one or more horizontal arms projecting from said movable element for lifting or lowering the load when the motive fluid is turned into the cylinder, hand operated control means for the motive fluid secured to the lower end of said vertical track, and conduits for the motive fluid connecting the said control means with the cylinder.

3. A hoist or off-bearer for use with concrete block machines or other purposes, having in combination, a swingable support including a track, a trolley movable on said track, a vertical track hung from said trolley, a piston and cylinder hung from said trolley, one of said elements movable with respect to the other by motive fluid, the movable element guided on said vertical track, one or more horizontal arms projecting from said movable element for lifting or lowering the load when the motive fluid is turned into the cylinder, hand operated control means for the motive fluid secured to the lower end of said vertical track, said control means comprising two handles, hand levers and valves operated by the levers to control the flow of the fluid to and from the two ends of the cylinder, and conduits for the motive fluid connecting the said control means with the cylinder.



4. A hoist or off-bearer for use with concrete block machines or other purposes, having in combination, a swingable support including a track, a trolley movable on said track, a vertical track hung from said trolley upon a swivel, a piston and cylinder hung from said trolley by a swivel, one of said elements movable with respect to the other by motive fluid, the movable element guided on said vertical track, one or more horizontal arms projecting from said movable element for lifting or lowering the load when the motive fluid is turned into the cylinder, hand operated control means for the motive fluid secured to the lower end of said vertical track, and conduits for the motive fluid connecting the said control means with the cylinder.

5. A hoist or off-bearer for a concrete block machine or other purposes, having in combination a swinging beam of inverted T cross-section, a trolley movable on the inverted T, suspension bars, cables for suspending the bars from said trolley, a swivel between the cables and the suspension bars, a vertical track suspended from said bars, a piston suspended from said bars by a piston rod, a cylinder movable on said piston by fluid pressure and having means for engaging said vertical track to guide the travel of said cylinder, flexible fluid lines leading to and from said cylinder, a bar secured to the lower end of said vertical track, valves in said fluid lines mounted upon said bar, handles secured to said bar, valve controlling levers mounted at said handles, and lifting arms projecting from the lower end of said cylinder.

WALTER G. SCHUTT.

No references cited.