(No Model.)

S. R. HEIDELBERG.

COMBINED AIR HOSE COUPLING AND STOP VALVE.

No. 565,981. Patented Aug. 18, 1896.

Fig. 1.

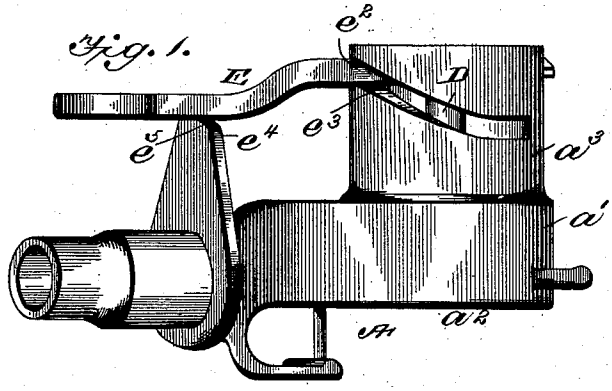

Fig. 5.

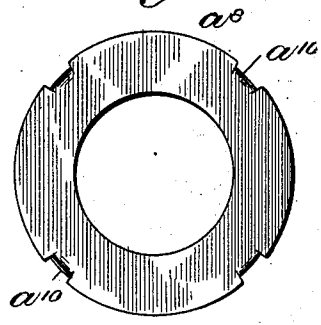

Fig. 2.

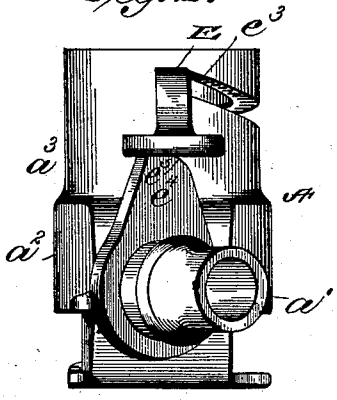

Fig. 3.

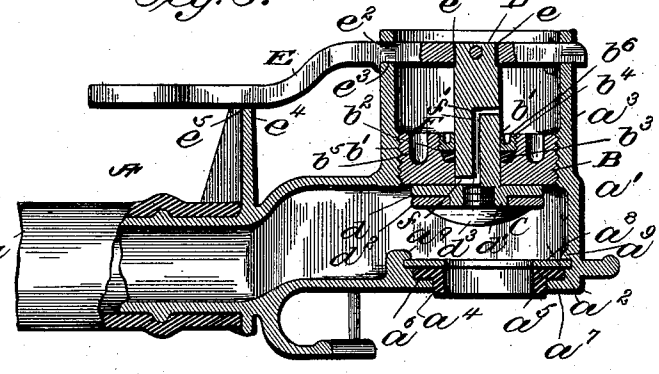

Fig. 4.

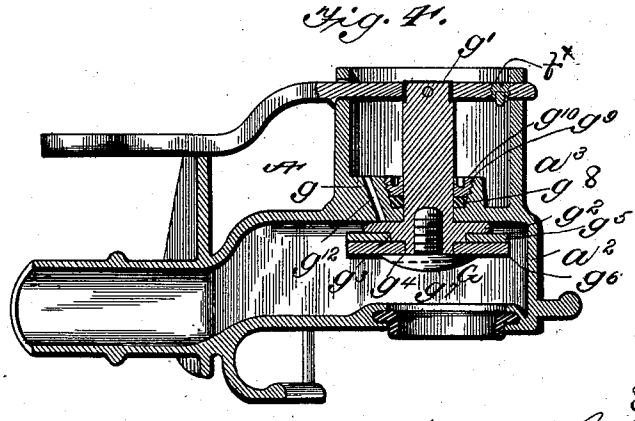

Witnesses

John Ionne

F. F. Graham.

Inventor

Samuel R. Heidelberg,

by J. Fred. Reily,

his Attorney.

THE NORRIS PETERS CO., PHOTO-LITHO., WASHINGTON, D. C.

UNITED STATES PATENT OFFICE.

SAMUEL R. HEIDELBERG, OF TYLER, TEXAS, ASSIGNOR OF ONE-HALF TO HORACE H. ROWLAND, OF SAME PLACE.

COMBINED AIR-HOSE COUPLING AND STOP-VALVE.

SPECIFICATION forming part of Letters Patent No. 565,981, dated August 18, 1896.

Application filed September 28, 1895. Serial No. 564,031. (No model.)

To all whom it may concern:

Be it known that I, SAMUEL R. HEIDELBERG, a citizen of the United States, residing at Tyler, in the county of Smith and State of Texas, have invented certain new and useful Improvements in a Combined Air-Hose Coupling and Stop-Valve; and I do declare the following to be a full, clear, and exact description of the invention, such as will enable others skilled in the art to which it appertains to make and use the same, reference being had to the accompanying drawings, and to the letters of reference marked thereon, which form a part of this specification.

This invention contemplates certain new and useful improvements in air-brakes and relates more particularly to the combining of a stop-valve with the air-hose coupling in the train-pipe.

It is well-known in the art that when train-pipes are disconnected the rear coupling is frequently left open, thus rendering the air-brakes utterly useless until closed. It is also well known that the disconnecting of the train-pipes without first relieving or balancing the air-pressure therein is a frequent source of danger to the trainmen because of the jumping or rebound of the couplings when disconnected.

It is the main object of my invention to overcome these difficulties, and to that end I so construct and arrange a cut-off valve in the air-hose coupling, in lieu of the ordinary angle-cock, as to render it necessary to shut off said valve before the coupling can be safely disconnected, thereby insuring the closing of the valve before the cars are uncoupled or separated and also giving a signal whenever said valve is moved to or from its seat. When said valve is closed, the air-pressure around the same is so balanced that the couplings may be safely disconnected without danger of the usual jump or rebound.

A further object of my invention is to provide a cut-off valve in connection with the air-hose coupling whereby the accumulation of dirt, cinders, and other foreign substances in the train-pipe is prevented.

The invention will be hereinafter fully set forth, and particularly pointed out in the claims.

In the accompanying drawings, Figure 1 is a view in side elevation. Fig. 2 is a rear view. Fig. 3 is a longitudinal sectional view. Fig. 4 is a similar view of a modified form. Fig. 5 is a detail.

Referring to the drawings, A designates the air-hose coupling, which is united to the hose a of the train-pipe in the usual manner. The casing a' of the air-chamber a^2 of the coupler is provided with an upper cylindrical portion a^3.

In the bottom of casing a' is formed the usual opening a^4, forming communication with the adjoining coupler, the gasket a^5 being extended through said opening and provided with a flange a^6, adapted to rest on a circular offset a^7 of said casing. This gasket is held in position by a ring a^8, fitting beneath shoulders a^9, formed above the offset a^7. The ring a^8 is inserted into position by being bent so that the same will pass under the shoulders a^9, after which said ring is flattened out. In Fig. 5 I have illustrated a ring which is provided with struck-up portions a^{10}, which are flattened out after said ring is moved under the shoulders a^9.

The cylindrical portion a^2 is provided with an interior threaded portion b, which is adapted to support a threaded plug B, which in turn is provided with a central hole or opening b' for the passage of the valve-stem of the cut-off valve. The plug B is provided with a central chamber b^2, on the bottom of which rests packing b^3, adapted to prevent escape of air through the hole or opening b', said packing being held in position by a threaded plug b^4, working in said chamber b^2. Recesses b^5 and b^6 are formed in the top faces of plugs B and b^4, whereby said plugs may be engaged by a suitable wrench.

C is the valve, the stem D of which is projected up through the hole or opening b' of plug B. This valve comprises a circular disk d, formed integral with stem D and having a central cylindrical extension d' adapted to receive a leather valve-bearing ring d^2, which is secured in place by a suitable screw d^3. The valve-bearing d^2 is adapted to seat upon the ring a^8.

The stem D of the valve is extended up through the plugs B and b^4 and is provided

with an upper squared portion e, around which fits a corresponding opening e' of an operating-handle E. Said handle is provided with reduced portions e^2, which fit in inclined slots e^3 of the cylindrical portion a^2, whereby the valve C is moved up or down by the turning of said handle. The handle E is held locked in a flange e^4, projecting from the casing a', said flange being provided with a cam-like end e^5, upon which said handle is designed to bind.

The valve-stem D is provided with a hole or opening f immediately above disk d, which communicates with a central hole or bore F of said stem. A second hole or opening f' leads from the upper end of said bore to the exterior of the valve-stem.

When the valve is raised to its highest limit, the opening f is normally closed by plug B. Immediately upon the valve being moved toward its seat, however, the opening f passes below plug B and allows air to escape from the train-pipe through chamber a^2, the air in its passage through said opening and its outlet emitting a shrill whistle or signal. This escape of the air continues until the valve is seated, by which time the opening f' will have passed below the plug B, whereby further outlet of the air is prevented. The openings f and f' and bore F are not of sufficient diameter to allow of any considerable reduction in the train-pipe, but when the valve C has reached its seat the air-pressure on either side of the same is so equalized or balanced that the couplings can be disconnected with little or no danger, since all liability of the couplings to jump or rebound is overcome by such balanced pressure.

In the form shown in Fig. 4 a wall g is formed between the chamber a^2 and cylindrical extension a^3, said wall being provided with a a hole or opening for the passage of the valve-stem g' of the valve G. The valve is composed of a circular disk g^2, formed integral with the valve-stem, said disk being provided with two cylindrical reduced portions $g^3 g^4$, around the former of which fits a disk or ring g^5, forming a base for the bearing-ring g^6, which latter is held in place by a screw g^7. A packing-ring g^8 is secured in a cylindrical opening g^9 of the wall or partition g by a threaded plug g^{10}. An air-escape opening g^{12} is provided in the wall or partition g for the same purpose as the bore F of the other form, said opening being closed by the valve when in its raised position and by a rubber plug $f^\times$ on handle E, said plug being designed to fit over said opening when said valve is lowered.

The operation of my improved cut-off valve is apparent and the advantages thereof will be readily understood by those skilled in the art to which it appertains.

It will be specially noted that the air-hose coupling cannot be safely disconnected without first shutting off said valve, and that when said hose-coupling is so disconnected dirt, cinders, and other foreign substances are prevented from entering the train-pipe.

It will also be seen that when the operating-handle is misplaced from any cause whatever a signal will be given to the trainmen by the escape of air through the vent-openings or by the continuous leaking of the air, causing a reduction in the train-pipe sufficient to effect the setting of the brakes.

I claim as my invention—

1. An air-hose coupling provided with an air-chamber having a lower opening therein, and an upper cylindrical portion, a transverse wall or partition separating said air-chamber and cylindrical portion, a cut-off valve adapted to close said opening and having its stem extended upward through said wall or partition, means for operating said valve, and means for allowing air to pass from said air-chamber to the outer atmosphere, whereby a signal is given when said valve is moved toward or away from its seat, as set forth.

2. An air-hose coupling provided with an air-chamber having a lower opening therein, and an upper cylindrical portion, a gasket placed in said opening, a securing-ring therefor forming a valve-seat, a transverse wall or partition separating said air-chamber and cylindrical portion, a cut-off valve adapted to close said opening and having its stem extended through said wall or partition, means for operating said valve, and means for allowing air to pass from said air-chamber to the outer atmosphere, whereby a signal is given when said valve is moved toward or away from its seat, as set forth.

3. An air-hose coupling provided with an air-chamber having a lower opening therein, and an upper cylindrical portion, shoulders projecting from the inner wall of said air-chamber adjacent said opening, a gasket placed in said opening, a securing-ring therefor extended under said shoulders and forming a valve-seat, a wall or partition separating said air-chamber and cylindrical portion, a cut-off valve having its stem extended through said wall or partition, means for operating said valve, and means for allowing air to pass from said air-chamber to the outer atmosphere, as set forth.

4. An air-hose coupling provided with an air-chamber having a lower opening therein, and an upper cylindrical portion, a transverse wall or partition separating said air-chamber and cylindrical portion and provided with a central chamber, a packing-ring secured in said chamber, a cut-off valve adapted to close said opening and having its stem extended through said wall or partition and said packing-ring, means for operating said valve, and means for allowing air to pass from said air-chamber whereby a signal is given when said valve is moved toward or away from its seat, substantially as set forth.

5. An air-hose coupling provided with an

air-chamber having a lower opening therein, and an upper cylindrical portion, a transverse wall or partition separating said air-chamber and cylindrical portion and provided with a central chamber, a packing-ring located in said chamber, a securing-plug for said packing-ring, a cut-off valve adapted to close said opening and having its stem extended through said wall or partition and said packing-ring, means for operating said valve, and means for allowing air to pass from said air-chamber whereby a signal is given when said valve is moved toward or away from its seat, substantially as set forth.

6. An air-hose coupling provided with an air-chamber having a lower opening therein, and an upper cylindrical portion, a transverse wall or partition separating said air-chamber and cylindrical portion, a cut-off valve adapted to close said opening and having its stem extended through said wall or partition, said valve comprising a circular disk having a bearing-ring secured thereon, means for operating said valve, and means for allowing air to pass from said air-chamber whereby a signal is given when said valve is moved toward or away from its seat, substantially as set forth.

7. An air-hose coupling provided with an air-chamber having a lower opening therein, and an upper cylindrical portion, a transverse wall or partition separating said air-chamber and cylindrical portion, a cut-off valve having its stem extended through said wall or partition, said valve adapted to close said opening and comprising a circular disk having a central reduced portion extending therefrom, a bearing-ring encircling said reduced portion, and a securing-screw for said bearing-ring, means for operating said valve, and means for allowing air to pass from said air-chamber whereby a signal is given when said valve is moved toward or away from its seat, substantially as set forth.

8. An air-hose coupling provided with an air-chamber having a lower opening therein, and an upper cylindrical portion having inclined slots formed therein, a wall or partition separating said air-chamber and said cylindrical portion, a valve adapted to close said opening and having its stem extended through said wall or partition and provided with a squared end, an operating-handle secured to the squared portion of said valve-stem and projected through said inclined slots, and means for allowing air to pass from said air-chamber whereby a signal is given when said valve is moved toward or away from its seat, substantially as set forth.

9. An air-hose coupling provided with an air-chamber having a lower opening therein, and an upper cylindrical portion having inclined slots formed therein, a wall or partition separating said air-chamber and said cylindrical portion, a valve having its stem extended through said wall or partition, an operating-handle for said valve projected through said inclined slots, a flange extending from the casing of said coupling and adapted to engage said operating-handle, and means for allowing air to pass from said air-chamber when said valve is operated, substantially as set forth.

10. An air-hose coupling provided with an air-chamber having a lower opening therein, and an upper cylindrical portion, a transverse wall or partition separating said air-chamber and cylindrical portion, a cut-off valve adapted to close said opening and having its stem extended through said wall or partition and provided with an air-escape opening, and means for operating said valve, as set forth.

11. An air-hose coupling provided with an air-chamber having a lower opening therein, and an upper cylindrical portion, a transverse wall or partition separating said air-chamber and cylindrical portion, a cut-off valve adapted to close said opening and having its stem extended through said wall or partition, said stem having a central bore and upper and lower openings communicating with said bore, whereby an air-passage is formed, and means for operating said valve, as set forth.

In testimony whereof I affix my signature in presence of two witnesses.

SAMUEL R. HEIDELBERG.

Witnesses:
J. H. LE GRAND,
GEO. S. MCGHEE, Jr.