Sept. 7, 1926. 1,599,174

R. T. HAZELTON

SHAPER

Filed June 23, 1922 2 Sheets-Sheet 1

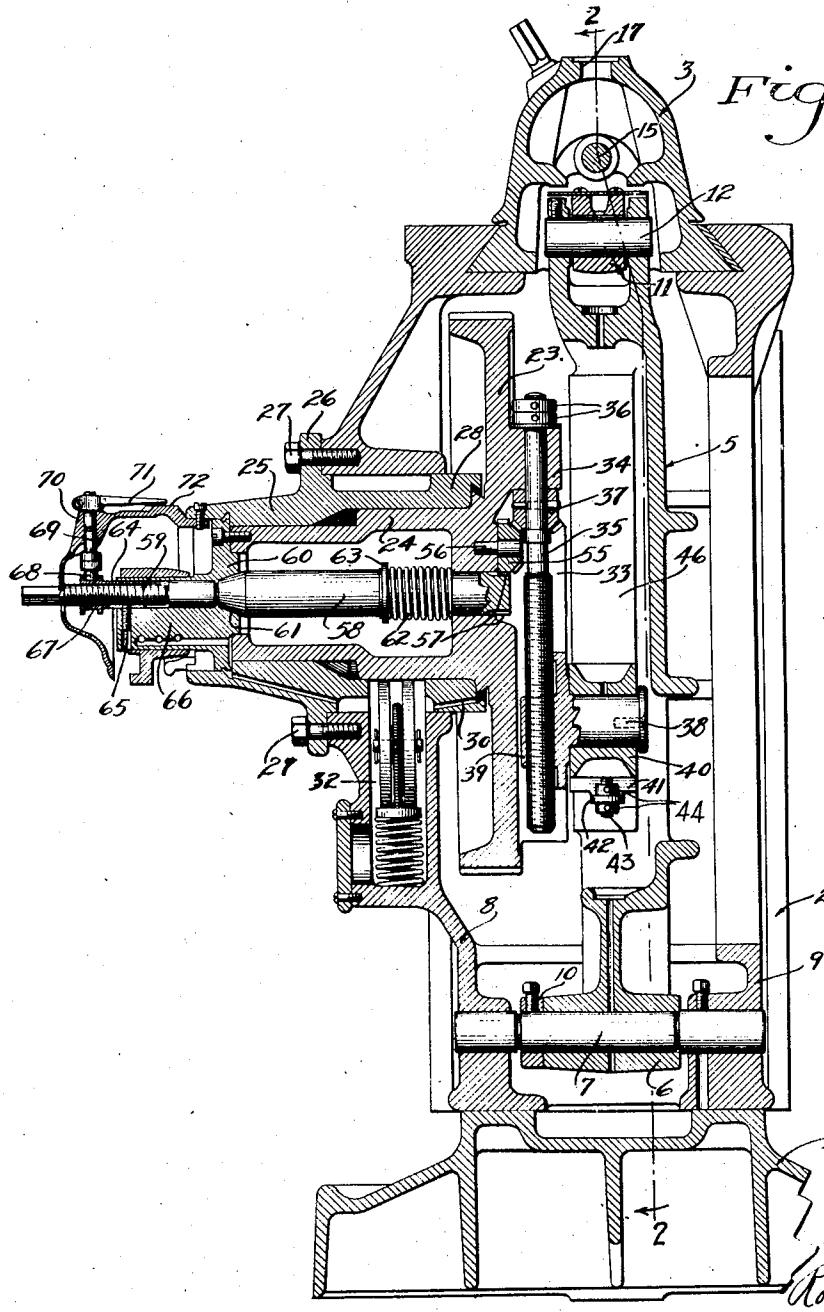

Fig. 1.

Inventor
Robert T. Hazelton

By Wood & Ward

Attorneys

Sept. 7, 1926. 1,599,174

R. T. HAZELTON

SHAPER

Filed June 23, 1922 2 Sheets-Sheet 2

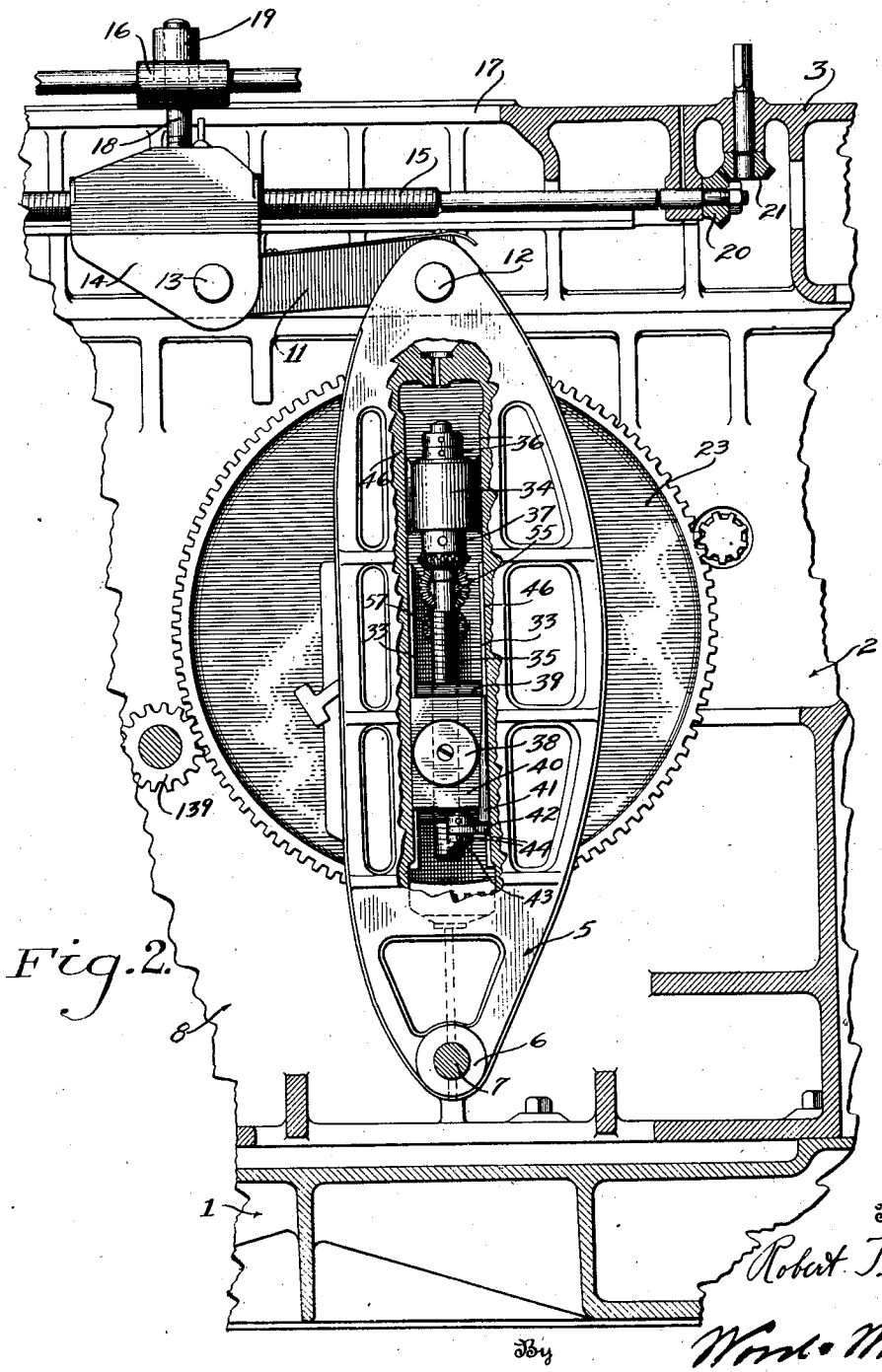

Fig. 2.

Inventor
Robert T. Hazelton

By Wood & Wood

Attorneys

Patented Sept. 7, 1926. 1,599,174

UNITED STATES PATENT OFFICE.

ROBERT T. HAZELTON, OF CINCINNATI, OHIO, ASSIGNOR TO THE CINCINNATI SHAPER COMPANY, OF CINCINNATI, OHIO, A CORPORATION OF OHIO.

SHAPER.

Application filed June 23, 1922. Serial No. 570,299.

My invention relates to an improvement in metal working machines and more particularly to that class of machine known as shapers.

An object of the invention relates to the construction of the crank gear for reciprocating the ram and transmitting the table cross feed transmission mechanism, and to the convenient and effective means for changing the throw of the crank actuating the ram, to dial means by which the degree of crank adjustment is definitely ascertainable, to the system of lubrication feed, in general to details of construction more fully set forth in the description of the accompanying drawings forming a part of this application, in which:

Figure 1 is a view taken transversely of a shaper and showing in detail the crank gear and its adjustable connection to the crank or rocking pitman.

Figure 2 is a detail sectional view taken on line 2—2, Figure 1 further detailing the adjustment means between the gear and rocking pitman.

Referring to the drawings, 1 indicates the base, plate of the machine upon which the main frame 2 is mounted. The upper side or top of the frame is provided with the usual dovetail guideway for longitudinally slidably supporting the reciprocating ram 3.

The ram is reciprocated by a rocking pitman 5 which at its lower end is provided with a hub 6 through which a pivot rod 7 is engaged, having its opposite ends engaged in bearings formed in the opposite side walls 8 and 9 of the main frame which is of hollow structure. The pivot rod is secured against rotation by set screws and the hub of the pitman sustained against lateral movement upon the pivot rod by a collar 10 fixed on the pivot rod, at one side of the hub of the pitman and at the opposite side by a shoulder on the rod. The upper end of the pitman is bifurcated to intermediately receive one end of a link 11 pivotally secured to the pitman by a pin 12 engaged through the limbs formed by the bifurcation of the upper end of the pitman. The opposite end of the link 11 pivotally connects by a pin 13 engaged through the depending ears of a nut 14. The nut 14 is threaded upon a screw rod 15 extending longitudinally within the ram. The rod being suitably journaled at its opposite ends within bearings formed within the ram. The nut 14 provides means for adjustably connecting the ram and pitman and through which the degree extended or overhand position of the forward end of the ram with respect to the work table is made. The nut 14 is locked or clamped to the ram by a clamp block 16 having its lower side seated upon opposite clamping surface formed upon the upper side of the ram bounding a longitudinal slot 17 through the upper wall of the ram through which a screw rod 18 extends, threading with the nut and its opposite end projecting beyond the ram and through the clamp block to receive a locking lever 19. Rotating the screw by the lever 19 clamps the nut rigidly to the ram. For making a ram overhang adjustment, the clamping devices for the nut being released, the screw rod 15 is rotated by means of the bevel gears 20, 21, gear 20 being fixed upon the end of the screw rod 15, and gear 21 upon the end of a stub shaft journaled in the upper wall of the ram and projected through and beyond the same with its projected free end squared to receive a crank hand or other hand tool through which the stub shaft may be rotated.

The pitman is rocked or oscillated by a crank gear 23, which has a tubular counter-turned hub 24 extending from one side, journaled in a bearing sleeve 25. The bearing sleeve 25 being engaged within and through a bearing opening in the front side wall 8 of the main frame, the sleeve having an annular peripheral flange 26 which abuts an annular boss formed on said side wall about the bearing opening, and the bearing sleeve secured to the frame by screws 27 passing through flange and into the side wall. The inner end of the bearing sleeve 25 is recessed with the annular wall forming the recess inclined to provide an annular oil draining channel about a correspondingly edge inclined counter-turn on the hub of the crank gear. The oil at the lower elevation in the channel being drained into an oil reservoir, a cup 32 formed within the front side wall 8 of the frame, through inclined duct or passage 30 in the flange 28 on the end of the bearing sleeve 25. The inner face of the crank gear is provided with a radial guideway 33 formed by a pair of spaced ribs projecting from the side of the crank gear, which terminate at one end by a bear-

ing web or lug 34 for supporting and journaling one end of a radial screw rod 35 which extends centrally within the way formed by said ribs. The screw is sustained against longitudinal displacement by collars 36 fixed to the end of the screw rod and bearing against one side of the bearing lug 35 and by the bevel gear 37 fixed to the screw rod and bearing against the opposite side of the bearing lug. The screw rod has a threaded engagement with a nut crank pin 38 having its nut or head portion 39 as a slide block slidably engaged within the slide way or the inside face of the crank gear. The crank pin 38 journals in a slide block 40 slidable with a longitudinal guideway 46 as a recess formed within the pitman. The slide block in one of its guiding surfaces is provided with a tapered gib plate 41 adjustable longitudinally between the block and its adjacent guide surface on the pitman; to take up for wear and to appropriately fit the slide within its way. The gib plate 41 at its thick or lower end has an angle extension 42 engaging with a set or adjusting screw 43 engaged into the lower end of the slide block, and between a pair of nuts or collars 44 on the screw 43. The slide block and its crank pin are adjusted radially upon the crank gear by the screw rod 35 for changing the throw or oscillating stroke of the pitman and length of reciprocating stroke of the ram.

For adjusting the throw of the crank pin 38, carried by the crank gear 23, the screw 35 is revolved by the bevel pinion 37 fixed upon the screw 35 and in mesh with a bevel pinion 55 journaled upon a stub pin 56 engaged into the crank gear 23. The bevel pinion 55 is provided with spur gear teeth, meshing with the gear teeth 57 on the end of the spindle 58, the rear gear end of which is concentrically journaled within the hub 24 of the crank gear 23. The forward or stem end 59, of the spindle 58, is journaled in a hub cup 60 fixed upon the end of the hub 24 of the crank gear as a unit thereof and rotative therewith. The spindle intermediately is provided with a tapered or conical portion 61 engaging with and frictionally bearing against the surface of a conical seat in the hub cap at the inside face of the cap for positionally withholding the spindle against rotation. The spindle is capable of slight longitudinal motion for releasing its frictional or binding connection with the hub cap for independently rotating the spindle in making a crank throw adjustment or setting. It is held under frictional engagement with the hub cap by means of a spring 62 coiled about the spindle, bearing against a face of the crank gear within the hollow hub thereof and its opposite end engaging against an annular collar or flange 63 on the spindle. The outer end of the stem of the spindle is squared to receive a crank handle or the like hand tool for manually rotating the spindle and a portion of the stem in rear of the squared end is threaded to receive a sleeve nut 64 telescoping into the spindle receiving bore in the cap. The nut is splined and engaged by a screw 65 threaded into a crank stud 66, projecting eccentrically from the hub cap. The sleeve nut 64 provides means actuating a pointer or dial finger, setting or adjusting the crank throw or pitman stroke. The end of the sleeve has an annularly grooved head 67, cooperating with a lever 68 on the inner end of the stem or rock rod 69 vertically journaled in the cover frame 70, fixed to the bearing sleeve 25. The rod projects through the cover frame and carries a pointer or index finger 71 which with the oscillation of the rod caused by the sleeve nut traversing upon the spindle is swung in an arc over the dial 72 upon the upper side of the cover frame 70.

The crank gear 23 is driven by variable speed transmission gearing journaled and housed within a casing secured to the front side of the machine frame and gear compartments formed within the frame, which is not disclosed in detail herewith, forming the subject matter of a separate invention. The transmission gearing is driven by a pulley (not shown) located at the rear side of the machine and transmits motion to a gear 139 in mesh with the crank gear 23.

Having described my invention, I claim:

1. In a machine tool of the character described, a crank gear, having a sleeve hub projecting from one side thereof, a crank pin radially adjustable upon the opposite side of said gear, a screw rod journaled upon said crank gear cooperating with said crank pin for radially adjusting said pin upon said gear, a spindle concentrically journaled within the hub of said gear in transmitting connection with said screw rod, and having a tapered engagement with a seat in said hub for frictionally resisting the spindle rotation.

2. In a machine tool of the character described, a crank gear, having a bearing hub extending from one side, a crank member slidable and radially adjustable upon the opposite side of said gear, a feed screw journaled upon said gear engaging with said crank member for adjusting the same, a rotatable spindle concentrically journaled and extending through said hub and transmittingly connecting with said feed screw, said spindle having a frictional engagement with said hub for resisting spindle rotation and slidable longitudinally for releasing its frictional engagement.

In witness whereof, I hereunto subscribe my name.

ROBERT T. HAZELTON.