March 24, 1931. W. C. PETERSON 1,797,613

DEVICE FOR PRACTICING HARMONICA TECHNIQUE

Filed Jan. 10, 1930

Fig. 2

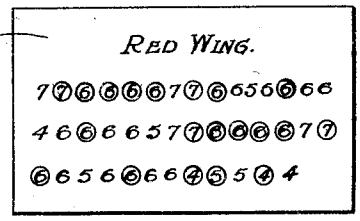

Fig. 1

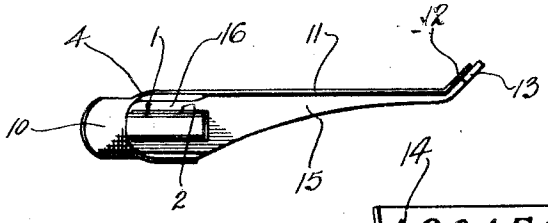

Fig. 3

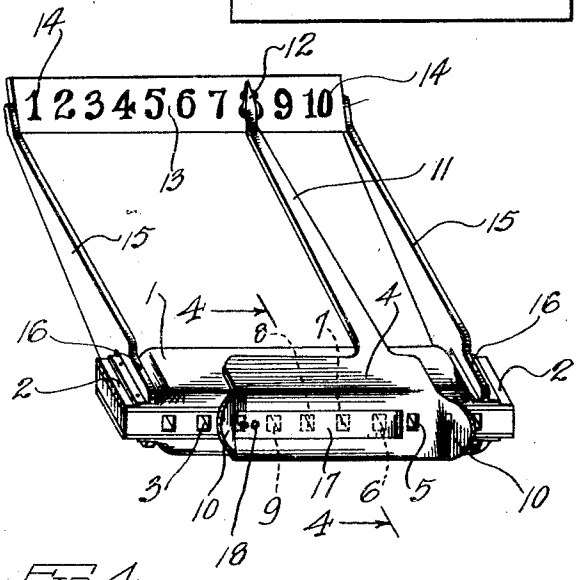

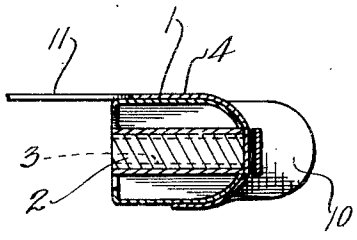

Fig. 4

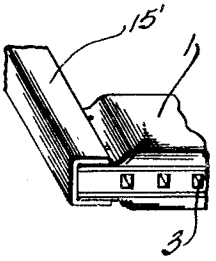

Fig. 6

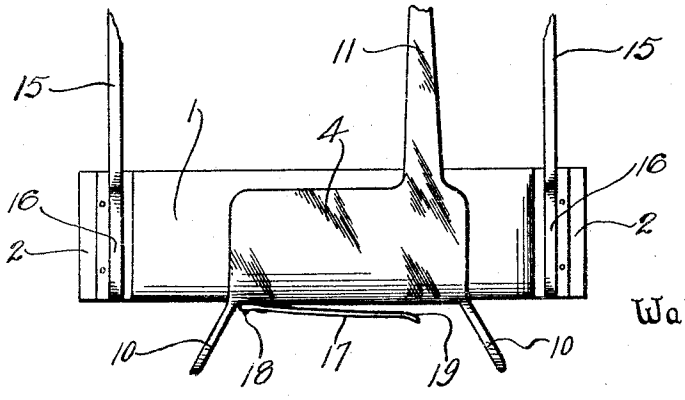

Fig. 5

Walter C. Peterson
INVENTOR

BY Munn & Co

ATTORNEYS

Patented Mar. 24, 1931 1,797,613

UNITED STATES PATENT OFFICE

WALTER C. PETERSON, OF CHICAGO, ILLINOIS

DEVICE FOR PRACTICING HARMONICA TECHNIQUE

Application filed January 10, 1930. Serial No. 419,932.

My invention relates to improvements in devices for practicing harmonica technique, and it consists in the combinations, constructions and arrangements herein described and claimed.

An object of my invention is to provide a device for practicing harmonica technique in which means is provided whereby the device may be associated with an harmonica of standard construction and easily operated by a student, as when practicing. A further object is to provide a device of the type described in which novel means is provided whereby a student may learn to play the melody independently of the bass, and in which novel means is also provided whereby the bass may be practiced simultaneously with the melody.

Other objects and advantages will appear in the following specification, and the novel features of the invention will be particularly pointed out in the appended claims.

My invention is illustrated in the accompanying drawings, forming part of this application, in which

Figure 1 is an end elevation of an harmonica showing my invention associated therewith,

Figure 2 is a diagrammatic view showing a chart embodying symbols representative of a tune and which may be used in connection with my invention,

Figure 3 is a perspective view of my invention as applied to an harmonica,

Figure 4 is a sectional view taken along the line 4—4 of Figure 3,

Figure 5 is a top plan view of my invention, and

Figure 6 is a fragmentary sectional view showing a slightly different form of my attaching structure.

In carrying out my invention, I make use of an harmonica 1 of standard construction and having end portions 2 and openings 3. A selecting device 4 is formed to conform to the cross sectional contour of the harmonica and is arranged for easy sliding movement upon the harmonica when associated therewith, as shown in Figures 3, 4, and 5. The selecting device is provided with a plurality of openings 5 to 9, inclusive. The selecting device is provided with flange portions 10 so that the player may use his cheeks to slide the selecting device 4 over the openings 3.

In Figure 3 I have shown the selecting device as being provided with a pointer 11 having one end 12 arranged substantially in alignment with a plate 13 upon which numerals indicated at 14 are arranged. The plate 13 is associated with arm members 15 which are forked as at 16, whereby the forked portions may be slidably disposed upon the ends of the harmonica and frictionally retained thereto.

It will be noted in referring to Figures 3 and 5, particularly, that I have provided a spring member 17 which is rigidly secured at 18 to the sliding member 4. The spring member may be provided with a suitable sealing member 19, see Figure 5. The sealing member may be formed from leather or any other suitable material and secured to one face of the spring member so that when the latter is pushed into engagement with the sliding member 4, the openings 6 to 9, inclusive, will be effectively sealed.

The opening 5, as will be seen from Figure 3, is open at all times. The openings in the sliding member 4 are spaced apart so that the openings may be accurately aligned with the openings 3 in the harmonica. The openings 3 in the harmonica may be numbered to agree with the numbering upon the plate 13. In other words, when the end 12 of the pointer 11 is arranged in alignment with the numeral 8, the opening 5 in the sliding member 4 will be aligned with the opening 3, which may be numbered 8 in sequence, in the harmonica.

In Figure 2 I have shown a diagrammatic view of a chart 20 which may be used in connection with my invention. The chart embodies certain symbols, which, in the present instance, are arranged to symbolically represent the tune "Red Wing". The numerals surrounded by circles in the diagrammatic view imply that those notes are to be produced by drawing when the opening 5 in the sliding member 4 is in alignment with the openings 3 numbered on the basis of the arrangement

of the numbering upon the plate 13. The other numerals upon the diagram in Figure 2 represent notes which are to be produced by blowing. In other words, the first numeral in the chart is a 7. The sliding member is moved until the pointer 12 is aligned with the numeral 7 upon the plate 13, at which time blowing through the opening 5 in the sliding member 4 will produce that note indicated by the 7 in the chart.

Ordinarily, a beginner should endeavor to learn to play the melody independently of the bass and with a view to this end I have provided the spring member 17 which is shown in Figures 3 and 5. A slight pressure against the member with the tongue will effectively seal the openings 6 to 9, inclusive, in the sliding member 4. When, however, the tongue is pulled away from the spring member, the latter assumes a position indicated in Figure 5.

While I have shown the present invention as being applied to an harmonica having ten openings, which are standardized for harmonicas of the single reed construction, it will be understood of course that my invention is equally applicable to other types of harmonica in which a greater number of openings is employed.

In Figure 6 I have shown a slight modification of the means for supporting the plate 13. The means comprises substantially channel-shaped members 15′ which are arranged frictionally engaging the end portions of the harmonica.

I claim:

1. A device of the type described comprising means adapted to be associated with an harmonica, operatively movable with respect thereto, and provided with an opening, said opening being arranged to be aligned with any one of the openings in the harmonica when said means is moved relatively to the harmonica, a frame associated with the harmonica and having legends marked thereon, pointer means associated with said first-named means and arranged in operative relation with respect to the legends upon said frame, said means being provided with a plurality of additional openings, and means for closing said plurality of openings.

2. A device of the type described comprising means adapted to be associated with an harmonica, operatively movable with respect thereto, and provided with an opening, said opening being arranged to be aligned with any one of the openings in the harmonica when said means is moved relatively to the harmonica, a frame associated with the harmonica and having legends marked thereon, pointer means associated with said first-named means and arranged in operative relation with respect to the legends upon said frame, said means being provided with a plurality of additional openings, and means for closing said plurality of openings, said first-named means being provided with guide flanges.

3. A device of the type described comprising means adapted to be associated with an harmonica, operatively movable with respect thereto, and provided with an opening, said opening being arranged to be aligned with any one of the openings in the harmonica when said means is moved relatively to the harmonica, a frame associated with the harmonica and having legends marked thereon, pointer means associated with said first-named means and arranged in operative relation with respect to the legends upon said frame, said means being provided with a plurality of additional openings, and means for closing said plurality of openings, said first-named means being provided with guide flanges, the openings in said harmonica being provided with legends related to those associated with said frame.

4. A device of the type described comprising means provided with an opening and arranged to be slidably associated with an harmonica, the opening being arranged to be aligned with any one of the openings in the harmonica when said means is moved relatively to the harmonica, said means being provided with a plurality of additional openings arranged to be simultaneously aligned with certain of the openings in the harmonica, and means for opening or closing said plurality of additional openings, independently of said first-named opening.

Signed at Chicago, in the county of Cook, and State of Illinois this 8th day of January, A. D. 1930.

WALTER C. PETERSON.