July 31, 1956 E. C. BOYCKS 2,756,627

ELECTRONIC CONTRAST AREA RATIOMETER

Filed April 1, 1952 4 Sheets-Sheet 1

Fig. 1

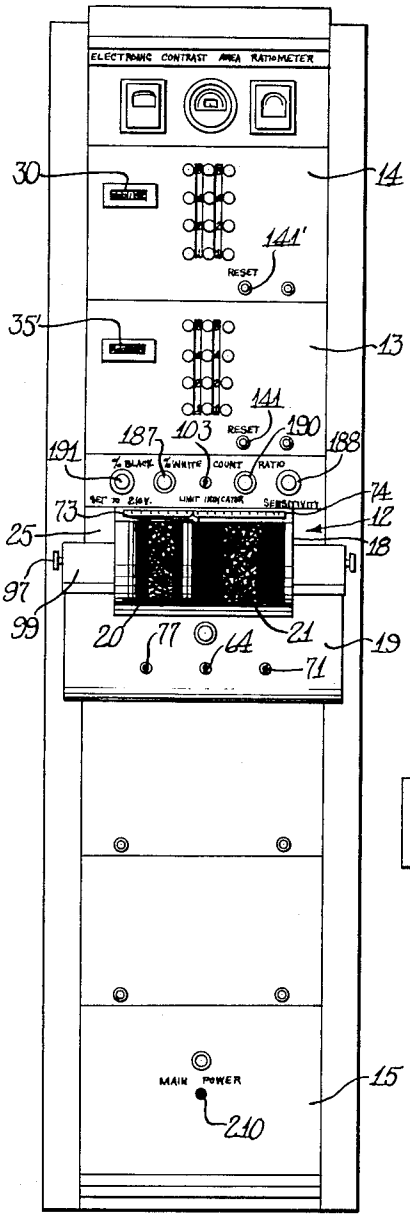

Fig. 2

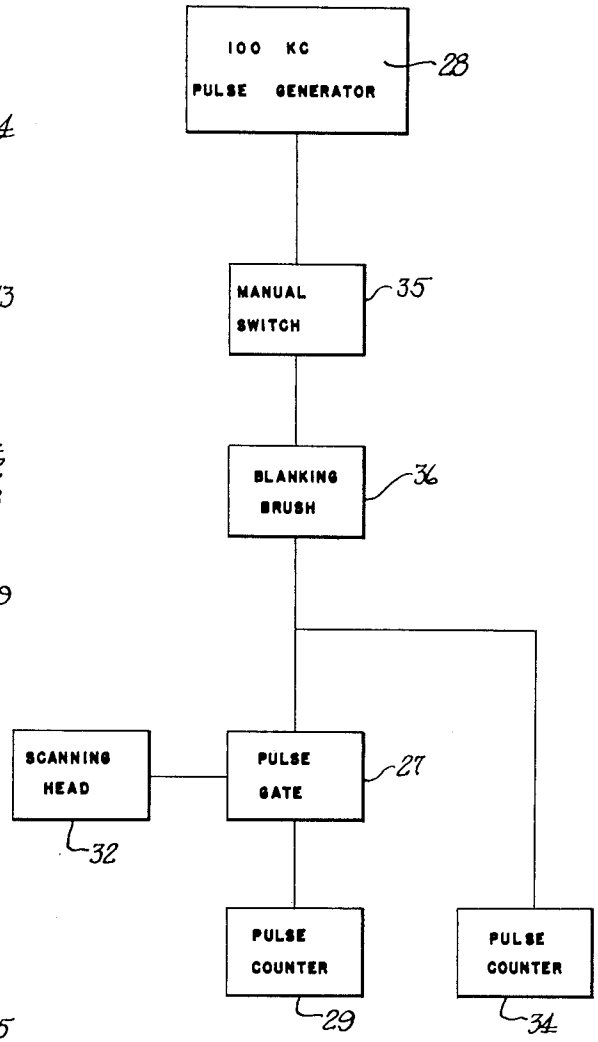

Inventor
Edward C. Boycks
by Hill, Sherman, Meroni, Gross & Simpson Attys

July 31, 1956 E. C. BOYCKS 2,756,627

ELECTRONIC CONTRAST AREA RATIOMETER

Filed April 1, 1952 4 Sheets-Sheet 2

Fig. 3

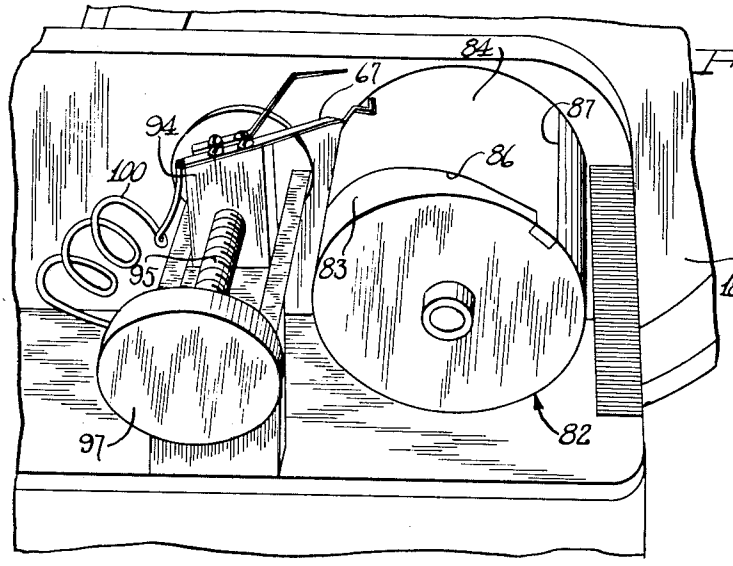

Fig. 4

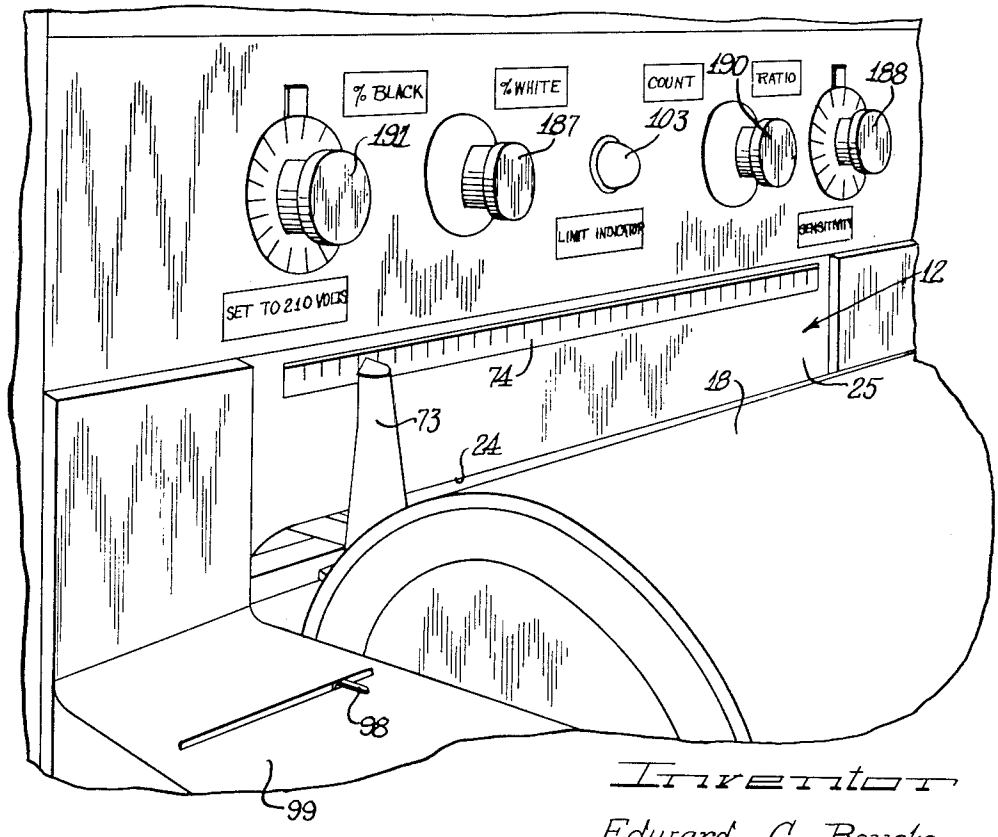

Inventor

Edward C. Boycks

by Hill, Sherman, Meroni, Gross & Simpson Attys

July 31, 1956 E. C. BOYCKS 2,756,627

ELECTRONIC CONTRAST AREA RATIOMETER

Filed April 1, 1952 4 Sheets-Sheet 3

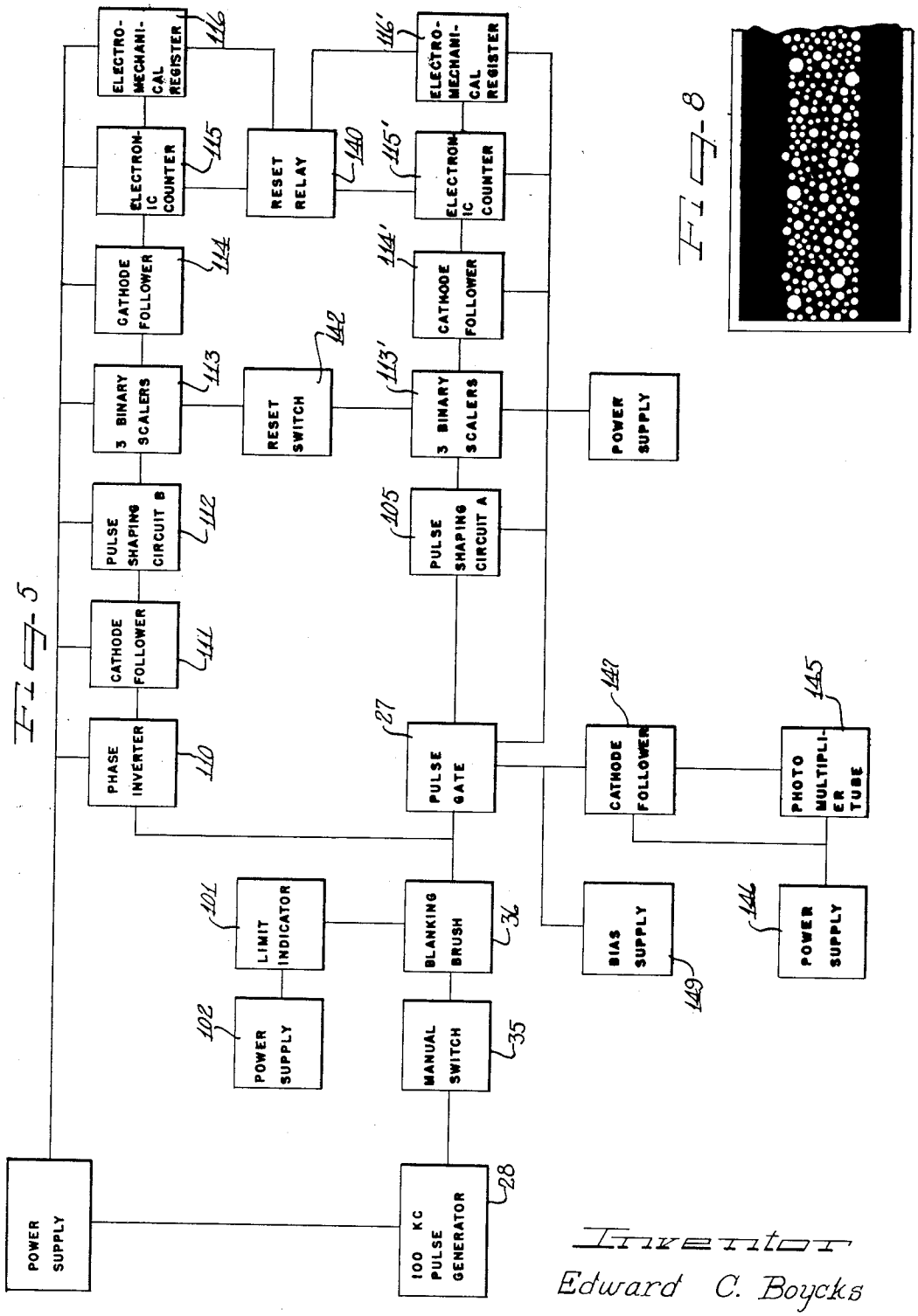

Fig. 5

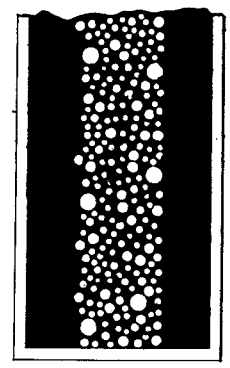

Fig. 8

Inventor
Edward C. Boycks

by Hill, Sherman, Meroni, Gross & Simpson Attys

July 31, 1956 E. C. BOYCKS 2,756,627

ELECTRONIC CONTRAST AREA RATIOMETER

Filed April 1, 1952 4 Sheets-Sheet 4

Fig. 6

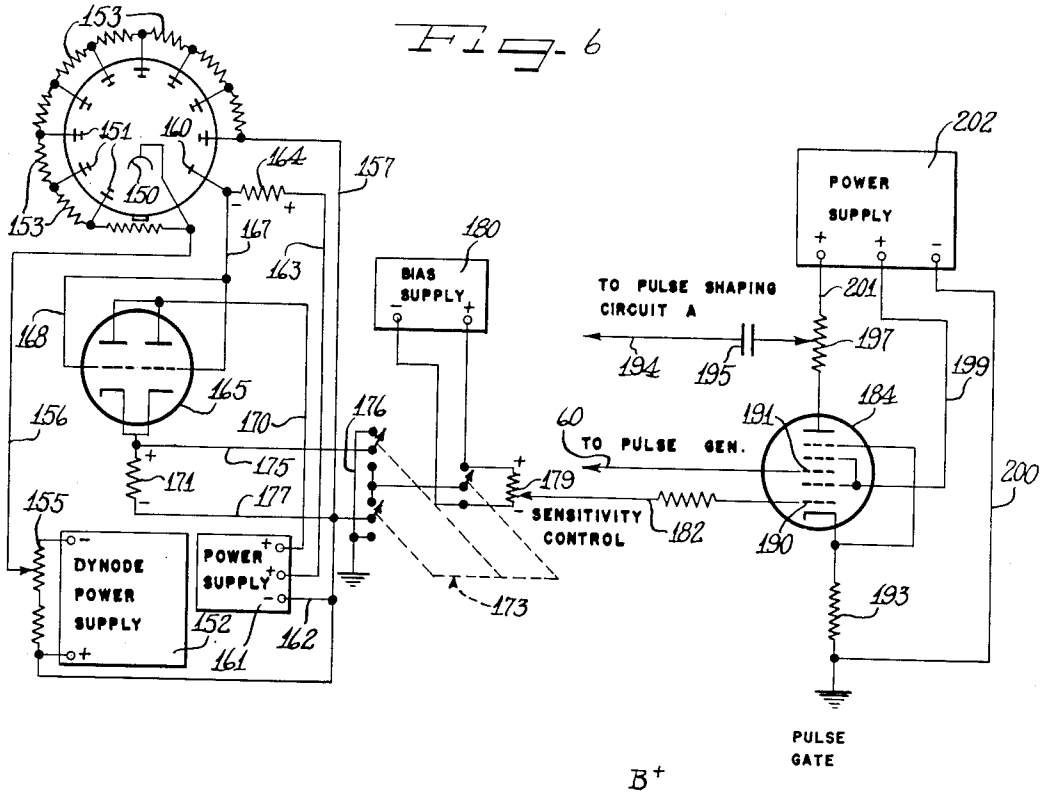

Fig. 7

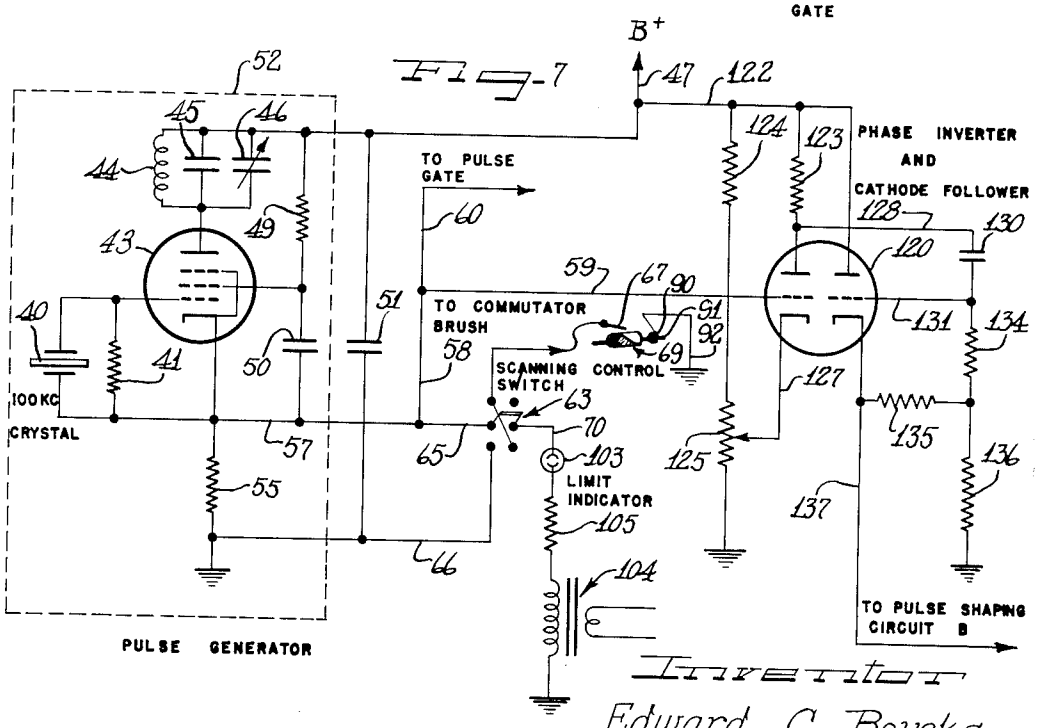

Inventor
Edward C. Boycks

by Hill, Sherman, Meroni, Gross & Simpson Attys

United States Patent Office

2,756,627

Patented July 31, 1956

2,756,627

ELECTRONIC CONTRAST AREA RATIOMETER

Edward C. Boycks, Madison, Wis., assignor to Nekoosa-Edwards Paper Company, Port Edwards, Wis., a corporation of Wisconsin

Application April 1, 1952, Serial No. 279,861

7 Claims. (Cl. 88—14)

This invention relates to means for obtaining a numerical count proportional to the area of an object having light reflective properties within a preselected range, and is directed particularly to a device and method for evaluating the actual volume of wood in a stack.

Pulpwood evaluation has long been recognized by the paper industry as being essential to the most economic utilization of this valuable raw material. In general, the problem has been that of adapting suitable evaluation methods to the wood receiving and handling methods of the individual mill. Inland mills that receive their supply of pulpwood by rail, truck, or both, are faced with the often discouraging problem of obtaining representative samples at a cost in keeping with the value of the wood.

In the manufacture of pulp for paper the factor having the greatest influence on the value of the purchased cord is the amount of sound solid material contained in this unit of measure. In mills where a large percentage of the supply is obtained from small operations in widely scattered areas and the pulp wood is in the form of relatively short bolts, the problem of determining actual wood volume and the percentage of sound wood is particularly difficult. Thus, the need for a quick, inexpensive, yet reasonably accurate method for making such determination is of paramount importance in the industry today. The weight of wood can, of course, be determined by weighing, but this is frequently impractical and also requires that the moisture content of the wood be taken into consideration. A system of sampling for moisture would be necessary for a mill receiving seasoned and partially seasoned wood if the supply was to be purchased on a weight basis. By reason of the varying moisture content of the wood and various other difficulties, the direct weighing of the wood has been regarded as impracticable.

However, from tests on previous shipments of wood of the same species from the same locality, the specific gravity of the wood on an oven-dry basis can be determined. Knowing this specific gravity, the weight of the wood can be determined if the actual wood volume in the cord or shipment is known. It has been found that the actual wood volume in a nominal 128 foot cord may vary between approximately 80 and 105 cubic feet depending on the species of wood, the average diameter and the distribution of the individual diameters of the sticks, and many other factors. The determination of the actual wood volume by customary methods is difficult and usually is based on either estimation by an experienced scaler or by some method of measurement on a sample quantity of wood selected from the entire lot.

It is the primary object of the present invention to provide means by which this actual wood volume can be determined quickly and accurately and with a reasonable amount of labor, both in handling the wood and in determining the volume, and with the least delay in handling shipments of wood as they are received.

Heretofore, in the patent to C. H. Keepers, No. 2,424,619, issued July 29, 1947, it has been proposed to evaluate the actual volume of a stack of wood by photographing the butt ends of the logs and then measuring the area of the butt ends by means of a manually operated geometrical machine.

It is an important object of the present invention to provide novel means for obtaining a numerical count proportional to the area of the butt ends of logs in a photograph by automatic electronic canning.

It is a further important object of the present invention to provide means for determining the actual volume of wood in a stack electronically in an extremely rapid manner, while yet obtaining highly reliable results.

It is a still further object of the present invention to provide means for obtaining a numerical count proportional to the volume of wood in a stack which is extremely simple and which involves a minimum of effort and strain on the part of the operator.

It is a more specific object and feature of the present invention to provide means for obtaining a numerical count indicating the proportion of the area of a photograph having light reflective properties within a preselected range utilizing a synchronously rotating scanner drum and an axially moving scanning head.

It is a further more specific object and feature of the present invention to provide means for obtaining a numerical count indicating the proportion of the area of a photograph having light reflective properties within a preselected range utilizing in combination an electronic gate or coincident pulse determining circuit and a bank of electronic counters.

It is a still further more specific object and feature of the present invention to provide means for obtaining a numerical count indicating the proportion of the area of a photograph having preselected light reflective properties utilizing in combination a synchronous rotating scanner drum, an axially movable scanning head, and an electronic gate or coincident pulse determining circuit controlled by said scanning head to permit actuation of a battery of electronic counters while said head is scanning an area having the selected light reflective properties.

It is a more general object and feature of the present invention to provide means for obtaining a numerical count indicating the proportion of the area of an object having light reflective properties within a preselected range, said means comprising photoelectric means for scanning said object, an electronic signal generator, an electronic coincident signal determining circuit receiving signals from said signal generator and from said photoelectric means, and a counting device connected to the output of said coincident signal determining circuit, said coincident signal determining circuit passing signals from said signal generator to said counting device upon coincidence of signals from the signal generator and from said photoelectric means.

It is a further more general object and feature of the present invention to provide means for obtaining a numerical count proportional to the area having light reflective properties above or below a certain reflectivity of a photograph, comprising photoelectric means for scanning said photograph, an electronic pulse generator, an electronic gate which is open to flow of pulses when actuated by input signals from said photoelectric means of above a preselected level and closed for all input signals of below the preselected level, means for varying said preselected level, means for transmitting the output of said photoelectric means during scanning to said electronic gate to control the opening and closing of the electronic gate, a counting device, and means for actuating said counting device connecting with said counting device through said electronic gate and controlled by said electronic gate to actuate said counting device only when the gate is open.

It is a specific feature of the present invention to provide a novel scanning limit control system.

It is a further specific feature of the present invention to provide in combination a novel scanning limit control system and scanning limit indicator circuit.

It is a further specific object of the present invention to provide a novel system for determining the range of light reflectivity of an object being scanned for which a numerical count is to be obtained.

It is another specific feature of the present invention to provide a novel electronic contrast area ratiometer.

Other objects, features, and advantages of the present invention will be readily apparent from the following detailed description of a preferred embodiment thereof taken in view of the accompanying drawings.

On the drawings:

Figure 1 is a front elevational view of an electronic contrast area ratiometer constructed in accordance with the principles and features of the present invention;

Figure 2 is a block diagram indicating the relation between some of the basic components of the electronic contrast area ratiometer shown in Figure 1;

Figure 3 is a fragmentary perspective view of the blanking brush component utilized for determining the circumferential scanning limits of the scanning system;

Figure 4 is an enlarged fragmentary perspective view of the central exterior of the electronic contrast area ratiometer shown in Figure 1;

Figure 5 is a more detailed block diagram indicating the relation between the various component parts of the electronic contrast area ratiometer of Figure 1;

Figure 6 is a diagrammatic representation of the scanning head and pulse gate portion of the electric circuit of the electronic contrast area ratiometer;

Figure 7 is a diagrammatic indication of the pulse generator, blanking brush, and limit indicator circuits of the electronic contrast area ratiometer; and

Figure 8 is a fragmentary view of a portion of a high contrast photograph such as used with one electronic contrast area ratiometer.

The arrangement of the components of the electronic contrast area ratiometer or ECAR will be apparent from Figures 1, 3 and 4. Referring especially to Figure 1, the ECAR is designated generally by the reference numeral **10** and comprises a cabinet frame **11** receiving a plurality of superimposed component units which may be individually removable and replaceable. These component units include a central scanning section **12**, upper counting units **13** and **14**, and a lower main power unit **15**.

Centrally of the frame **11** is the scanner drum **18** which is rotatably mounted in a protruding housing **19** in front of the scanning section **12**. The housing partially encloses and serves as a guard for the rotating drum. In Figure 1, two photographs **20** and **21** are shown mounted about the periphery of the drum.

Photographs

These photographs may be of the butt ends of a stack of logs piled in a railroad freight car or other transporting vehicle. If the sides of the car obscure a portion of the stack it has been found that a sufficient sampling of the stack can be obtained from a photograph of that part of the stack projecting above the sides of the car. However, railroad cars constructed expressly for shipping pulpwood are now becoming available and these cars have open sides to expose the ends of every log in the stack.

The object of the ECAR is to obtain the percentage of wood in the volume occupied by the stack. Then from a knowledge of the stack volume, the volume of solid wood may be computed. One method of determining the volume occupied by the stack is by photographing the serial number of the car as well as the stack of logs therein. From the serial number, the length and depth of the car can be obtained from the railroad. The length of the logs is customarily taken at 96 inches. The height of the stack above the side of the car could be measured on the photograph and converted into actual height, or the area of the stack above the car could be measured with a planimeter.

The percentage of wood in the volume occupied by the stack is obtained by the ECAR by a process of photoelectric scanning. In this process, a small spot of light is moved over the photograph and light reflected by the photograph is viewed through an image limiting orifice and a microscopic objective by a photoelectric device. As seen in Figure 1, the butt ends of the logs appear white in the photograph while the voids or spaces between the logs appear black. When the scanning spot of light impinges on a white or wood area on the photograph, a relatively large amount of the light is reflected by the photograph and detected by the photoelectric device. When, however, the spot falls upon a black or void area on the photograph, relatively less light is reflected to the photoelectric unit.

By electronic means, the photoelectric cell is made to control an electronic counter, so that the counter will register the relative amount of white or black area on the photograph.

It will be apparent, therefore, that a high contrast photograph having a minimum of intermediate gray tones is desirable when the ECAR is to be used for determining the percentage of wood in a stack. Also it will be apparent that shadows on the ends of the logs should be avoided during the photographing. When the photography is carried out with conventional cameras, it has been found desirable to make two photographs of each car, one of each end, so that the logs are viewed more nearly at right angles to the cut end faces or butt ends thereof. Also, a telephoto lens is useful in permitting the photography at a greater distance.

Scanning

From the above description of the photographs and of how the percentage of white or black on the photograph is detected by moving a small spot of light over the photograph and detecting the amount of such light which is reflected from the photograph, it will be understood that means must be provided for moving the spot of light and photoelectric detector over the photograph, or scanning the photograph.

In the ECAR, a photograph is scanned by mounting the photograph on the cylindrical scanner drum **18** and rotating the drum to move the photograph past the spot and photoelectric unit to scan one dimension of the photograph, while the spot and photoelectric cell constituting the scanning head are slowly moved axially along the drum to scan the other dimension of the photograph. Actually, therefore, the scanner head preferably moves in a helical path relative to the drum and moves across the photograph in a series of spaced paths or lines.

The precise construction of the scanning head utilized in the ECAR forms no part of the present invention and will not therefore be described in detail and has not been shown in the drawings. A scanner head such as commonly used in the field of facsimile transmission has been found to be satisfactory. A typical facsimile scanner head is shown in the U. S. Patent No. 2,560,614, to La Verne C. Walker, dated July 17, 1951.

Such a scanner head is mounted on rails extending parallel with the axis of the drum **18**. The drum is driven by a synchronous motor and the scanner head is moved along its mounting rail in synchronism with the rotation of said drum to advance slightly along said rail with each revolution of the drum. In the ECAR there is a slot **24** in the front wall **25** of the scanner section **12**, Figure 4, so that a segment of the rotating drum is exposed to the scanner head traveling horizontally across the width of the drum within the cabinet. Since the mounting of a scanner head on a rail to move axially along a rotating drum is well known in the facsimile

transmission art and does not per se form a part of the present invention, further description or showing in the drawings of this structure is deemed unnecessary.

General operation

Figure 2 illustrates the general arrangement of the major electronic components according to the present invention. It will be observed that a pulse gate **27** is utilized. This component acts to control the flow of electric pulses from the pulse generator **28** to the pulse counter **29**. When the pulse gate **27** is "open," pulses flow from the pulse generator to the pulse counter **29** and are there counted. A visual indication of this count may be obtained partly by means of the electromechanical register **30** seen in Figure 1 in the uppermost counting section **14**. When the pulse gate **27** is "closed," pulses from the pulse generator do not reach the pulse counter and therefore are not counted.

As indicated diagrammatically in Figure 2, scanning head **32** controls the opening and closing of the pulse gate **27**. Thus, for example, the ECAR can be adjusted so that, when the scanner head **32** is scanning a white area on the photograph **20**, the output from the scanner head will cause the pulse gate **27** to open, while when a black area is being scanned, the pulse gate will remain closed. The pulse counter **29** will thus give a number indicative of the amount of white area on the photograph, or the actual solid wood area in the stack. If now the total number of pulses generated by the pulse generator during a scanning operation is known, the percentage of white area on the photograph can be readily determined. The preferred manner of obtaining this total pulse count is by means of a second total pulse counter **34**, Figure 2, connected to the pulse generator ahead of the pulse gate **27** so as to receive all pulses sent out by the pulse generator **28**. This total pulse counter **34** is housed in the counting unit **13** in Figure 1 and includes the electromechanical register **35'** seen in Figure 1.

In the present embodiment of the invention, a manual switch **35** serves to apply pulses from the pulse generator to the input of the pulse gate when the scanning head has reached the portion of the photograph which is to be scanned, and to interrupt the pulses to the pulse gate when the head has covered the area of the photograph to be scanned. The switch **35** thus controls the axial scanning limits of the head across the width of the photograph.

Since the photograph will not extend entirely around the circumference of the drum, it is also necessary to interrupt the pulse generator while the head is scanning between the ends of the photograph on each revolution of the drum. These circumferential scanning limits are controlled by the blanking brush **36** indicated schematically in Figure 2.

Pulse generator

The pulse generator, as indicated in Figure 7, may be of the tuned-grid tuned-plate type with a 100,000 cycle per second crystal **40** supplying the grid tuned circuit. A grid resistor **41** shunts the crystal and is connected between the control grid of the pentode tube **43** and the cathode thereof. The tuned-plate circuit includes fixed inductance **44**, fixed capacitance **45** and a variable capacitance **46**. The plate voltage is supplied from the conductor **47**, the screen grid voltage being provided through resistor **49**. A by-pass condenser **50** is connected between the screen grid and cathode and a further by-pass condenser **51** is connected from the plate tuned circuit to ground. The pulse generator may be enclosed in a soft iron shield indicated by the dash line **52**.

The output from the pulse generator is taken across the resistor **53** which may for example have a resistance of 250 ohms. The output is delivered to a phase inverter and cathode follower circuit by means of conductors **57**, **58** and **59** and to the pulse gate circuit through conductors **57**, **58** and **60**.

Manual switch

The significance of the manual switch **35** in Figure 2 may now be understood. This block in the diagram of Figure 2 corresponds to the scanning control switch **63** shown in Figure 7 and is the center switch **64** in Figure 1. One section of the switch is connected to the high end of the pulse generator cathode resistor **55** through conductors **57** and **65**. In the lower position of switch **63** as seen in Figure 7, the resistor **55** is shorted out through conductors **57**, **65**, switch **63** and conductor **66** so that there is no output from the pulse generator. It will be understood, however, that the pulse generator continues to oscillate and that its operation is not substantially affected by shorting out resistor **55** because of the low resistance thereof. In the upper position of switch **63**, the high end of resistor **55** is connected to the brush **67** of a commutator or blanking brush assembly **69**. This commutator assembly **69** corresponds in the block diagram of Figure 2 to the blanking brush block **36**. The other section of switch **63** serves to connect the commutator brush **67** to the limit indicator conductor **70**.

The method of determining the axial limits in the present embodiment of the ECAR will now be understood. After the photograph has been mounted on the scanner drum **18**, for example with the long axis of the photograph extending around the circumference of the drum, the scanning head exciter lamp is turned on (by switch **71** in Figure 1) so that a spot of light will be visible on the drum. In the present ECAR the scanner head carriage may be disengaged from its drive and moved axially along the dum until the spot of light from the exciter lamp of the scanner head strikes the left border of the area on the photograph to be scanned. The position of the scanning head at this time is indicated by pointer **73**, Figure 4, which is mounted on the scanning head carriage and projects through the slot **24** in scanning section **12**. A scale strip **74** is mounted on the front wall **25** of the scanning section **12**, Figures 1 and 4, for accurately indicating the position of the head. The scale reading corresponding to the left limit on the photograph is recorded and the scanner head carriage is moved to the right border of the area to be scanned. The right limit scale reading is also recorded. In the case of photographs of a stack of wood, the limits are chosen so that the dot of light from the scanner head is well within the wood area, so that an accurate sample will be obtained.

To begin scanning, the head is moved to the left of the left scanning limit on scale **24** and the scanner drum driving motor is turned on (by switch **77** in Figure 1). When the pointer **73** reaches the left limit on scale **74**, the scanning switch **64** is thrown to move manual switch **63** in Figure 7 to the upper position. In this position the output from the pulse generator is not shorted out through conductors **65** and **66**, so that pulses are delivered to the pulse gate **27** and pulse counter **34** (Figure 2) under the control of the blanking brush assembly **69** as will hereinafter be described. When the pointer **73** reaches the right scanning limit the center switch **64** in Figure 1 is thrown to move switch **63** in Figure 7 to its lower position to short the output resistor **55** once more.

It will be understood that the manually controlled axial scanning limits could be controlled automatically by the use of limit switches. Thus the left and right scanning limits would be selected by suitable adjustment of a pair of knobs which in turn would position the limit switches. The scanning head would then be pushed against the left limit switch and from this point operation would be completely automatic. After a momentary contact push button had been depressed, the drive motors would start, scanning would begin and would cease at the proper positions of the scanning head, and the drive motors would shut off at the completion of the run.

When the photograph shows all the sticks as would be the case with a railroad car having open sides, the white count is proportional to the total wood volume. Thus, the white count is simply multiplied by a single proportionality constant to obtain total wood volume, without the necessity for knowing the stack volume or dimensions of the car.

Blanking brush

The blanking brush assembly is best shown in its physical structure in Figure 3 and comprises a commutator drum **82** which is mounted for rotation with the scanner drum **18**. The function of the assembly is to automatically control the circumferential limits of scanning, that is to "blank" out the pulse generator during the time when the scanning head is scanning between the ends of the photograph. To accomplish this, the blanking brush assembly will ground the high end of the output resistor **55** of the pulse generator while the scanning head is scanning off the photograph, so that no pulses will arrive at the pulse gate **27** in Figure 2 or the pulse counter **34**. Referring to Figure 2, the blanking brush **36** thus acts effectively as a valve allowing pulses to flow through only while the scanning head **32** is scanning a certain selected portion of the circumference of scanner drum **18**.

The purpose of the blanking brush is thus to adjust scanning for different length photographs. For convenience one end of the area is always positioned at the same location on the drum **18** and the other end of the area to be scanned will thus fall at different positions about the circumference of the drum **18**. The commutator drum **82** is made of conducting material, but has a portion of its curved surface routed out and filled with a non-conducting material. As seen in Figure 3, the portion **83** of the curved surface is conducting while the portion **84** is non-conducting. The conducting surface portion **83** has a generally helical inner margin **86** and a straight axially extending margin **87** at one end. The cylinder may for example be made of brass and the routed portion filled with an acrylate polymer.

For grounding the high end of the output resistor **55**, the conducting portion of the commutator cylinder **82** may be grounded by means of a ring **90** on the shaft **91** and a brush connected by conductor **92** to ground as indicated in Figure 7. The commutator brush **67**, Figures 3 and 7, is adapted to make contact with the circumference of the drum and to be grounded while contacting the conducting portion **83** thereof to "blank" out the pulse generator output. The straight margin **87** of the conducting portion **83** thus establishes one circumferential scanning limit, while the other circumferential limit depends on where the brush **67** strikes the generally helical margin **86** of the conducting portion **83**.

The second limit may be adjusted by shifting the brush **67** axially along the commutator drum. To this end, the brush **67** is carried on a block **94** which is axially adjustable by means of a threaded shaft **95** to which is secured adjustment knob **97**. The knob **97** and pointer **98** carried by block **94** are visible in Figures 1 and 4, respectively, since they project through the blanking brush casing **99** which normally encloses the blanking brush assembly. The lead **100** connecting the scanning switch **63** to the brush **67** is coiled to permit the axial movement of brush **67**.

It will be understood that with the blanking brush described, one end of the area of a photograph to be scanned is positioned on the drum to correspond to the margin **87**, while the brush **67** is adjusted to just contact the helical margin **86** at the other end of the margin to be scanned. This latter adjustment is facilitated by the limit indicator.

Limit indicator

The relation of the limit indicator to the other ECAR units is indicated generally in Figure 5, the reference numeral **101** designating the limit indicator and **102** designating its power supply. As seen in Figure 7, when the scanning control switch **63** is in its lower position, the commutator brush **67** is connected to the limit indicator lead **70**. The limit indicator circuit includes a neon bulb **103** which is caused to glow when the brush **67** is contacting the conducting portion **83** of commutator drum **69**. Voltage is supplied by an isolation transformer **104** through resistance **105**. The bulb is visible from the front of the ECAR cabinet just above the scanner section **12**.

Thus to determine the variable circumferential scanning limits, the photograph is mounted on the drum with one end of the area to be scanned fixed in an angular position to coincide with the straight margin **87** on the commutator **82**. The exciter switch **71** is then closed to cause the scanning spot to shine on the drum. The drum is then rotated until the spot strikes the other end of the area of the photograph to be scanned. The knob **97** is now turned to move the brush **67** to the helical margin **86** of the commutator **82**; at this point the limit indicator bulb **103** should go on and off as the knob **97** is turned slightly back and forth. The circumferential scanning limits are now established and the commutator drum will automatically blank out the pulse generator during the portion of each revolution of the scanner drum when the scanning beam is off the area of the photograph to be scanned.

Total pulse counter

One arrangement of circuits comprising the total pulse counter **34** of Figure 2 is indicated in the block diagram in Figure 5 and comprises a phase inverter **110**, cathode follower **111**, pulse shaping circuit B, **112**, binary scalers **113**, cathode follower **114**, electronic counter **115** and electromechanical register **116**. It will be understood, however, that this particular arrangement is described merely by way of example and not by way of limitation, since many other counting circuits could be utilized. Furthermore, a total pulse counter is not necessary, for example, if a fixed area is to be scanned for which the total number of pulses can be computed, or if an all white or black calibrating photograph is first scanned using the selected scanning limits so that the proportion pulse counter **29** may be employed to obtain the total count.

Phase inverter and cathode follower

Since the output of the pulse generator, in the present embodiment, consists of a series of positive pulses while the driving circuit **112** for the scaling units **113** require negative pulses, the phase inverter stage **110** has been utilized. A suitable circuit has been shown in Figure 7 and include a twin triode tube **120**. The output from the pulse generator is fed into the grid of the first triode stage by conductor **59**. The plate voltage is supplied to the tube from conductor **122** through resistor **123**, and the grid bias is adjusted by means of fixed resistor **124** and potentiometer **125**, the cathode lead **127** being connected to the moving contact of the potentiometer. The output from the tube's first stage is delivered to the grid of the second stage by means of conductor **128**, capacitance **130**, and conductor **131**. The resistors **134**, **135** and **136** suitably adjust the grid bias for the second stage of tube **120** to operate as a cathode follower, the output being taken from the cathode by conductor **137**.

The cathode follower stage represented by block **111** in Figure 5 is utilized to decrease the impedance of the output of the preceding stage so that a relatively large current drain or the like will not alter the waveform of the output signal. All the cathode follower stages utilized in the present embodiment have substantially this purpose.

Other pulse counter units

The binary scalers **113** utilized in the present ECAR (manufactured by the General Electric Company as type 4SN1A3) are scale-of-two counters and are used to scale down the pulses from the pulse generator to within the maximum speed of the mechanical register **116**. The

total number of counts presented to these units **113** may be read by indicator lamps. The pulse shaping circuit B, **112**, is a driving circuit for the binary scalers suggested by the manufacturers.

The cathode follower **114** functions to prevent overloading and the like and may utilize a conventional circuit.

The electronic counter **115** at present comprises three decade scaling units (furnished by the Potter Instrument Company, Inc. as model No. 330). The pulse shaping circuit for these units was found to be unnecessary. The counter **115** is arranged to form a scale of 1000. Since each binary scaler allows only one out of two suitable pulses which enter it to pass, and there are three binary scalers, only one out of eight pulses will reach the counter units. At 100,000 pulses per second, 12,500 pulses will thus reach the electronic counter **115**. These units scale the 12,500 down by 1000 so that only 12.5 pulses per second reach the mechanical register **116**. (The electromechanical register used in the present embodiment is manufactured by the Atomic Instrument Company as model 1238.) Since counter **115** can be read by means of neon lamps, it is possible to read three significant figures from the units used in the embodiment disclosed in addition to those displayed by the electromechanical register.

Reset relay

The reset relay **140** shown in Figure 5 comprises a relay possessing four separate sets of contacts, two make and two break, with the leads from the electronic counter **115** and the electromechanical register **116** wired into the appropriate contacts. As a result, these units may all be reset together simply by operating the reset relay by means of a single momentary contact button **141**, Figure 1. A reset switch **142** is indicated in Figure 5 for resetting the binary scalers **113** to "zero count" if desired. Since these units usually indicate the seventh and eight significant figures, they would not ordinarily be read for the present purpose except as an aid in maintenance.

Scanning head circuit

As seen in Figure 5, the present embodiment, the scanning head circuit includes a photomultiplier tube **145**, power supply **146**, cathode follower **147** and bias supply **149**. Referring to Figure 6, the electric circuit is indicated in more detail. The light reflected from the scanning beam is directed onto the cathode **150** which has a photoemissive surface. The electrons emitted by the cathode are attracted to the first accelerator dynode **151** which has a surface which is a good secondary electron emitter. Successive dynodes **151** are maintained at correspondingly higher voltage by means of dynode power supply **152** and bleeder resistors **153** so that the signal generated by the reflected light is progressively multiplied. The dynode voltage is supplied through voltage divider **155** and conductors **156** and **157**. The final collector dynode **160** is maintained at a potential above the high side of the dynode power supply **152** by the power supply **161** through conductors **162** and **163**, and 330,000 ohm resistor **164**.

The photomultiplier output voltage appearing across the resistor **164** is applied in parallel to the grids of the twin triode tube **165** by conductors **167** and **168**. Plate voltage is supplied to both sections of tube **165** in parallel from power supply **161** through conductor **170**. The tube **165** is operated as a cathode follower and the output is taken from resistor **171**. It will be observed that switch **173** is arranged to ground either side of the resistor **171** to the chassis of the instrument.

The purpose of the switch **173** is to make possible the counting of either the black or white area of the photograph. When conductor **175** from resistor **171** is grounded through conductor **176** with the switch **173** in the position shown, the output is delivered by conductor **177** to the high side of the bias supply circuit. Since the bias supply resistor **179** thus provides a negative bias voltage in conjunction with bias supply **180**, the scanning head output from resistor **171** is shifted in the negative direction. If, for example, the scanning head output swing is from plus 10 to plus 130 volts and the bias supply introduces a negative voltage of 70 volts, the resultant swing at the pulse gate grid lead **182** will be from minus 60 to plus 60 volts. If the gate grid cuts off the gate tube **184** at about minus 10 volts, any signal at the grid from minus 10 to plus 60 volts will "open" the gate. This corresponds to a signal at the resistor **171** between plus 60 to plus 130 volts. It is apparent that such a signal would be produced while the phototube is scanning a surface having a relatively high reflectivity, such as a white surface.

If the switch **173** is thrown to its lower position, the low end of resistor **171** is grounded through conductor **177**, while the high end of resistor **171** is connected to the low end of the bias supply circuit through conductor **175**. The bias potentiometer **179** now tends to introduce a positive bias voltage, while the resistor **171** tends to introduce a negative signal to the grid of the gate tube **184**. If the output swing from resistor **171** is from minus 130 to minus 10 volts, and if the bias supply potentiometer **179** is adjusted to give a positive bias of 70 volts, the net swing on the grid of the gate tube **184** will again be from minus 60 to plus 60. However, it will be apparent that only signals from the resistor **171** between minus 10 and minus 80 volts will "open" the gate for a cut off of minus 10 volts for gate tube **184**. This signal corresponds to a low reflectivity surface such as a black surface on the photograph being scanned.

As seen in Figures 1 and 4, a knob **187** is mounted above the scanner section for operating the switch **173**, while knob **188** controls potentiometer **179**. The "count-ratio" knob **190** may be used to cause only pulse counter **29** in Figure 2 to be operated in one position, while causing both pulse counters **29** and **34** to be operated in the other position. The left knob **191** in Figures 1 and 4 may be used to control the output voltage of the electronically regulated power supplies which furnish power to some of the stages of the ECAR.

It will be apparent that the bias potentiometer **179** is effective to vary the sensitivity of the pulse gate tube **184** to varying degrees of reflectivity. If for example, only areas having very low reflectivity were to be detected, the bias voltage supplied by the bias supply circuit would be raised by adjusting potentiometer **179** with the switch **173** in the lower "% black" position.

Pulse gate

From the foregoing description of the scanning and pulse generator circuits, it will be understood that the cathode control grid **190** of the pentode gate tube **184** is supplied with a signal from the scanning head by means of lead **182**, while the pulse generator supplies a stream of pulses to the signal grid **191** by means of conductor **60**. It will be understood by those skilled in the art that if the cathode control grid **190** is below cut-off voltage, there will be no flow of electrons from cathode to plate and pulses from the pulse generator will not appear in the tube output circuit. On the other hand if the cathode control grid **190** is above cut-off potential, the signal or plate control grid **191** will control the distribution of current between the control grid and plate so that the pulse generator signal is amplified in the plate output circuit. In the particular circuit illustrated, the gate pulses from the scanning circuit are substantially eliminated by degeneration in the unby-passed cathode resistor **193**. The amplified pulse generator signal is delivered to pulse shaping circuit A through conductor **194** and capacitance **195** from potentiometer **197** in the plate circuit. Voltage is supplied to the screen grids and plate by means of conductors **199**, **200** and **201** from power supply **202**.

Since the signal delivered to the pulse shaping circuit A will be negative, no phase inverting circuit is necessary. The counting circuits following pulse shaping circuit A, indicated by reference numeral 205 in Figure 5, are identical to those hereinbefore described in connection with the total counting assembly and have been given corresponding primed reference numerals.

Operation

The operation of the described embodiment of my invention will now be readily understood. Since the embodiment disclosed is particularly adapted for obtaining a numerical proportion indicating the per cent of wood or void in a stack of wood, the operation will be described as it would be applied to such a determination. However, it will be understood that the principles and features of the present invention are readily utilized for many other determinations. By way of example, and not by way of limitation, the following other uses fall within the scope of the present invention:

1. Determining the ink covering on many types of printed matter such as bread-wrappers, posters, etc.

2. Determination of the area of an irregularly shaped object as found on aerial photographs. Area of land under tillage, timber stands (sometimes by species), and lakes and streams are examples.

3. Determining the area of the surface of a leaf, useful in the study of the effect of poisons, etc.

4. Making a blood count from a photomicrograph.

5. The dirt (count) for paper could be determined and the dirt specks could be graded as to size and color.

Having secured a high contrast photograph of the ends of a stack of logs or the like, the positive of this photograph may be mounted on the scanner drum 18, the ends of the logs appearing as white areas on the photograph. The ECAR is now placed in readiness for use by manipulating the main power switch 210 at the bottom of the ECAR, the counters are reset by means of button 141 or 141', the count-ratio knob 190 is turned to ratio, the sensitivity knob 183 and the voltage dynode knob 191 are suitably positioned, and the per cent black and the per cent white knob 187 is turned to per cent white to measure the ratio of actual wood to stack volume. The exciter lamp switch 71 is switched on so that the scanning spot appears on the drum.

The left axial scanning limit is selected by moving the scanner head until the spot of light impinges on the photograph at the left limit of the area to be scanned. The position of the pointer 73 relative to the scale 74 is noted and the procedure is repeated for the right scanning limit on the photograph. The scanning control switch 64 being in its limit indicator position, the drum is rotated until the spot of light is on the desired circumferential scanning limit on the photograph, and then the knob 97 is turned to move the brush 57 to the margin 86 between the conducting portion 83 and the non-conducting portion 84 of the commutator drum 82 (Fig. 3), this position being indicated by the limit indicator bulb 103 (Fig. 4).

To begin scanning, the disengaged scanning head is moved until the pointer 73 is about 1/5 centimeter to the left of the left scanning limit on the scale 74. The carriage drive is then reengaged and the scanner drum motor is switched on by means of a switch 77. The scanner switch 64 is switched to scanning position when the pointer 73 reaches the left scanning limit on the scale 74. When the scanning beam impinges upon a white area of the photograph within the scanning limit, the signal from the scanning head will open the pulse gate 27 (Fig. 2) and pulses from the pulse generator 28 will be counted by the pulse counter 29. When the scanning spot impinges upon areas of low reflectivity, representing voids between adjacent logs in the stack, no signal will be delivered by the scanning head 32 to the pulse gate 27 and the pulse gate will remain closed so that no pulses from the pulse generator 28 will reach the pulse counter 29. Whenever the scanning beam is within the scanning limits on the photograph, the pulse generator 28 is delivering pulses to the pulse counter 34. The blanking brush 36 operates to blank out the pulse generator 28 whenever the scanning beam is off the circumferential scanning limits on the photograph. When the pointer reaches the right scanning limit on the scale 74, the scanning switch 64 is actuated to blank out the pulse generator. The white area count may now be read from the electromechanical register 30 and from the electronic counter 115', while the total scanning count is read on the electromechanical register 35 and the electronic counter 115 (Fig. 5).

From this ratio, and the volume occupied by the stack, the actual volume occupied by solid wood can be computed, and from the density of the wood, the actual weight of the stack is readily determined.

If desired, by way of a test, the per cent of voids in the stack can be determined by turning the knob 187 to the per cent black position, and suitably adjusting the sensitivity knob 183 if necessary.

While there has been described a particular form of pulse gate, it will be understood that broadly the invention comprises varying any signal which is susceptible to a numerical count in accordance with the output from a scanning head in such a manner that for outputs from a scanning head outside a given range, no counting signal will arrive at the pulse counter. Further, it will be apparent to those skilled in the art that the pulse generator can take many different forms and generate many different signals, especially since the counting circuit can be utilized to convert the counting signal into a suitable pulse signal or the like which can be counted by electronic counters. Essentially, therefore, the pulse generator furnishes a counting signal while the scanning head furnishes an enabling signal, and the pulse gate acts as a coincident signal determining circuit for passing a suitable counting signal to a counting circuit only when the enabling signal is present.

Further, the present invention is not necessarily limited to the scanning of photographs, since it can be used in conjunction with other objects which can be suitably scanned whether photoelectrically or by means of an electron beam or the like. There is thus provided according to the present invention means for obtaining a numerical count indicating the proportion of the area of an object having properties within a preselected range, comprising means for scanning said object and for generating a scanning signal in accordance with said properties, an electronic counting signal generator, an electronic coincident signal determining circuit receiving signals from said signal generator and from said scanning means, and a counting device connected to the output of said coincident signal determining circuit, said coincident signal determining circuit passing countable signals from said signal generator to said counting device upon coincident of signals from said signal generator and said scanning means, and said counting device being actuated by counting signals traveling from said signal generator through said coincident signal determining circuit.

While I have resorted to details in the description of my invention for the sake of clarity, it will, of course, be understood that many modifications with respect to the various details will suggest themselves to those versed in the art, and I, therefore, contemplate by the appended claims to cover all such modifications which fall within the true spirit and scope of my invention.

I claim as my invention:

1. In combination, a rotary scanning drum, a photoelectric scanning head for moving axially across said drum, a pulse generator, a coincident signal determining circuit connected with said pulse generator and with said scanning head, a pulse counter connected to the output of said coincident signal determining circuit, a commutator connected to said drum for rotation therewith, and a blanking brush cooperating with said commutator and

connected to said pulse generator for electrically interrupting the pulse from said signal generator to said coincident signal determining circuit during a portion of each revolution of said scanning drum.

2. In combination with a photoelectric scanner tube, a cathode follower circuit connected to the output of said scanner tube, a cathode output resistor in said cathode follower circuit, a power supply supplying voltage to said cathode follower circuit, conductor means connecting one end of said output resistor to the said power supply, a pulse gate tube controlled by said scanner tube output, a bias supply resistor in the control grid circuit of said pulse gate tube, and switch means for selectively connecting said one end of said cathode resistor to one end of said bias supply resistor and said other end of said cathode resistor to the other end of said bias supply resistor for selectively reversing the polarity of the cathode resistor output to said pulse gate grid.

3. In combination with a photoelectric scanner tube, a cathode follower circuit connected to the output of said scanner tube, a cathode output resistor in said cathode follower circuit, a power supply supplying voltage to said cathode follower circuit, conductor means connecting one end of said output resistor to the said power supply, a pulse gate tube controlled by said scanner tube output, a bias supply potentiometer in the control grid circuit of said pulse gate tube, and switch means for selectively connecting said one end of said cathode resistor to one end of said potentiometer and said other end of said cathode resistor to the other end of said potentiometer for selectively reversing the polarity of the cathode resistor output to said pulse gate grid, said potentiometer varying the sensitivity of said pulse gate tube to a given scanner tube output voltage.

4. In combination, a rotary scanner drum having means for receiving and positioning an object thereon having a surface to be scanned of an extent less than the circumference of said scanner drum whereby when the object is wrapped about the periphery of said scanner drum, a portion only of the periphery of the scanner drum underlies the surface to be scanned, a commutator drum for rotation with said scanner drum having a conducting surface with a generally axially extending margin and an opposite obliquely extending margin, a commutator brush movable axially of said commutator drum to intersect said oblique margin at a point displaced from said generally axially extending margin by an angle corresponding to the angle subtended by said portion of the scanner drum periphery underlying the surface to be scanned, a signal generator connected with said commutator brush for control thereby, said commutator brush electrically interrupting the signal from said signal generator during a part of each revolution of said scanner and commutator drums, whereby scanning is restricted to the surface to be scanned.

5. In combination, a scanning drum for receiving a sheet having a surface including a portion with given reflective properties whose area is to be determined, said sheet surface having a dimension less than the circumference of said drum and wrapped around said drum with opposite edges of the sheet surface in circumferentially spaced relation on the drum, means responsive to said given light reflective properties, means for moving said responsive means relative to said drum in a helical path to scan the surface of said sheet carried thereby, means operatively associated with said responsive means for generating a numerical count indicating the area of said portion of the sheet surface, and means synchronized with rotation of said drum for automatically disabling said generating means during the portion of each revolution of said responsive means relative to said drum when said responsive means is scanning between the ends of said sheet surface.

6. In combination, a scanning drum for receiving a sheet having a surface including a portion with given reflective properties whose area is to be determined, said sheet surface having a dimension less than the circumference of said drum and wrapped around said drum with opposite edges of the sheet surface in circumferentially spaced relation on the drum, means responsive to said given light reflective properties, means for moving said responsive means relative to said drum in a helical path to scan the surface of said sheet carried thereby, means operatively associated with said responsive means for generating a numerical count indicating the area of said portion of the sheet surface, means for disabling said generating means during the portion of each revolution of said responsive means relative to said drum when said responsive means is scanning between the ends of said sheet surface, and second means for generating a numerical count proportional to the area of the entire surface of said sheet and controlled by said disabling means for interrupting counting during scanning between the ends of said sheet surface, whereby the proportion of the area of said surface having the given reflective properties may be determined.

7. In combination, a rotary scanning drum, a photoelectric scanning head for moving axially across said drum, a signal generator for generating a series of electric pulses, a coincident signal determining circuit connected with said signal generator and with said scanning head, a pulse counter connected to the output of said coincident signal determining circuit, and means for interrupting the series of electric pulses from said signal generator to said coincident signal determining circuit during a portion of each revolution of said scanning drum.

References Cited in the file of this patent

UNITED STATES PATENTS

1,195,583	Henretta	Aug. 22, 1916
2,138,668	Stewart	Nov. 29, 1938
2,184,162	Stockbarger et al.	Dec. 19, 1939
2,222,069	Cook	Nov. 19, 1940
2,356,761	Jones et al.	Aug. 29, 1944
2,360,883	Metcalf	Oct. 24, 1944
2,398,904	Libman et al.	Apr. 23, 1946
2,580,941	Morrison	Jan. 1, 1952

FOREIGN PATENTS

371,618	Germany	Mar. 17, 1923